Traffic Data Service

San Jose, CA
(408) 622-4787
tdsbay@cs.com

File Name : 1 FINAL
Site Code : 00000001
Start Date : 3/12/2019
Page No : 1

Groups Printed- Vehicles

	Southbound					CUESTA DR Westbound					ARBOLEDA DR Northbound					CUESTA DR Eastbound					
Start Time	Right	Thru	Left	Peds	App. Total	Right	Thru	Left	Peds	App. Total	Right	Thru	Left	Peds	App. Total	Right	Thru	Left	Peds	App. Total	Int. Total
07:00 AM	0	0	0	0	0	0	57	0	0	57	0	0	1	1	2	1	34	0	0	35	94
07:15 AM	0	0	0	0	0	0	79	0	0	79	0	0	1	0	1	1	59	0	0	60	140
07:30 AM	0	0	0	0	0	0	99	0	0	99	0	0	1	0	1	0	59	0	2	61	161
07:45 AM	0	0	0	0	0	0	101	1	1	103	1	0	2	0	3	1	97	0	0	98	204
Total	0	0	0	0	0	0	336	1	1	338	1	0	5	1	7	3	249	0	2	254	599
08:00 AM	0	0	0	0	0	0	115	1	0	116	1	0	2	1	4	13	107	0	0	120	240
08:15 AM	0	0	0	0	0	0	119	0	0	119	1	0	5	0	6	18	103	0	0	121	246
08:30 AM	0	0	0	0	0	0	125	1	0	126	3	0	4	0	7	7	108	0	1	116	249
08:45 AM	0	0	0	0	0	0	116	0	0	116	0	0	1	0	1	4	87	0	0	91	208
Total	0	0	0	0	0	0	475	2	0	477	5	0	12	1	18	42	405	0	1	448	943
09:00 AM	0	0	0	0	0	0	120	0	0	120	0	0	3	1	4	4	68	0	0	72	196
09:15 AM	0	0	0	0	0	0	98	0	0	98	0	0	2	1	3	3	93	0	0	96	197
09:30 AM	0	0	0	0	0	0	107	0	0	107	0	0	2	1	3	2	82	0	0	84	194
09:45 AM	0	0	0	0	0	0	125	0	0	125	0	0	0	0	0	2	96	0	1	99	224
Total	0	0	0	0	0	0	450	0	0	450	0	0	7	3	10	11	339	0	1	351	811
10:00 AM	0	0	0	0	0	0	132	1	0	133	0	0	2	0	2	0	82	0	0	82	217
10:15 AM	0	0	0	0	0	0	121	0	0	121	2	0	2	0	4	3	59	0	0	62	187
10:30 AM	0	0	0	0	0	0	113	1	0	114	1	0	0	0	1	3	52	0	0	55	170
10:45 AM	0	0	0	0	0	0	76	0	0	76	0	0	4	3	7	2	54	0	0	56	139
Total	0	0	0	0	0	0	442	2	0	444	3	0	8	3	14	8	247	0	0	255	713
11:00 AM	0	0	0	0	0	0	64	0	0	64	0	0	1	0	1	1	54	0	0	55	120
11:15 AM	0	0	0	0	0	0	59	0	0	59	0	0	4	1	5	2	55	0	0	57	121
11:30 AM	0	0	0	0	0	0	75	0	0	75	2	0	1	0	3	3	52	0	0	55	133
11:45 AM	0	0	0	0	0	0	69	0	0	69	1	0	2	0	3	5	60	0	0	65	137
Total	0	0	0	0	0	0	267	0	0	267	3	0	8	1	12	11	221	0	0	232	511
12:00 PM	0	0	0	0	0	0	61	0	0	61	0	0	2	1	3	3	62	0	0	65	129
12:15 PM	0	0	0	0	0	0	74	2	0	76	0	0	2	0	2	1	45	0	0	46	124
12:30 PM	0	0	0	0	0	0	53	2	0	55	0	0	0	0	0	2	52	0	0	54	109
12:45 PM	0	0	0	0	0	0	51	3	0	54	0	0	1	0	1	1	60	0	0	61	116
Total	0	0	0	0	0	0	239	7	0	246	0	0	5	1	6	7	219	0	0	226	478
01:00 PM	0	0	0	0	0	0	59	1	0	60	0	0	1	1	2	4	54	0	0	58	120
01:15 PM	0	0	0	0	0	0	48	0	0	48	0	0	0	2	2	2	48	0	0	50	100
01:30 PM	0	0	0	0	0	0	58	0	0	58	1	0	2	0	3	1	58	0	0	59	120
01:45 PM	0	0	0	0	0	0	54	1	0	55	0	0	2	0	2	5	52	0	0	57	114
Total	0	0	0	0	0	0	219	2	0	221	1	0	5	3	9	12	212	0	0	224	454
02:00 PM	0	0	0	0	0	0	62	0	0	62	0	0	2	0	2	1	55	0	0	56	120
02:15 PM	0	0	0	0	0	0	62	0	0	62	1	0	0	0	1	1	68	0	0	69	132
02:30 PM	0	0	0	0	0	0	61	0	0	61	0	0	1	1	2	9	67	0	0	76	139
02:45 PM	0	0	0	0	0	0	57	0	0	57	1	0	0	0	1	6	84	0	0	90	148
Total	0	0	0	0	0	0	242	0	0	242	2	0	3	1	6	17	274	0	0	291	539
03:00 PM	0	0	0	0	0	0	73	1	0	74	0	0	1	0	1	7	80	0	0	87	162
03:15 PM	0	0	0	0	0	0	61	0	0	61	0	0	2	4	6	3	105	0	0	108	175
03:30 PM	0	0	0	0	0	0	70	1	0	71	0	0	7	0	7	4	100	0	0	104	182
03:45 PM	0	0	0	0	0	0	59	0	0	59	0	0	0	1	1	8	90	0	0	98	158
Total	0	0	0	0	0	0	263	2	0	265	0	0	10	5	15	22	375	0	0	397	677
04:00 PM	0	0	0	0	0	0	69	1	0	70	2	0	2	1	5	9	103	0	0	112	187
04:15 PM	0	0	0	0	0	0	64	0	0	64	1	0	1	0	2	6	145	0	0	151	217

Traffic Data Service

San Jose, CA
(408) 622-4787
tdsbay@cs.com

File Name : 1 FINAL
Site Code : 00000001
Start Date : 3/12/2019
Page No : 2

Groups Printed- Vehicles

	Southbound					CUESTA DR Westbound					ARBOLEDA DR Northbound					CUESTA DR Eastbound					
Start Time	Right	Thru	Left	Peds	App. Total	Right	Thru	Left	Peds	App. Total	Right	Thru	Left	Peds	App. Total	Right	Thru	Left	Peds	App. Total	Int. Total
04:30 PM	0	0	0	0	0	0	56	1	0	57	0	0	0	0	0	9	116	0	0	125	182
04:45 PM	0	0	0	0	0	0	79	0	0	79	0	0	5	4	9	9	127	0	0	136	224
Total	0	0	0	0	0	0	268	2	0	270	3	0	8	5	16	33	491	0	0	524	810
05:00 PM	0	0	0	0	0	0	78	0	0	78	0	0	0	0	0	18	134	0	0	152	230
05:15 PM	0	0	0	0	0	0	87	0	0	87	1	0	1	0	2	11	107	0	0	118	207
05:30 PM	0	0	0	0	0	0	74	0	0	74	0	0	1	1	2	9	114	0	0	123	199
05:45 PM	0	0	0	0	0	0	69	0	0	69	0	0	0	0	0	6	130	0	0	136	205
Total	0	0	0	0	0	0	308	0	0	308	1	0	2	1	4	44	485	0	0	529	841
06:00 PM	0	0	0	0	0	0	69	0	0	69	0	0	0	0	0	9	145	0	0	154	223
06:15 PM	0	0	0	0	0	0	66	0	0	66	0	0	0	1	1	15	114	0	0	129	196
06:30 PM	0	0	0	0	0	0	93	0	0	93	0	0	1	0	1	6	85	0	0	91	185
06:45 PM	0	0	0	0	0	0	73	0	1	74	0	0	1	0	1	4	93	0	0	97	172
Total	0	0	0	0	0	0	301	0	1	302	0	0	2	1	3	34	437	0	0	471	776
Grand Total	0	0	0	0	0	0	3810	18	2	3830	19	0	75	26	120	244	3954	0	4	4202	8152
Apprch %	0	0	0	0		0	99.5	0.5	0.1		15.8	0	62.5	21.7		5.8	94.1	0	0.1		
Total %	0	0	0	0	0	0	46.7	0.2	0	47	0.2	0	0.9	0.3	1.5	3	48.5	0	0	51.5	

	Southbound				CUESTA DR Westbound				ARBOLEDA DR Northbound				CUESTA DR Eastbound				
Start Time	Right	Thru	Left	App. Total	Right	Thru	Left	App. Total	Right	Thru	Left	App. Total	Right	Thru	Left	App. Total	Int. Total
Peak Hour Analysis From 07:00 AM to 10:45 AM - Peak 1 of 1																	
Peak Hour for Entire Intersection Begins at 08:00 AM																	
08:00 AM	0	0	0	0	0	115	**1**	116	1	0	2	3	13	107	0	120	239
08:15 AM	0	0	0	0	0	119	0	119	1	0	**5**	6	**18**	103	0	**121**	246
08:30 AM	0	0	0	0	0	**125**	1	**126**	**3**	0	4	**7**	7	**108**	0	115	**248**
08:45 AM	0	0	0	0	0	116	0	116	0	0	1	1	4	87	0	91	208
Total Volume	0	0	0	0	0	475	2	477	5	0	12	17	42	405	0	447	941
% App. Total	0	0	0		0	99.6	0.4		29.4	0	70.6		9.4	90.6	0		
PHF	.000	.000	.000	.000	.000	.950	.500	.946	.417	.000	.600	.607	.583	.938	.000	.924	.949

Traffic Data Service

San Jose, CA
(408) 622-4787
tdsbay@cs.com

File Name : 1 FINAL
Site Code : 00000001
Start Date : 3/12/2019
Page No : 3

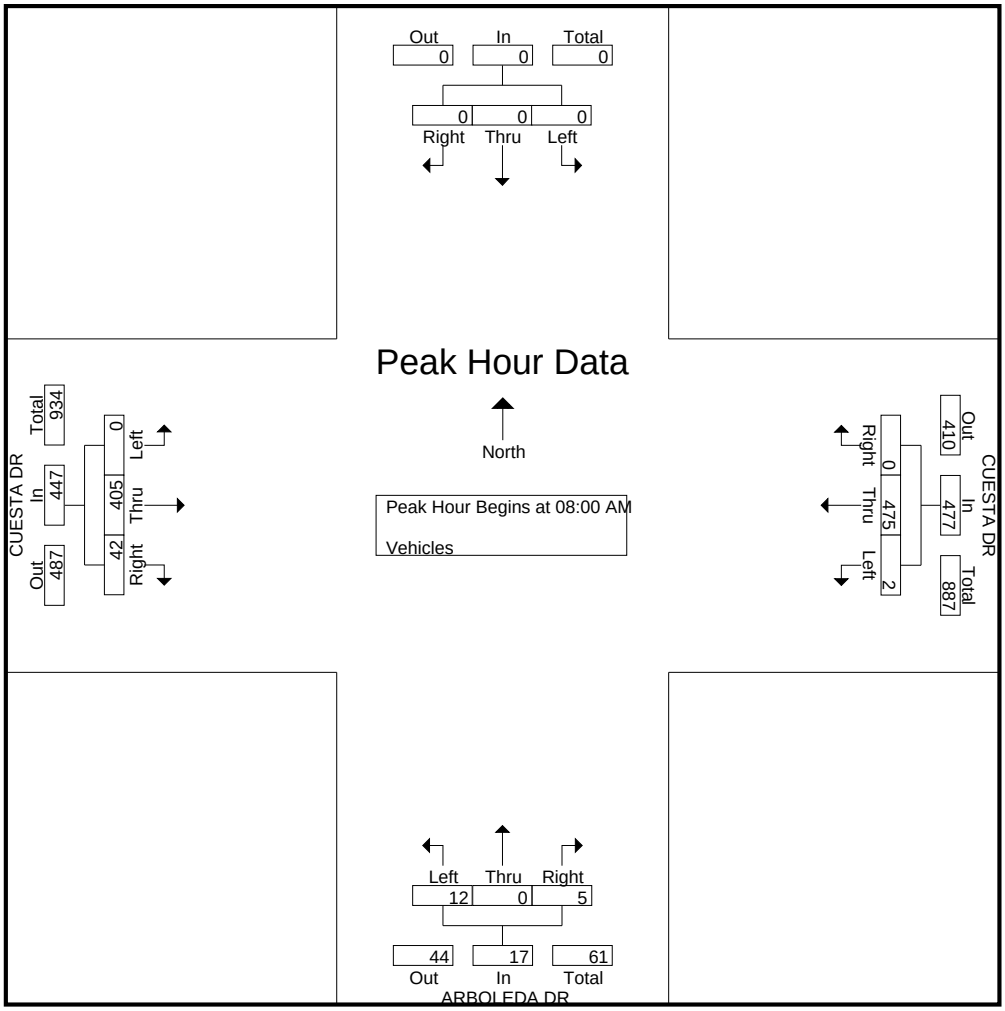

Peak Hour Analysis From 11:00 AM to 02:45 PM - Peak 1 of 1
Peak Hour for Entire Intersection Begins at 02:00 PM

02:00 PM	0	0	0	0	0	**62**	0	**62**	0	0	**2**	**2**	1	55	0	56	120
02:15 PM	0	0	0	0	0	62	0	62	**1**	0	0	1	1	68	0	69	132
02:30 PM	0	0	0	0	0	61	0	61	0	0	1	1	**9**	67	0	76	138
02:45 PM	0	0	0	0	0	57	0	57	1	0	0	1	6	**84**	0	**90**	**148**
Total Volume	0	0	0	0	0	242	0	242	2	0	3	5	17	274	0	291	538
% App. Total	0	0	0		0	100	0		40	0	60		5.8	94.2	0		
PHF	.000	.000	.000	.000	.000	.976	.000	.976	.500	.000	.375	.625	.472	.815	.000	.808	.909

Traffic Data Service

San Jose, CA
(408) 622-4787
tdsbay@cs.com

File Name : 1 FINAL
Site Code : 00000001
Start Date : 3/12/2019
Page No : 4

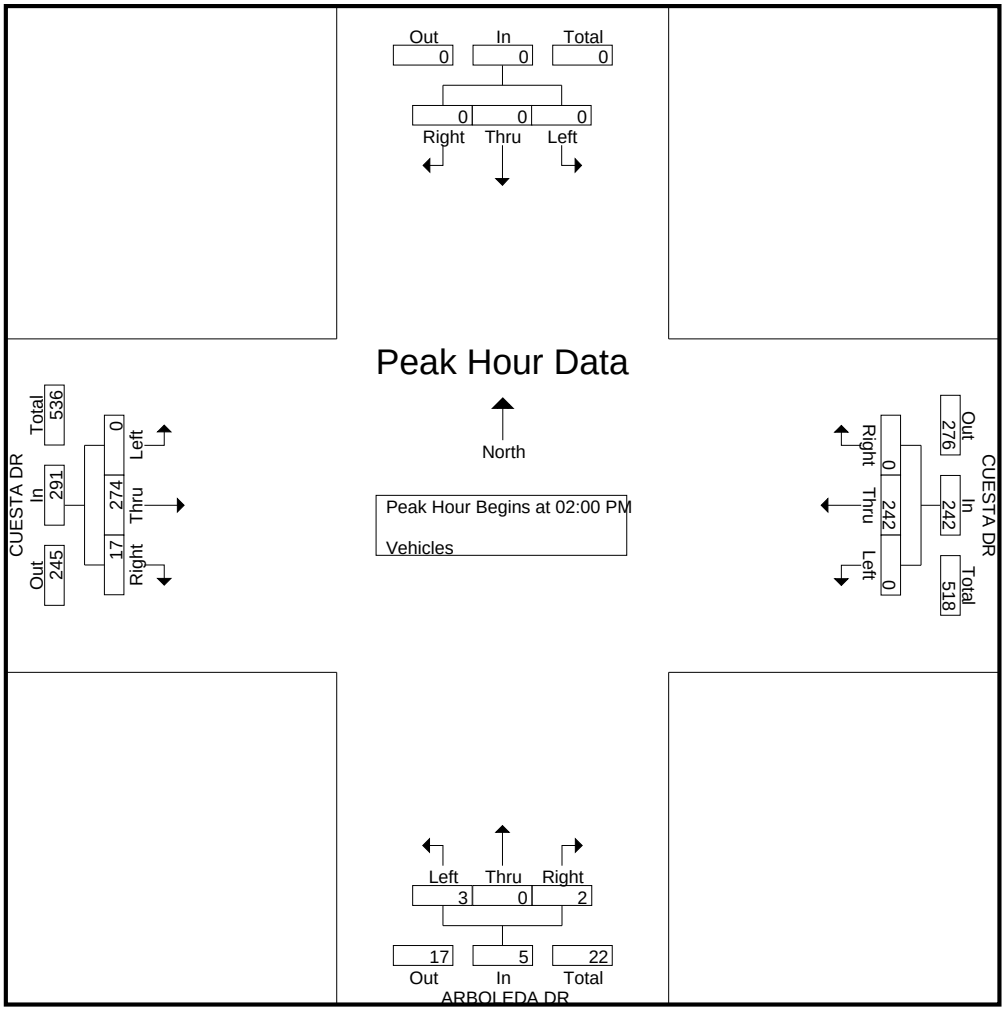

Peak Hour Analysis From 03:00 PM to 06:45 PM - Peak 1 of 1
Peak Hour for Entire Intersection Begins at 04:45 PM

04:45 PM	0	0	0	0	0	79	0	79	0	0	**5**	**5**	9	127	0	136	220
05:00 PM	0	0	0	0	0	78	0	78	0	0	0	0	**18**	**134**	0	**152**	**230**
05:15 PM	0	0	0	0	0	**87**	0	**87**	**1**	0	1	2	11	107	0	118	207
05:30 PM	0	0	0	0	0	74	0	74	0	0	1	1	9	114	0	123	198
Total Volume	0	0	0	0	0	318	0	318	1	0	7	8	47	482	0	529	855
% App. Total	0	0	0		0	100	0		12.5	0	87.5		8.9	91.1	0		
PHF	.000	.000	.000	.000	.000	.914	.000	.914	.250	.000	.350	.400	.653	.899	.000	.870	.929

Traffic Data Service

San Jose, CA
(408) 622-4787
tdsbay@cs.com

File Name : 1 FINAL
Site Code : 00000001
Start Date : 3/12/2019
Page No : 5

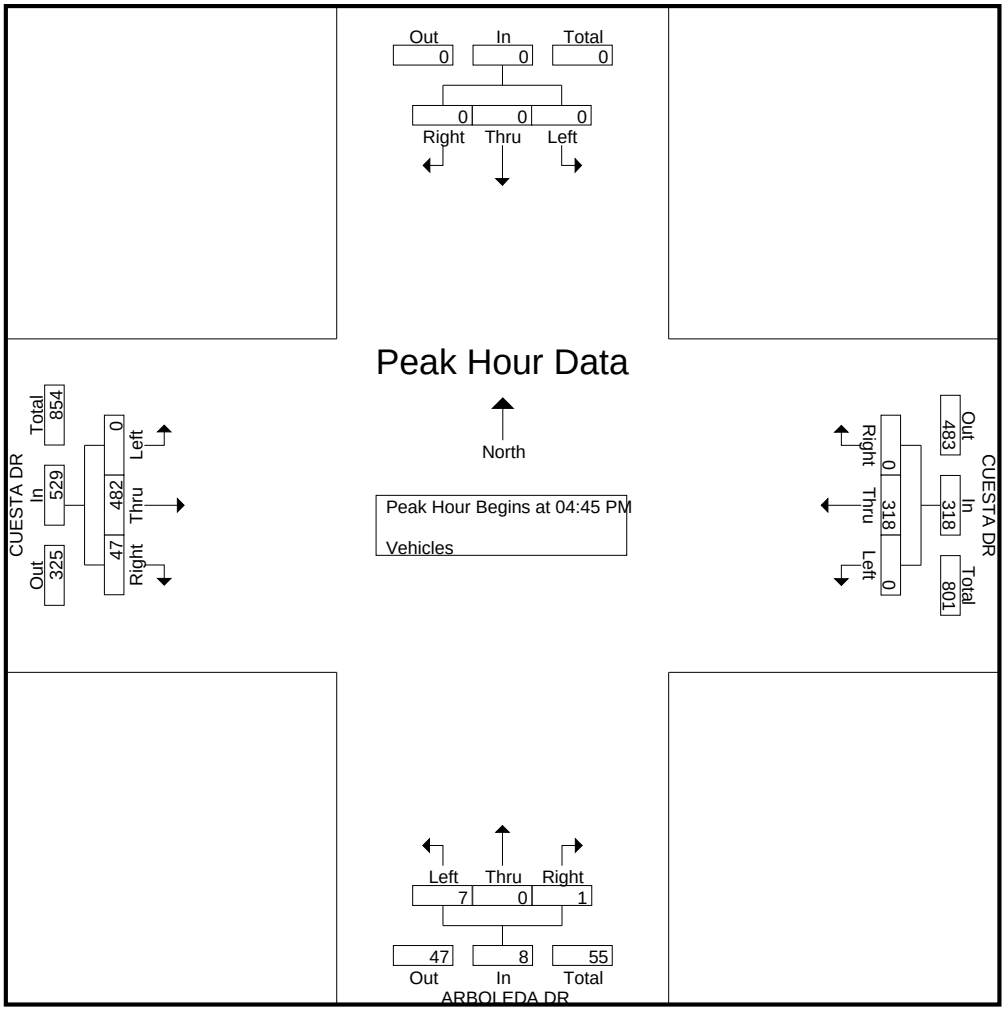

Peak Hour Analysis From 07:00 AM to 06:45 PM - Peak 1 of 1
Peak Hour for Entire Intersection Begins at 08:00 AM

08:00 AM	0	0	0	0	0	115	**1**	116	1	0	2	3	13	107	0	120	239
08:15 AM	0	0	0	0	0	119	0	119	1	0	**5**	6	**18**	103	0	**121**	246
08:30 AM	0	0	0	0	0	**125**	1	**126**	**3**	0	4	**7**	7	**108**	0	115	**248**
08:45 AM	0	0	0	0	0	116	0	116	0	0	1	1	4	87	0	91	208
Total Volume	0	0	0	0	0	475	2	477	5	0	12	17	42	405	0	447	941
% App. Total	0	0	0		0	99.6	0.4		29.4	0	70.6		9.4	90.6	0		
PHF	.000	.000	.000	.000	.000	.950	.500	.946	.417	.000	.600	.607	.583	.938	.000	.924	.949

Traffic Data Service

San Jose, CA
(408) 622-4787
tdsbay@cs.com

File Name : 1 FINAL
Site Code : 00000001
Start Date : 3/12/2019
Page No : 6

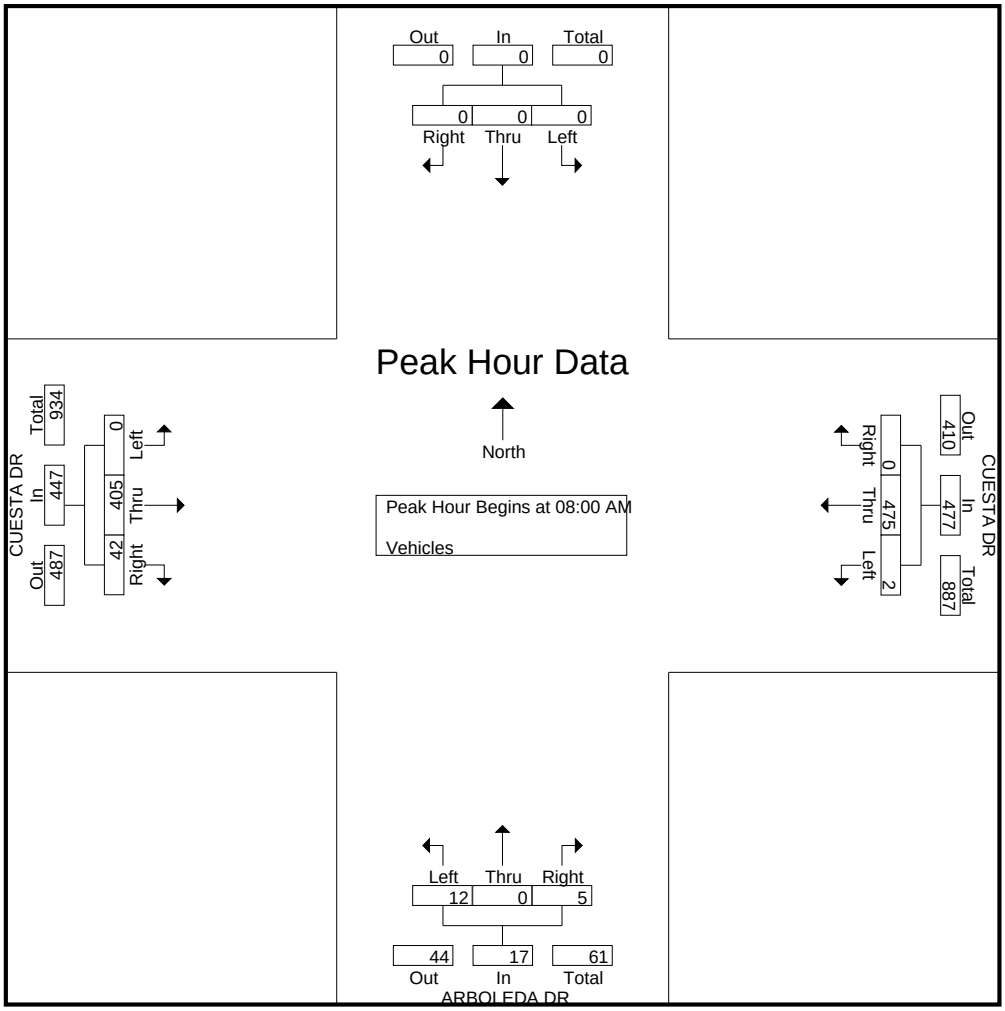

Traffic Data Service

San Jose, CA
(408) 622-4787
tdsbay@cs.com

File Name : 1 FINAL
Site Code : 00000001
Start Date : 3/12/2019
Page No : 1

Groups Printed- Bikes

	Southbound					CUESTA DR Westbound					ARBOLEDA DR Northbound					CUESTA DR Eastbound					
Start Time	Right	Thru	Left	Peds	App. Total	Right	Thru	Left	Peds	App. Total	Right	Thru	Left	Peds	App. Total	Right	Thru	Left	Peds	App. Total	Int. Total
07:00 AM	0	0	0	0	0	0	0	0	0	0	0	0	0	0	0	0	0	0	0	0	0
07:15 AM	0	0	0	0	0	0	2	0	0	2	0	0	0	0	0	0	0	0	0	0	2
07:30 AM	0	0	0	0	0	0	1	0	0	1	0	0	0	0	0	0	0	0	0	0	1
07:45 AM	0	0	0	0	0	0	0	0	0	0	0	0	0	0	0	0	2	0	0	2	2
Total	0	0	0	0	0	0	3	0	0	3	0	0	0	0	0	0	2	0	0	2	5
08:00 AM	0	0	0	0	0	0	3	0	0	3	0	0	0	0	0	0	1	0	0	1	4
08:15 AM	0	0	0	0	0	0	2	0	0	2	0	0	0	0	0	0	0	0	0	0	2
08:30 AM	0	0	0	0	0	0	3	0	0	3	0	0	1	0	1	0	2	0	0	2	6
08:45 AM	0	0	0	0	0	0	1	0	0	1	0	0	1	0	1	0	1	0	0	1	3
Total	0	0	0	0	0	0	9	0	0	9	0	0	2	0	2	0	4	0	0	4	15
09:00 AM	0	0	0	0	0	0	0	0	0	0	0	0	0	0	0	0	0	0	0	0	0
09:15 AM	0	0	0	0	0	0	0	0	0	0	0	0	0	0	0	0	0	0	0	0	0
09:30 AM	0	0	0	0	0	0	0	0	0	0	0	0	0	0	0	0	0	0	0	0	0
09:45 AM	0	0	0	0	0	0	0	0	0	0	0	0	0	0	0	0	0	0	0	0	0
Total	0	0	0	0	0	0	0	0	0	0	0	0	0	0	0	0	0	0	0	0	0
10:00 AM	0	0	0	0	0	0	1	0	0	1	0	0	0	0	0	1	1	0	0	2	3
10:15 AM	0	0	0	0	0	0	0	0	0	0	0	0	0	0	0	1	1	0	0	2	2
10:30 AM	0	0	0	0	0	0	1	0	0	1	0	0	0	0	0	0	0	0	0	0	1
10:45 AM	0	0	0	0	0	0	3	0	0	3	0	0	0	0	0	0	3	0	0	3	6
Total	0	0	0	0	0	0	5	0	0	5	0	0	0	0	0	2	5	0	0	7	12
11:00 AM	0	0	0	0	0	0	0	0	0	0	0	0	0	0	0	0	1	0	0	1	1
11:15 AM	0	0	0	0	0	0	0	0	0	0	0	0	0	0	0	0	0	0	0	0	0
11:30 AM	0	0	0	0	0	0	0	0	0	0	0	0	0	0	0	0	0	0	0	0	0
11:45 AM	0	0	0	0	0	0	1	0	0	1	0	0	0	0	0	0	0	0	0	0	1
Total	0	0	0	0	0	0	1	0	0	1	0	0	0	0	0	0	1	0	0	1	2
12:00 PM	0	0	0	0	0	0	0	0	0	0	0	0	0	0	0	0	0	0	0	0	0
12:15 PM	0	0	0	0	0	0	0	0	0	0	0	0	0	0	0	0	1	0	0	1	1
12:30 PM	0	0	0	0	0	0	0	0	0	0	0	0	0	0	0	0	1	0	0	1	1
12:45 PM	0	0	0	0	0	0	0	0	0	0	0	0	0	0	0	0	0	0	0	0	0
Total	0	0	0	0	0	0	0	0	0	0	0	0	0	0	0	0	2	0	0	2	2
01:00 PM	0	0	0	0	0	0	0	0	0	0	0	0	0	0	0	0	0	0	0	0	0
01:15 PM	0	0	0	0	0	0	0	0	0	0	0	0	0	0	0	0	1	0	0	1	1
01:30 PM	0	0	0	0	0	0	1	0	0	1	0	0	0	0	0	0	1	0	0	1	2
01:45 PM	0	0	0	0	0	0	1	0	0	1	0	0	0	0	0	0	0	0	0	0	1
Total	0	0	0	0	0	0	2	0	0	2	0	0	0	0	0	0	2	0	0	2	4
02:00 PM	0	0	0	0	0	0	0	0	0	0	0	0	0	0	0	0	0	0	0	0	0
02:15 PM	0	0	0	0	0	0	0	0	0	0	0	0	0	0	0	0	0	0	0	0	0
02:30 PM	0	0	0	0	0	0	3	0	0	3	0	0	0	0	0	0	0	0	0	0	3
02:45 PM	0	0	0	0	0	0	0	0	0	0	0	0	0	0	0	0	0	0	0	0	0
Total	0	0	0	0	0	0	3	0	0	3	0	0	0	0	0	0	0	0	0	0	3
03:00 PM	0	0	0	0	0	0	1	0	0	1	0	0	0	0	0	2	1	0	0	3	4
03:15 PM	0	0	0	0	0	0	0	0	0	0	0	0	0	0	0	2	0	0	0	2	2
03:30 PM	0	0	0	0	0	0	1	0	0	1	0	0	0	0	0	3	2	0	0	5	6
03:45 PM	0	0	0	0	0	0	0	0	0	0	0	0	0	0	0	0	2	0	0	2	2
Total	0	0	0	0	0	0	2	0	0	2	0	0	0	0	0	7	5	0	0	12	14
04:00 PM	0	0	0	0	0	0	0	0	0	0	0	0	0	0	0	1	1	0	0	2	2
04:15 PM	0	0	0	0	0	0	0	0	0	0	0	0	0	0	0	0	0	0	0	0	0

Traffic Data Service

San Jose, CA
(408) 622-4787
tdsbay@cs.com

File Name : 1 FINAL
Site Code : 00000001
Start Date : 3/12/2019
Page No : 2

Groups Printed- Bikes

	Southbound					CUESTA DR Westbound					ARBOLEDA DR Northbound					CUESTA DR Eastbound					
Start Time	Right	Thru	Left	Peds	App. Total	Right	Thru	Left	Peds	App. Total	Right	Thru	Left	Peds	App. Total	Right	Thru	Left	Peds	App. Total	Int. Total
04:30 PM	0	0	0	0	0	0	0	0	0	0	0	0	0	0	0	0	0	0	0	0	0
04:45 PM	0	0	0	0	0	0	0	0	0	0	0	0	0	0	0	0	3	0	0	3	3
Total	0	0	0	0	0	0	0	0	0	0	0	0	0	0	0	1	4	0	0	5	5
05:00 PM	0	0	0	0	0	0	1	0	0	1	0	0	0	0	0	0	3	0	0	3	4
05:15 PM	0	0	0	0	0	0	1	0	0	1	0	0	0	0	0	0	0	0	0	0	1
05:30 PM	0	0	0	0	0	0	0	0	0	0	0	0	0	0	0	1	3	0	0	4	4
05:45 PM	0	0	0	0	0	0	3	0	0	3	0	0	0	0	0	0	2	0	0	2	5
Total	0	0	0	0	0	0	5	0	0	5	0	0	0	0	0	1	8	0	0	9	14
06:00 PM	0	0	0	0	0	0	0	0	0	0	0	0	0	0	0	0	3	0	0	3	3
06:15 PM	0	0	0	0	0	0	0	0	0	0	0	0	0	0	0	0	0	0	0	0	0
06:30 PM	0	0	0	0	0	0	0	0	0	0	0	0	0	0	0	1	2	0	0	3	3
06:45 PM	0	0	0	0	0	0	0	0	0	0	0	0	0	0	0	0	1	0	0	1	1
Total	0	0	0	0	0	0	0	0	0	0	0	0	0	0	0	1	6	0	0	7	7
Grand Total	0	0	0	0	0	0	30	0	0	30	0	0	2	0	2	12	39	0	0	51	83
Apprch %	0	0	0	0		0	100	0	0		0	0	100	0		23.5	76.5	0	0		
Total %	0	0	0	0	0	0	36.1	0	0	36.1	0	0	2.4	0	2.4	14.5	47	0	0	61.4	

	Southbound				CUESTA DR Westbound				ARBOLEDA DR Northbound				CUESTA DR Eastbound				
Start Time	Right	Thru	Left	App. Total	Right	Thru	Left	App. Total	Right	Thru	Left	App. Total	Right	Thru	Left	App. Total	Int. Total
Peak Hour Analysis From 07:00 AM to 10:45 AM - Peak 1 of 1																	
Peak Hour for Entire Intersection Begins at 08:00 AM																	
08:00 AM	0	0	0	0	0	**3**	0	**3**	0	0	0	0	0	1	0	1	4
08:15 AM	0	0	0	0	0	2	0	2	0	0	0	0	0	0	0	0	2
08:30 AM	0	0	0	0	0	3	0	3	0	0	**1**	**1**	0	**2**	0	**2**	**6**
08:45 AM	0	0	0	0	0	1	0	1	0	0	1	1	0	1	0	1	3
Total Volume	0	0	0	0	0	9	0	9	0	0	2	2	0	4	0	4	15
% App. Total	0	0	0		0	100	0		0	0	100		0	100	0		
PHF	.000	.000	.000	.000	.000	.750	.000	.750	.000	.000	.500	.500	.000	.500	.000	.500	.625

Traffic Data Service

San Jose, CA
(408) 622-4787
tdsbay@cs.com

File Name : 1 FINAL
Site Code : 00000001
Start Date : 3/12/2019
Page No : 3

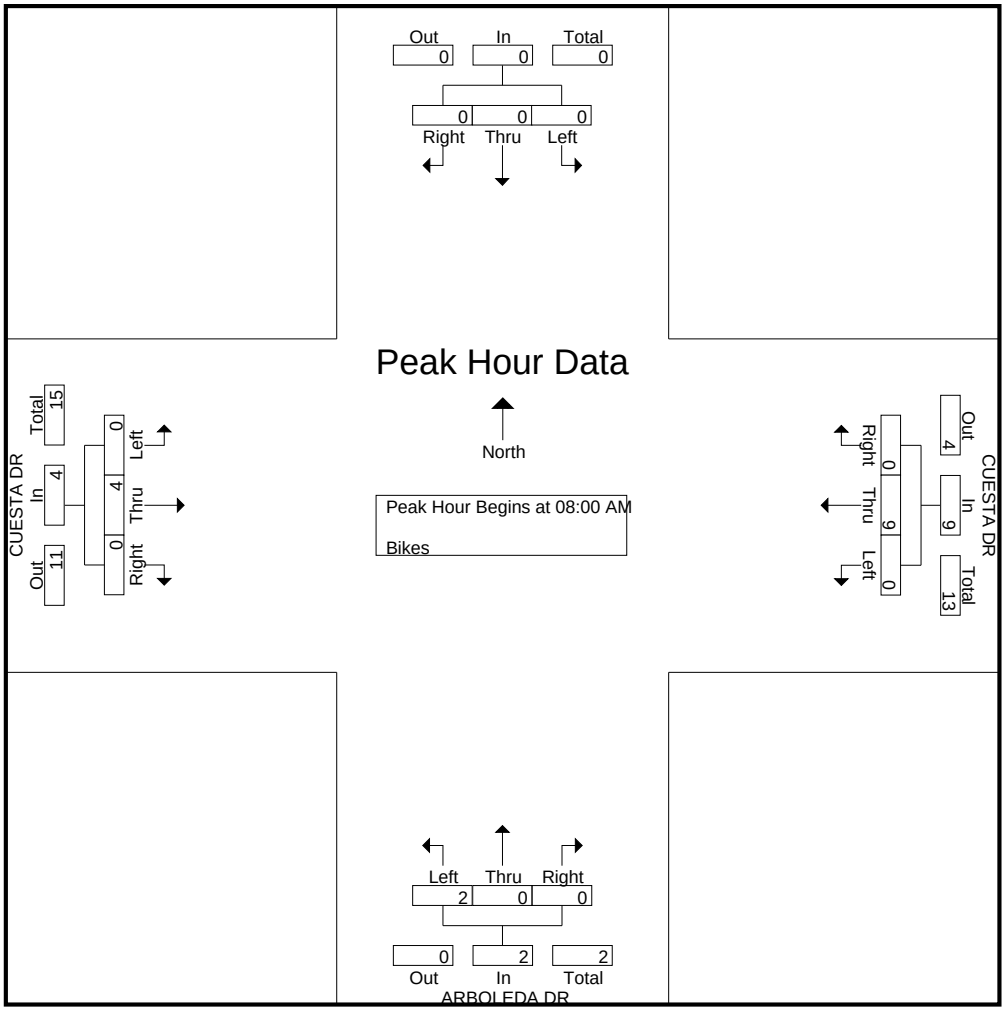

Peak Hour Analysis From 11:00 AM to 02:45 PM - Peak 1 of 1
Peak Hour for Entire Intersection Begins at 01:00 PM

01:00 PM	0	0	0	0	0	0	0	0	0	0	0	0	0	0	0	0	0
01:15 PM	0	0	0	0	0	0	0	0	0	0	0	0	0	**1**	0	**1**	1
01:30 PM	0	0	0	0	0	**1**	0	**1**	0	0	0	0	0	1	0	1	**2**
01:45 PM	0	0	0	0	0	1	0	1	0	0	0	0	0	0	0	0	1
Total Volume	0	0	0	0	0	2	0	2	0	0	0	0	0	2	0	2	4
% App. Total	0	0	0		0	100	0		0	0	0		0	100	0		
PHF	.000	.000	.000	.000	.000	.500	.000	.500	.000	.000	.000	.000	.000	.500	.000	.500	.500

Traffic Data Service

San Jose, CA
(408) 622-4787
tdsbay@cs.com

File Name : 1 FINAL
Site Code : 00000001
Start Date : 3/12/2019
Page No : 4

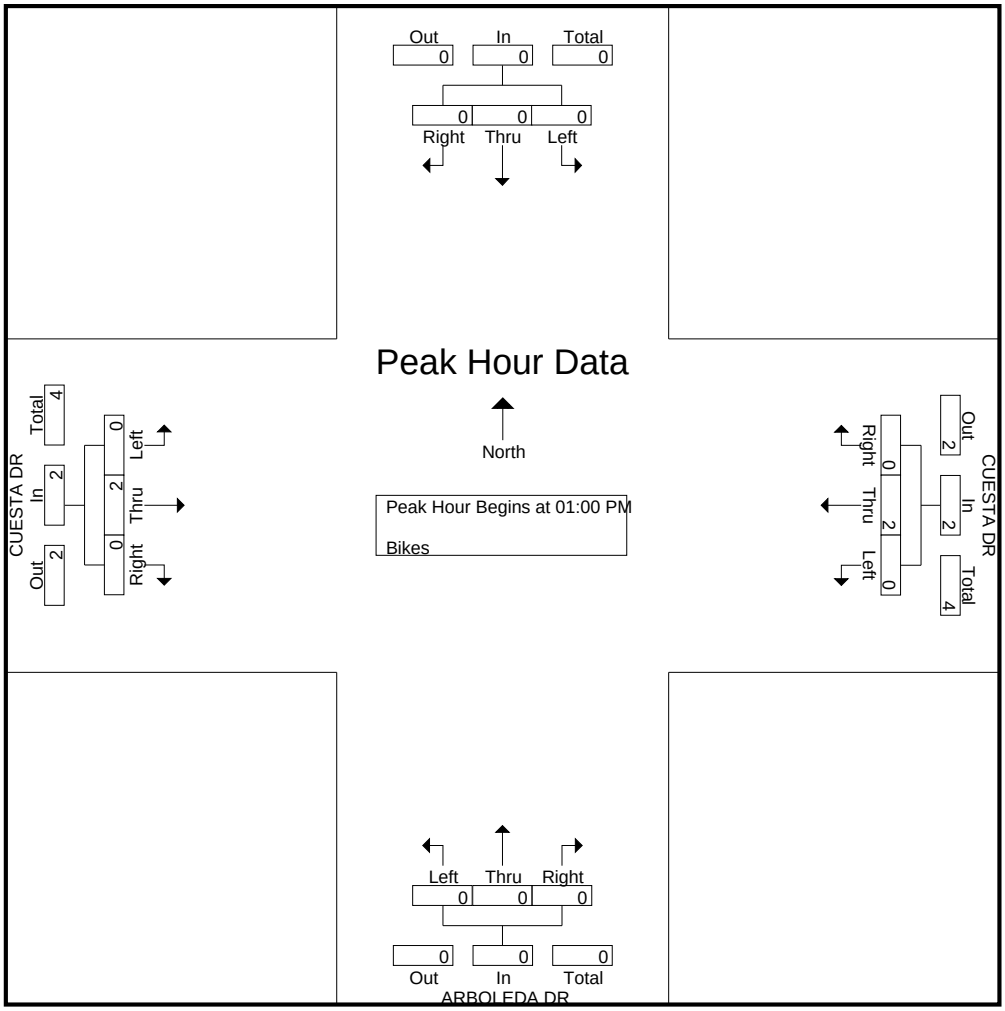

Peak Hour Analysis From 03:00 PM to 06:45 PM - Peak 1 of 1
Peak Hour for Entire Intersection Begins at 03:00 PM

03:00 PM	0	0	0	0	0	**1**	0	**1**	0	0	0	0	2	1	0	3	4
03:15 PM	0	0	0	0	0	0	0	0	0	0	0	0	2	0	0	2	2
03:30 PM	0	0	0	0	0	1	0	1	0	0	0	0	**3**	**2**	0	**5**	**6**
03:45 PM	0	0	0	0	0	0	0	0	0	0	0	0	0	2	0	2	2
Total Volume	0	0	0	0	0	2	0	2	0	0	0	0	7	5	0	12	14
% App. Total	0	0	0		0	100	0		0	0	0		58.3	41.7	0		
PHF	.000	.000	.000	.000	.000	.500	.000	.500	.000	.000	.000	.000	.583	.625	.000	.600	.583

Traffic Data Service

San Jose, CA
(408) 622-4787
tdsbay@cs.com

File Name : 1 FINAL
Site Code : 00000001
Start Date : 3/12/2019
Page No : 5

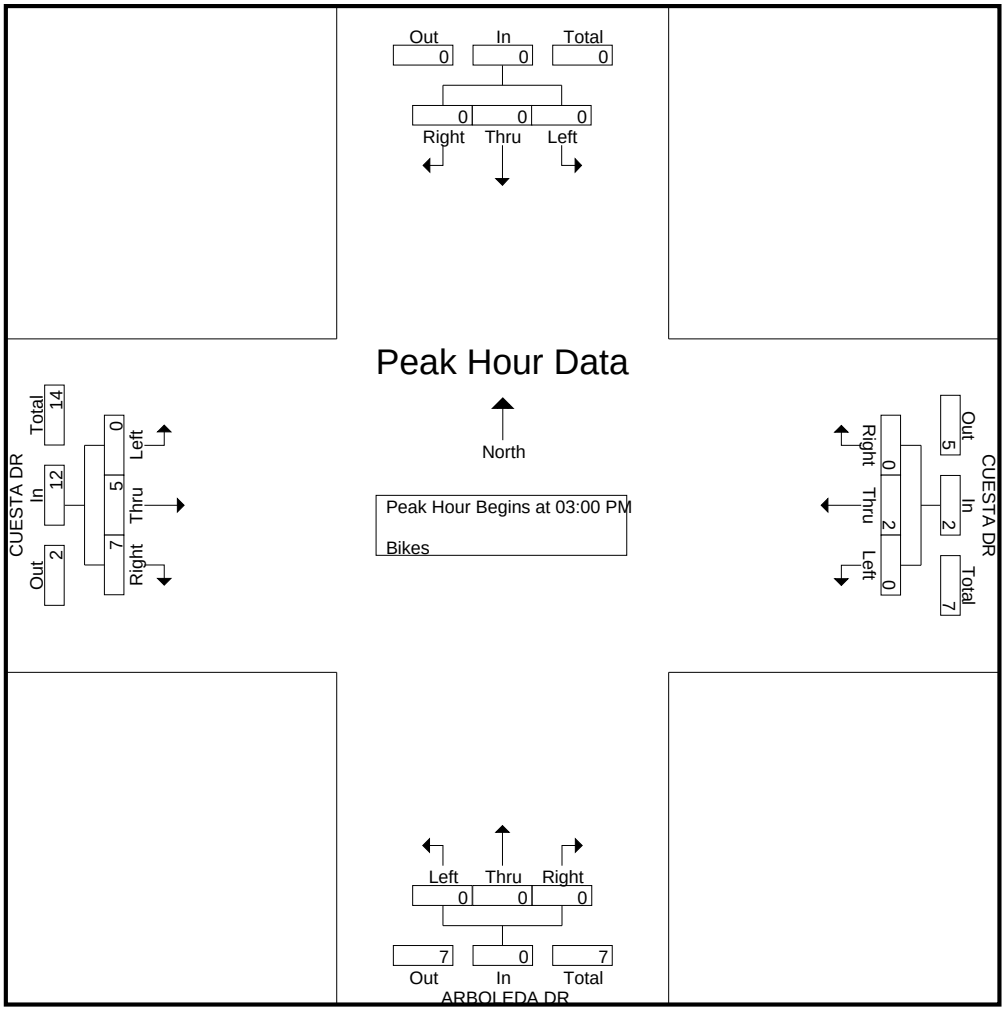

Peak Hour Analysis From 07:00 AM to 06:45 PM - Peak 1 of 1
Peak Hour for Entire Intersection Begins at 08:00 AM

08:00 AM	0	0	0	0	0	**3**	0	**3**	0	0	0	0	0	1	0	1	4
08:15 AM	0	0	0	0	0	2	0	2	0	0	0	0	0	0	0	0	2
08:30 AM	0	0	0	0	0	3	0	3	0	0	**1**	**1**	0	**2**	0	**2**	**6**
08:45 AM	0	0	0	0	0	1	0	1	0	0	1	1	0	1	0	1	3
Total Volume	0	0	0	0	0	9	0	9	0	0	2	2	0	4	0	4	15
% App. Total	0	0	0		0	100	0		0	0	100		0	100	0		
PHF	.000	.000	.000	.000	.000	.750	.000	.750	.000	.000	.500	.500	.000	.500	.000	.500	.625

Traffic Data Service

San Jose, CA
(408) 622-4787
tdsbay@cs.com

File Name : 1 FINAL
Site Code : 00000001
Start Date : 3/12/2019
Page No : 6

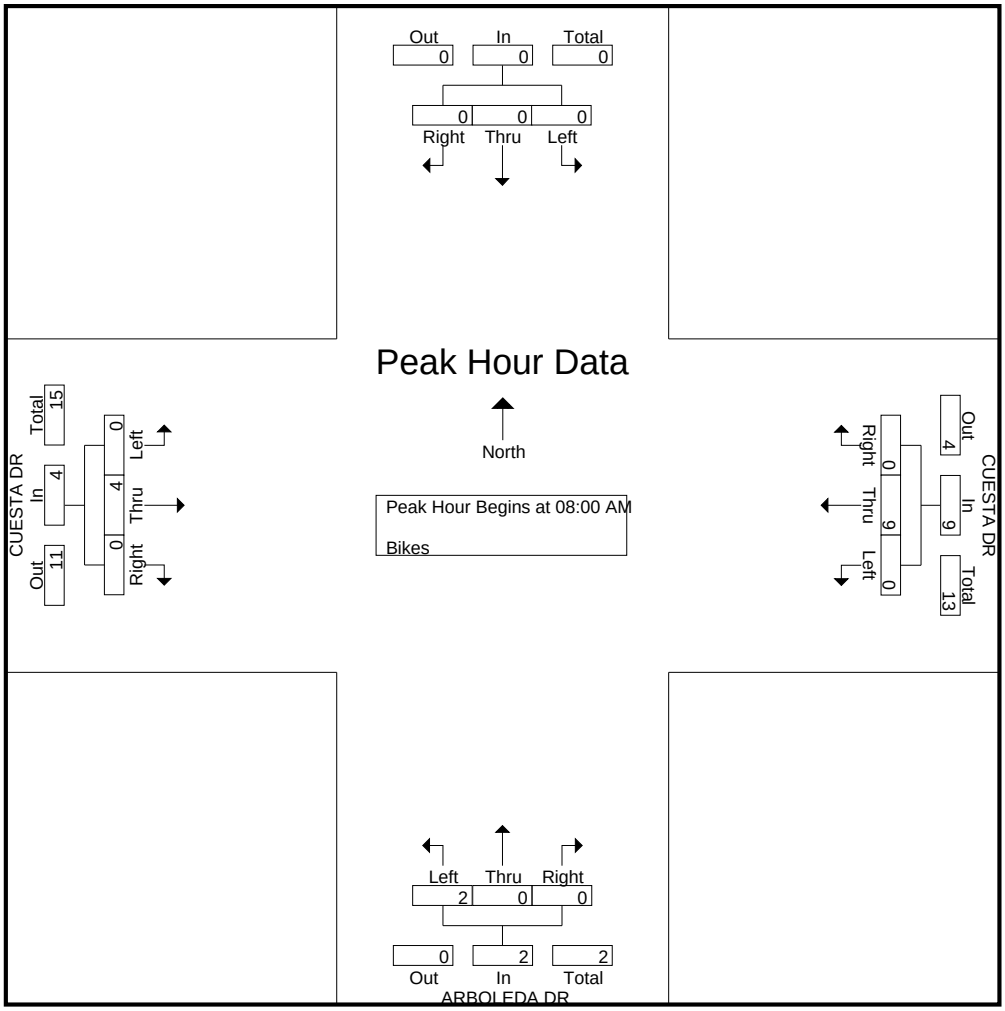

Traffic Data Service

San Jose, CA
(408) 622-4787
tdsbay@cs.com

File Name : 2 FINAL
Site Code : 00000002
Start Date : 3/12/2019
Page No : 1

Groups Printed- Vehicles

	Southbound					CUESTA DR Westbound					CAMPBELL AVE Northbound					CUESTA DR Eastbound					
Start Time	Right	Thru	Left	Peds	App. Total	Right	Thru	Left	Peds	App. Total	Right	Thru	Left	Peds	App. Total	Right	Thru	Left	Peds	App. Total	Int. Total
07:00 AM	0	0	0	0	0	0	50	3	0	53	2	0	9	0	11	3	33	0	0	36	100
07:15 AM	0	0	0	0	0	0	74	3	0	77	5	0	7	0	12	4	53	0	0	57	146
07:30 AM	0	0	0	0	0	0	91	2	0	93	10	0	9	0	19	10	52	0	0	62	174
07:45 AM	0	0	0	0	0	0	83	17	0	100	28	0	17	0	45	14	86	0	0	100	245
Total	0	0	0	0	0	0	298	25	0	323	45	0	42	0	87	31	224	0	0	255	665
08:00 AM	0	0	0	0	0	0	94	34	0	128	21	0	21	1	43	26	82	0	3	111	282
08:15 AM	0	0	0	0	0	0	87	48	0	135	22	0	37	0	59	23	75	0	13	111	305
08:30 AM	0	0	0	0	0	0	91	14	0	105	28	0	29	0	57	10	104	0	3	117	279
08:45 AM	0	0	0	0	0	0	103	7	0	110	13	0	18	0	31	11	70	0	3	84	225
Total	0	0	0	0	0	0	375	103	0	478	84	0	105	1	190	70	331	0	22	423	1091
09:00 AM	0	0	0	0	0	0	103	6	0	109	11	0	12	0	23	7	65	0	1	73	205
09:15 AM	0	0	0	0	0	0	81	2	0	83	7	0	13	0	20	5	93	0	0	98	201
09:30 AM	0	0	0	0	0	0	95	5	0	100	3	0	16	0	19	7	75	0	2	84	203
09:45 AM	0	0	0	0	0	0	103	6	0	109	6	0	14	0	20	4	94	0	0	98	227
Total	0	0	0	0	0	0	382	19	0	401	27	0	55	0	82	23	327	0	3	353	836
10:00 AM	0	0	0	0	0	0	117	3	0	120	8	0	15	0	23	5	74	0	0	79	222
10:15 AM	0	0	0	0	0	0	106	2	0	108	3	0	17	0	20	7	58	0	2	67	195
10:30 AM	0	0	0	0	0	0	109	3	0	112	4	0	4	0	8	5	44	0	0	49	169
10:45 AM	0	0	0	0	0	0	65	3	0	68	6	0	9	1	16	5	52	0	1	58	142
Total	0	0	0	0	0	0	397	11	0	408	21	0	45	1	67	22	228	0	3	253	728
11:00 AM	0	0	0	0	0	0	61	3	0	64	8	0	4	0	12	10	44	0	0	54	130
11:15 AM	0	0	0	0	0	0	53	4	0	57	15	0	5	0	20	11	45	0	0	56	133
11:30 AM	0	0	0	0	0	0	65	3	0	68	3	0	11	0	14	4	50	0	0	54	136
11:45 AM	0	0	0	0	0	0	65	4	0	69	9	0	5	0	14	16	43	0	2	61	144
Total	0	0	0	0	0	0	244	14	0	258	35	0	25	0	60	41	182	0	2	225	543
12:00 PM	0	0	0	0	0	0	47	6	0	53	5	0	9	1	15	8	54	0	0	62	130
12:15 PM	0	0	0	0	0	0	66	5	0	71	4	0	12	0	16	7	37	0	1	45	132
12:30 PM	0	0	0	0	0	0	49	5	0	54	7	0	5	0	12	6	47	0	0	53	119
12:45 PM	0	0	0	0	0	0	46	3	0	49	7	0	10	0	17	8	54	0	0	62	128
Total	0	0	0	0	0	0	208	19	0	227	23	0	36	1	60	29	192	0	1	222	509
01:00 PM	0	0	0	0	0	0	55	2	0	57	4	0	7	0	11	5	47	0	0	52	120
01:15 PM	0	0	0	0	0	0	43	5	0	48	3	0	6	2	11	4	46	0	2	52	111
01:30 PM	0	0	0	0	0	0	50	5	0	55	7	0	7	0	14	6	51	0	1	58	127
01:45 PM	0	0	0	0	0	0	44	8	0	52	4	0	9	0	13	8	47	0	0	55	120
Total	0	0	0	0	0	0	192	20	0	212	18	0	29	2	49	23	191	0	3	217	478
02:00 PM	0	0	0	0	0	0	57	3	0	60	10	0	7	0	17	12	44	0	0	56	133
02:15 PM	0	0	0	0	0	0	56	8	0	64	5	0	5	0	10	11	59	0	0	70	144
02:30 PM	0	0	0	0	0	0	51	10	0	61	8	0	9	0	17	12	52	0	2	66	144
02:45 PM	0	0	0	0	0	0	47	30	0	77	7	0	13	0	20	30	57	0	1	88	185
Total	0	0	0	0	0	0	211	51	0	262	30	0	34	0	64	65	212	0	3	280	606
03:00 PM	0	0	0	0	0	0	58	14	0	72	30	0	13	0	43	21	58	0	7	86	201
03:15 PM	0	0	0	0	0	0	45	11	0	56	10	0	16	1	27	16	84	0	3	103	186
03:30 PM	0	0	0	0	0	0	53	8	0	61	13	0	17	0	30	20	85	0	4	109	200
03:45 PM	0	0	0	0	0	0	42	11	0	53	4	0	16	1	21	14	78	0	4	96	170
Total	0	0	0	0	0	0	198	44	0	242	57	0	62	2	121	71	305	0	18	394	757
04:00 PM	0	0	0	0	0	0	61	8	0	69	5	0	7	0	12	22	78	0	2	102	183
04:15 PM	0	0	0	0	0	0	50	12	0	62	6	0	16	0	22	16	127	0	2	145	229

Traffic Data Service

San Jose, CA
(408) 622-4787
tdsbay@cs.com

File Name : 2 FINAL
Site Code : 00000002
Start Date : 3/12/2019
Page No : 2

Groups Printed- Vehicles

	Southbound					CUESTA DR Westbound					CAMPBELL AVE Northbound					CUESTA DR Eastbound					
Start Time	Right	Thru	Left	Peds	App. Total	Right	Thru	Left	Peds	App. Total	Right	Thru	Left	Peds	App. Total	Right	Thru	Left	Peds	App. Total	Int. Total
04:30 PM	0	0	0	0	0	0	51	7	0	58	10	0	6	0	16	16	100	0	0	116	190
04:45 PM	0	0	0	0	0	0	68	16	0	84	13	0	12	3	28	14	108	0	1	123	235
Total	0	0	0	0	0	0	230	43	0	273	34	0	41	3	78	68	413	0	5	486	837
05:00 PM	0	0	0	0	0	0	68	10	0	78	12	0	9	0	21	36	105	0	0	141	240
05:15 PM	0	0	0	0	0	0	72	11	0	83	1	0	15	0	16	38	70	0	2	110	209
05:30 PM	0	0	0	0	0	0	62	16	0	78	6	0	14	1	21	25	93	0	1	119	218
05:45 PM	0	0	0	0	0	0	66	10	0	76	9	0	6	0	15	29	95	0	0	124	215
Total	0	0	0	0	0	0	268	47	0	315	28	0	44	1	73	128	363	0	3	494	882
06:00 PM	0	0	0	0	0	0	59	7	0	66	5	0	6	0	11	16	120	0	2	138	215
06:15 PM	0	0	0	0	0	0	63	16	0	79	5	0	4	2	11	14	107	0	3	124	214
06:30 PM	0	0	0	0	0	0	83	15	0	98	8	0	12	0	20	14	73	0	0	87	205
06:45 PM	0	0	0	0	0	0	63	12	0	75	8	0	7	0	15	10	83	0	1	94	184
Total	0	0	0	0	0	0	268	50	0	318	26	0	29	2	57	54	383	0	6	443	818
Grand Total	0	0	0	0	0	0	3271	446	0	3717	428	0	547	13	988	625	3351	0	69	4045	8750
Apprch %	0	0	0	0		0	88	12	0		43.3	0	55.4	1.3		15.5	82.8	0	1.7		
Total %	0	0	0	0	0	0	37.4	5.1	0	42.5	4.9	0	6.3	0.1	11.3	7.1	38.3	0	0.8	46.2	

	Southbound				CUESTA DR Westbound				CAMPBELL AVE Northbound				CUESTA DR Eastbound				
Start Time	Right	Thru	Left	App. Total	Right	Thru	Left	App. Total	Right	Thru	Left	App. Total	Right	Thru	Left	App. Total	Int. Total
Peak Hour Analysis From 07:00 AM to 10:45 AM - Peak 1 of 1																	
Peak Hour for Entire Intersection Begins at 07:45 AM																	
07:45 AM	0	0	0	0	0	83	17	100	**28**	0	17	45	14	86	0	100	245
08:00 AM	0	0	0	0	0	**94**	34	128	21	0	21	42	**26**	82	0	108	278
08:15 AM	0	0	0	0	0	87	**48**	**135**	22	0	**37**	**59**	23	75	0	98	**292**
08:30 AM	0	0	0	0	0	91	14	105	28	0	29	57	10	**104**	0	**114**	276
Total Volume	0	0	0	0	0	355	113	468	99	0	104	203	73	347	0	420	1091
% App. Total	0	0	0		0	75.9	24.1		48.8	0	51.2		17.4	82.6	0		
PHF	.000	.000	.000	.000	.000	.944	.589	.867	.884	.000	.703	.860	.702	.834	.000	.921	.934

Traffic Data Service

San Jose, CA
(408) 622-4787
tdsbay@cs.com

File Name : 2 FINAL
Site Code : 00000002
Start Date : 3/12/2019
Page No : 3

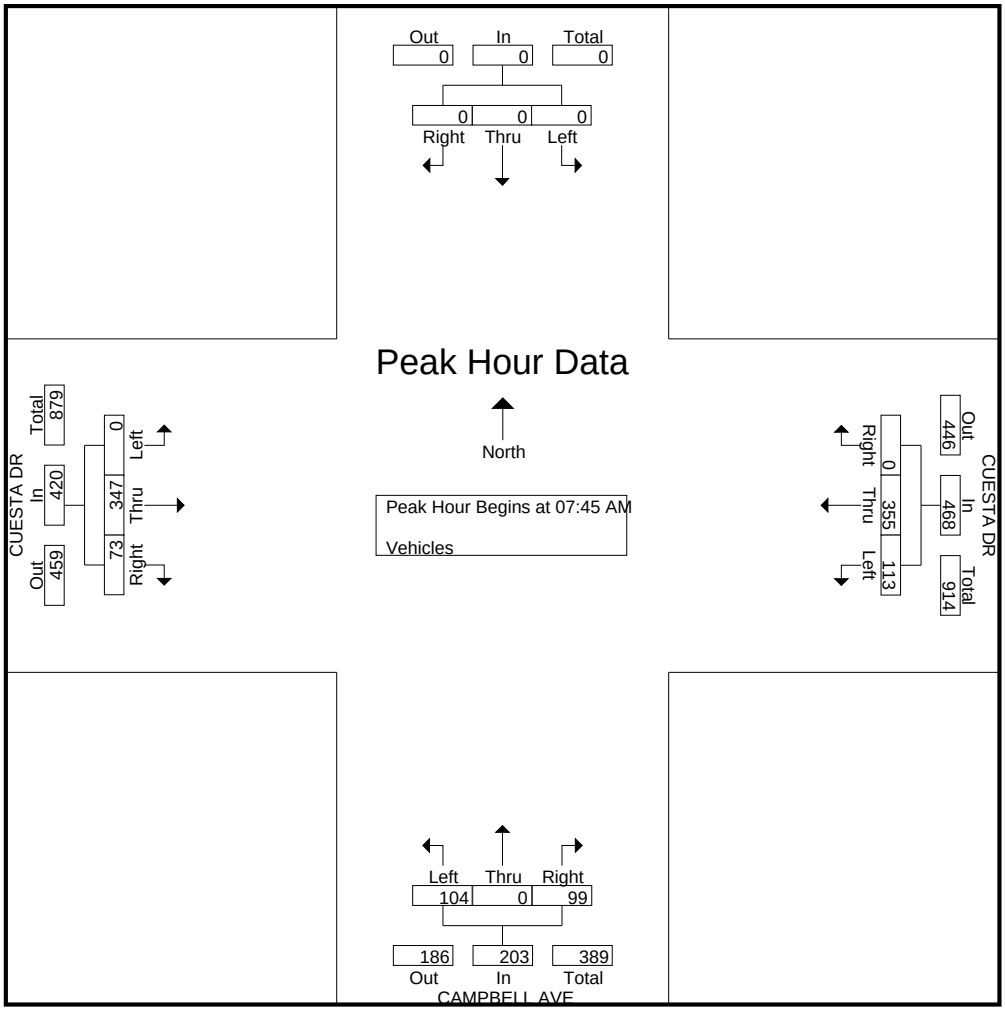

Peak Hour Analysis From 11:00 AM to 02:45 PM - Peak 1 of 1
Peak Hour for Entire Intersection Begins at 02:00 PM

02:00 PM	0	0	0	0	0	**57**	3	60	**10**	0	7	17	12	44	0	56	133
02:15 PM	0	0	0	0	0	56	8	64	5	0	5	10	11	**59**	0	70	144
02:30 PM	0	0	0	0	0	51	10	61	8	0	9	17	12	52	0	64	142
02:45 PM	0	0	0	0	0	47	**30**	**77**	7	0	**13**	**20**	**30**	57	0	**87**	**184**
Total Volume	0	0	0	0	0	211	51	262	30	0	34	64	65	212	0	277	603
% App. Total	0	0	0		0	80.5	19.5		46.9	0	53.1		23.5	76.5	0		
PHF	.000	.000	.000	.000	.000	.925	.425	.851	.750	.000	.654	.800	.542	.898	.000	.796	.819

Traffic Data Service

San Jose, CA
(408) 622-4787
tdsbay@cs.com

File Name : 2 FINAL
Site Code : 00000002
Start Date : 3/12/2019
Page No : 4

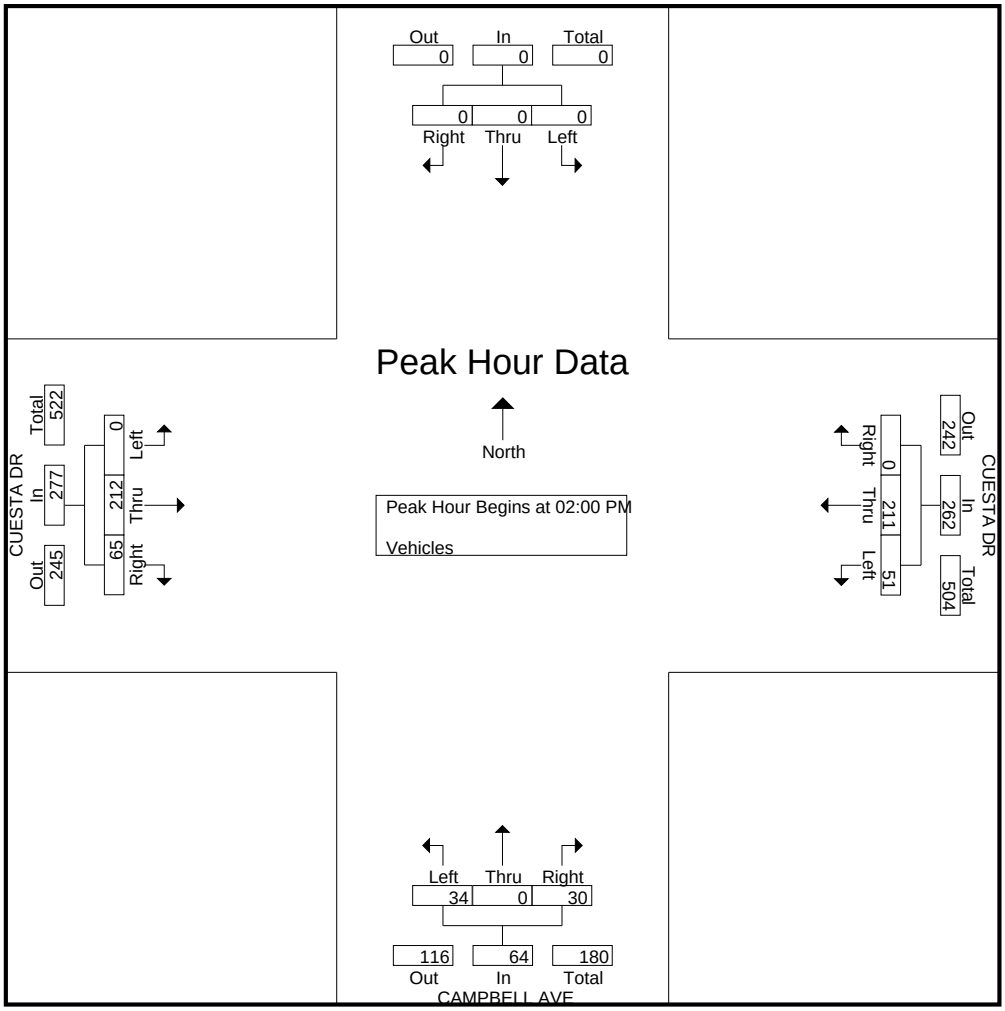

Peak Hour Analysis From 03:00 PM to 06:45 PM - Peak 1 of 1
Peak Hour for Entire Intersection Begins at 04:45 PM

04:45 PM	0	0	0	0	0	68	**16**	**84**	**13**	0	12	**25**	14	**108**	0	122	231
05:00 PM	0	0	0	0	0	68	10	78	12	0	9	21	36	105	0	**141**	**240**
05:15 PM	0	0	0	0	0	**72**	11	83	1	0	**15**	16	**38**	70	0	108	207
05:30 PM	0	0	0	0	0	62	16	78	6	0	14	20	25	93	0	118	216
Total Volume	0	0	0	0	0	270	53	323	32	0	50	82	113	376	0	489	894
% App. Total	0	0	0		0	83.6	16.4		39	0	61		23.1	76.9	0		
PHF	.000	.000	.000	.000	.000	.938	.828	.961	.615	.000	.833	.820	.743	.870	.000	.867	.931

Traffic Data Service

San Jose, CA
(408) 622-4787
tdsbay@cs.com

File Name : 2 FINAL
Site Code : 00000002
Start Date : 3/12/2019
Page No : 5

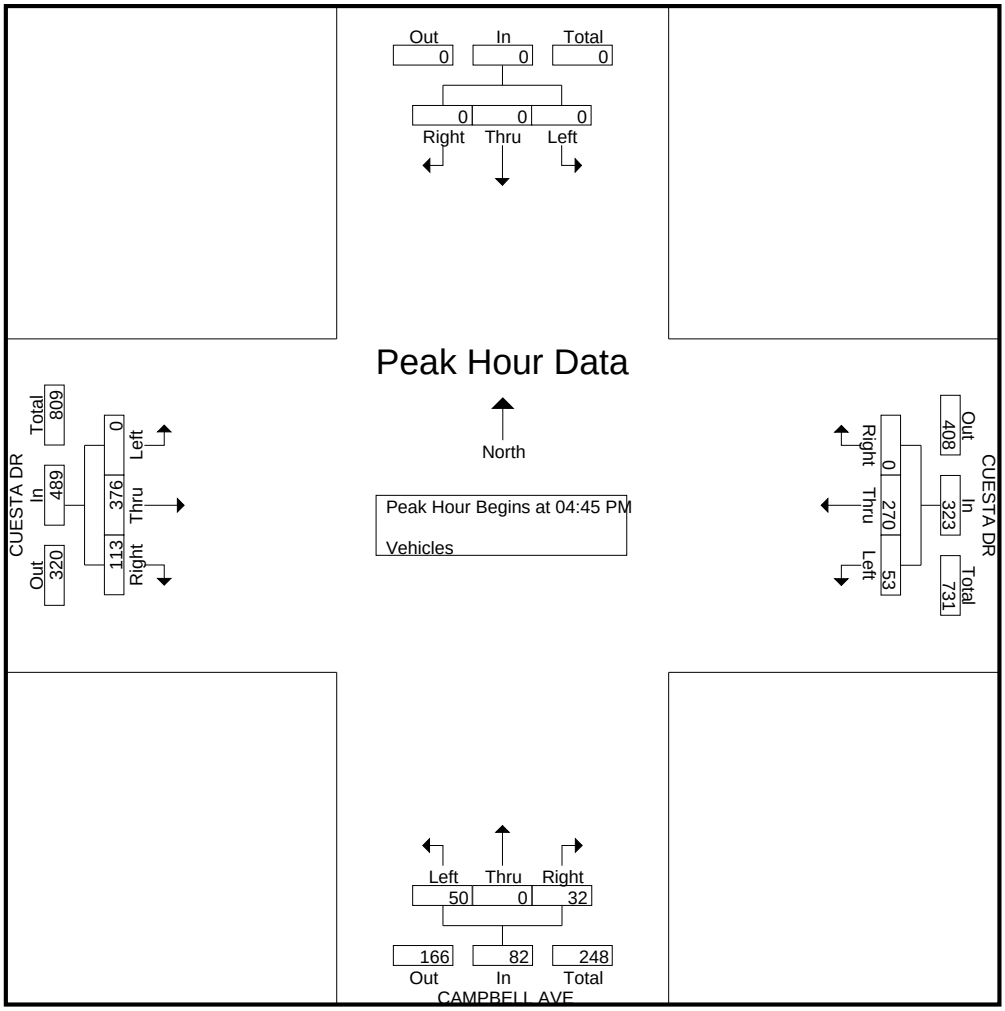

Peak Hour Analysis From 07:00 AM to 06:45 PM - Peak 1 of 1
Peak Hour for Entire Intersection Begins at 07:45 AM

07:45 AM	0	0	0	0	0	83	17	100	**28**	0	17	45	14	86	0	100	245
08:00 AM	0	0	0	0	0	**94**	34	128	21	0	21	42	**26**	82	0	108	278
08:15 AM	0	0	0	0	0	87	**48**	**135**	22	0	**37**	**59**	23	75	0	98	**292**
08:30 AM	0	0	0	0	0	91	14	105	28	0	29	57	10	**104**	0	**114**	276
Total Volume	0	0	0	0	0	355	113	468	99	0	104	203	73	347	0	420	1091
% App. Total	0	0	0		0	75.9	24.1		48.8	0	51.2		17.4	82.6	0		
PHF	.000	.000	.000	.000	.000	.944	.589	.867	.884	.000	.703	.860	.702	.834	.000	.921	.934

Traffic Data Service

San Jose, CA
(408) 622-4787
tdsbay@cs.com

File Name : 2 FINAL
Site Code : 00000002
Start Date : 3/12/2019
Page No : 6

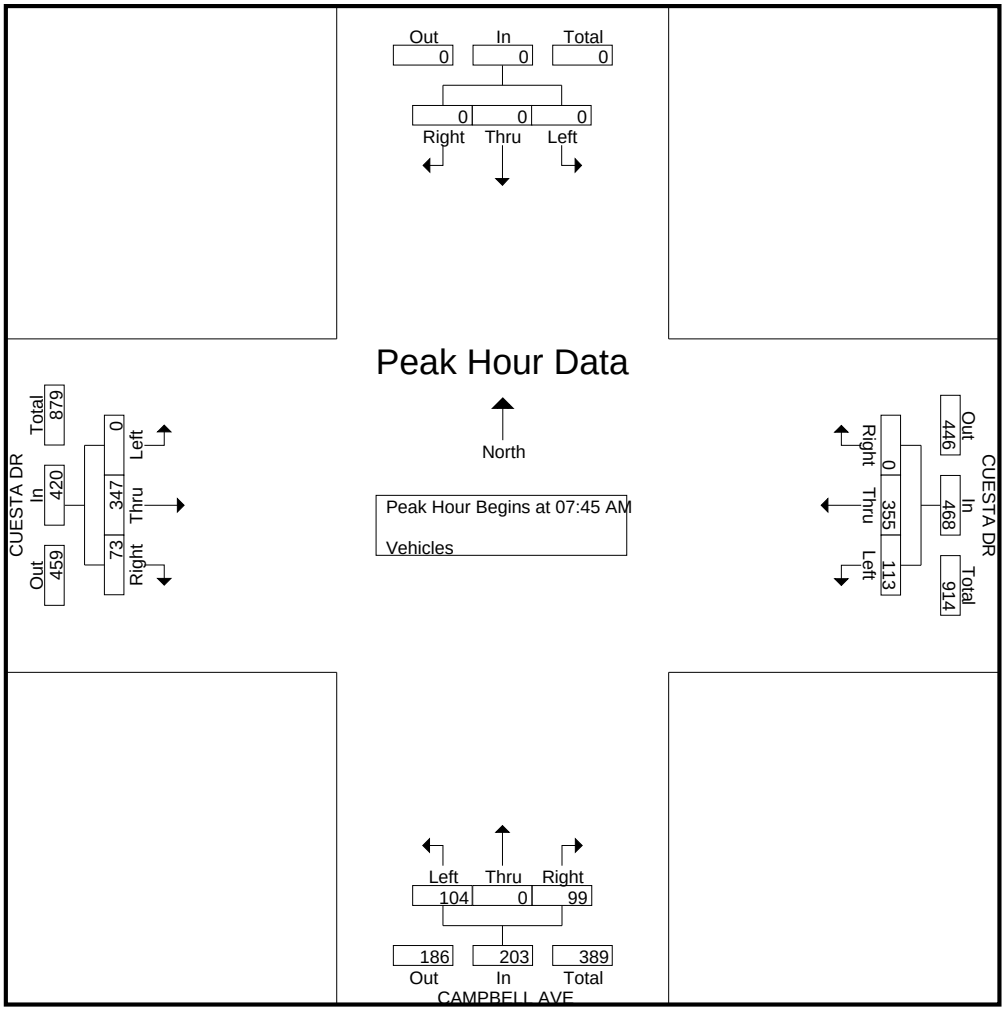

Traffic Data Service

San Jose, CA
(408) 622-4787
tdsbay@cs.com

File Name : 2 FINAL
Site Code : 00000002
Start Date : 3/12/2019
Page No : 1

Groups Printed- Bikes

	Southbound					CUESTA DR Westbound					CAMPBELL AVE Northbound					CUESTA DR Eastbound					
Start Time	Right	Thru	Left	Peds	App. Total	Right	Thru	Left	Peds	App. Total	Right	Thru	Left	Peds	App. Total	Right	Thru	Left	Peds	App. Total	Int. Total
07:00 AM	0	0	0	0	0	0	0	0	0	0	0	0	0	0	0	0	0	0	0	0	0
07:15 AM	0	0	0	0	0	0	2	0	0	2	1	0	0	0	1	0	0	0	0	0	3
07:30 AM	0	0	0	0	0	0	1	1	0	2	4	0	0	0	4	0	0	0	0	0	6
07:45 AM	0	0	0	0	0	0	0	0	0	0	5	0	0	0	5	0	3	0	0	3	8
Total	0	0	0	0	0	0	3	1	0	4	10	0	0	0	10	0	3	0	0	3	17
08:00 AM	0	0	0	0	0	0	3	3	0	6	2	0	1	0	3	0	1	0	0	1	10
08:15 AM	0	0	0	0	0	0	2	0	0	2	0	0	0	0	0	0	0	0	0	0	2
08:30 AM	0	0	0	0	0	0	3	0	0	3	0	0	0	0	0	1	0	0	0	1	4
08:45 AM	0	0	0	0	0	0	1	0	0	1	0	0	0	0	0	0	0	0	0	0	1
Total	0	0	0	0	0	0	9	3	0	12	2	0	1	0	3	1	1	0	0	2	17
09:00 AM	0	0	0	0	0	0	1	0	0	1	0	0	0	0	0	0	1	0	0	1	2
09:15 AM	0	0	0	0	0	0	0	0	0	0	1	0	0	0	1	0	0	0	0	0	1
09:30 AM	0	0	0	0	0	0	0	0	0	0	0	0	0	0	0	0	0	0	0	0	0
09:45 AM	0	0	0	0	0	0	3	1	0	4	2	0	0	0	2	0	0	0	0	0	6
Total	0	0	0	0	0	0	4	1	0	5	3	0	0	0	3	0	1	0	0	1	9
10:00 AM	0	0	0	0	0	0	0	0	0	0	0	0	0	0	0	0	1	0	0	1	1
10:15 AM	0	0	0	0	0	0	0	0	0	0	0	0	0	0	0	0	1	0	0	1	1
10:30 AM	0	0	0	0	0	0	1	0	0	1	0	0	1	0	1	0	0	0	0	0	2
10:45 AM	0	0	0	0	0	0	2	0	0	2	0	0	0	0	0	0	2	0	0	2	4
Total	0	0	0	0	0	0	3	0	0	3	0	0	1	0	1	0	4	0	0	4	8
11:00 AM	0	0	0	0	0	0	0	1	0	1	0	0	0	0	0	0	1	0	0	1	2
11:15 AM	0	0	0	0	0	0	0	0	0	0	2	0	0	0	2	0	0	0	0	0	2
11:30 AM	0	0	0	0	0	0	0	0	0	0	0	0	0	0	0	0	0	0	0	0	0
11:45 AM	0	0	0	0	0	0	1	0	0	1	0	0	0	0	0	0	0	0	0	0	1
Total	0	0	0	0	0	0	1	1	0	2	2	0	0	0	2	0	1	0	0	1	5
12:00 PM	0	0	0	0	0	0	0	0	0	0	0	0	0	0	0	0	0	0	0	0	0
12:15 PM	0	0	0	0	0	0	0	0	0	0	0	0	0	0	0	0	1	0	0	1	1
12:30 PM	0	0	0	0	0	0	0	0	0	0	0	0	0	0	0	0	1	0	0	1	1
12:45 PM	0	0	0	0	0	0	0	0	0	0	0	0	0	0	0	0	0	0	0	0	0
Total	0	0	0	0	0	0	0	0	0	0	0	0	0	0	0	0	2	0	0	2	2
01:00 PM	0	0	0	0	0	0	0	0	0	0	1	0	0	0	1	0	0	0	0	0	1
01:15 PM	0	0	0	0	0	0	0	0	0	0	0	0	0	0	0	0	1	0	0	1	1
01:30 PM	0	0	0	0	0	0	1	0	0	1	1	0	0	0	1	1	0	0	0	1	3
01:45 PM	0	0	0	0	0	0	1	0	0	1	2	0	0	0	2	0	0	0	0	0	3
Total	0	0	0	0	0	0	2	0	0	2	4	0	0	0	4	1	1	0	0	2	8
02:00 PM	0	0	0	0	0	0	0	0	0	0	0	0	0	0	0	0	0	0	0	0	0
02:15 PM	0	0	0	0	0	0	0	0	0	0	0	0	0	0	0	0	0	0	0	0	0
02:30 PM	0	0	0	0	0	0	2	0	0	2	0	0	0	0	0	0	0	0	0	0	2
02:45 PM	0	0	0	0	0	0	0	0	0	0	0	0	0	0	0	0	0	0	0	0	0
Total	0	0	0	0	0	0	2	0	0	2	0	0	0	0	0	0	0	0	0	0	2
03:00 PM	0	0	0	0	0	0	1	1	0	2	0	0	0	0	0	0	1	0	0	1	3
03:15 PM	0	0	0	0	0	0	1	1	0	2	0	0	0	0	0	0	0	0	0	0	2
03:30 PM	0	0	0	0	0	0	1	1	0	2	1	0	0	0	1	0	2	0	0	2	5
03:45 PM	0	0	0	0	0	0	0	5	0	5	0	0	0	0	0	0	0	0	0	0	5
Total	0	0	0	0	0	0	3	8	0	11	1	0	0	0	1	0	3	0	0	3	15
04:00 PM	0	0	0	0	0	0	1	0	0	1	0	0	0	0	0	0	1	0	0	1	2
04:15 PM	0	0	0	0	0	0	0	0	0	0	1	0	0	0	1	0	0	0	0	0	1

Traffic Data Service

San Jose, CA
(408) 622-4787
tdsbay@cs.com

File Name : 2 FINAL
Site Code : 00000002
Start Date : 3/12/2019
Page No : 2

Groups Printed- Bikes

	Southbound					CUESTA DR Westbound					CAMPBELL AVE Northbound					CUESTA DR Eastbound					
Start Time	Right	Thru	Left	Peds	App. Total	Right	Thru	Left	Peds	App. Total	Right	Thru	Left	Peds	App. Total	Right	Thru	Left	Peds	App. Total	Int. Total
04:30 PM	0	0	0	0	0	0	3	0	0	3	0	0	0	0	0	0	0	0	0	0	3
04:45 PM	0	0	0	0	0	0	0	0	0	0	0	0	0	0	0	0	1	0	0	1	1
Total	0	0	0	0	0	0	4	0	0	4	1	0	0	0	1	0	2	0	0	2	7
05:00 PM	0	0	0	0	0	0	1	1	0	2	0	0	0	0	0	0	4	0	0	4	6
05:15 PM	0	0	0	0	0	0	1	0	0	1	0	0	0	0	0	0	0	0	0	0	1
05:30 PM	0	0	0	0	0	0	1	0	0	1	0	0	0	0	0	0	3	0	0	3	4
05:45 PM	0	0	0	0	0	0	3	0	0	3	0	0	0	0	0	0	2	0	0	2	5
Total	0	0	0	0	0	0	6	1	0	7	0	0	0	0	0	0	9	0	0	9	16
06:00 PM	0	0	0	0	0	0	0	0	0	0	0	0	0	0	0	1	1	0	0	2	2
06:15 PM	0	0	0	0	0	0	0	0	0	0	0	0	2	0	2	0	0	0	0	0	2
06:30 PM	0	0	0	0	0	0	0	0	0	0	0	0	0	0	0	0	1	0	0	1	1
06:45 PM	0	0	0	0	0	0	0	1	0	1	0	0	0	0	0	0	1	0	0	1	2
Total	0	0	0	0	0	0	0	1	0	1	0	0	2	0	2	1	3	0	0	4	7
Grand Total	0	0	0	0	0	0	37	16	0	53	23	0	4	0	27	3	30	0	0	33	113
Apprch %	0	0	0	0		0	69.8	30.2	0		85.2	0	14.8	0		9.1	90.9	0	0		
Total %	0	0	0	0	0	0	32.7	14.2	0	46.9	20.4	0	3.5	0	23.9	2.7	26.5	0	0	29.2	

	Southbound				CUESTA DR Westbound				CAMPBELL AVE Northbound				CUESTA DR Eastbound				
Start Time	Right	Thru	Left	App. Total	Right	Thru	Left	App. Total	Right	Thru	Left	App. Total	Right	Thru	Left	App. Total	Int. Total
Peak Hour Analysis From 07:00 AM to 10:45 AM - Peak 1 of 1																	
Peak Hour for Entire Intersection Begins at 07:15 AM																	
07:15 AM	0	0	0	0	0	2	0	2	1	0	0	1	0	0	0	0	3
07:30 AM	0	0	0	0	0	1	1	2	4	0	0	4	0	0	0	0	6
07:45 AM	0	0	0	0	0	0	0	0	**5**	0	0	**5**	0	**3**	0	**3**	8
08:00 AM	0	0	0	0	0	**3**	**3**	**6**	2	0	**1**	3	0	1	0	1	**10**
Total Volume	0	0	0	0	0	6	4	10	12	0	1	13	0	4	0	4	27
% App. Total	0	0	0		0	60	40		92.3	0	7.7		0	100	0		
PHF	.000	.000	.000	.000	.000	.500	.333	.417	.600	.000	.250	.650	.000	.333	.000	.333	.675

Traffic Data Service

San Jose, CA
(408) 622-4787
tdsbay@cs.com

File Name : 2 FINAL
Site Code : 00000002
Start Date : 3/12/2019
Page No : 3

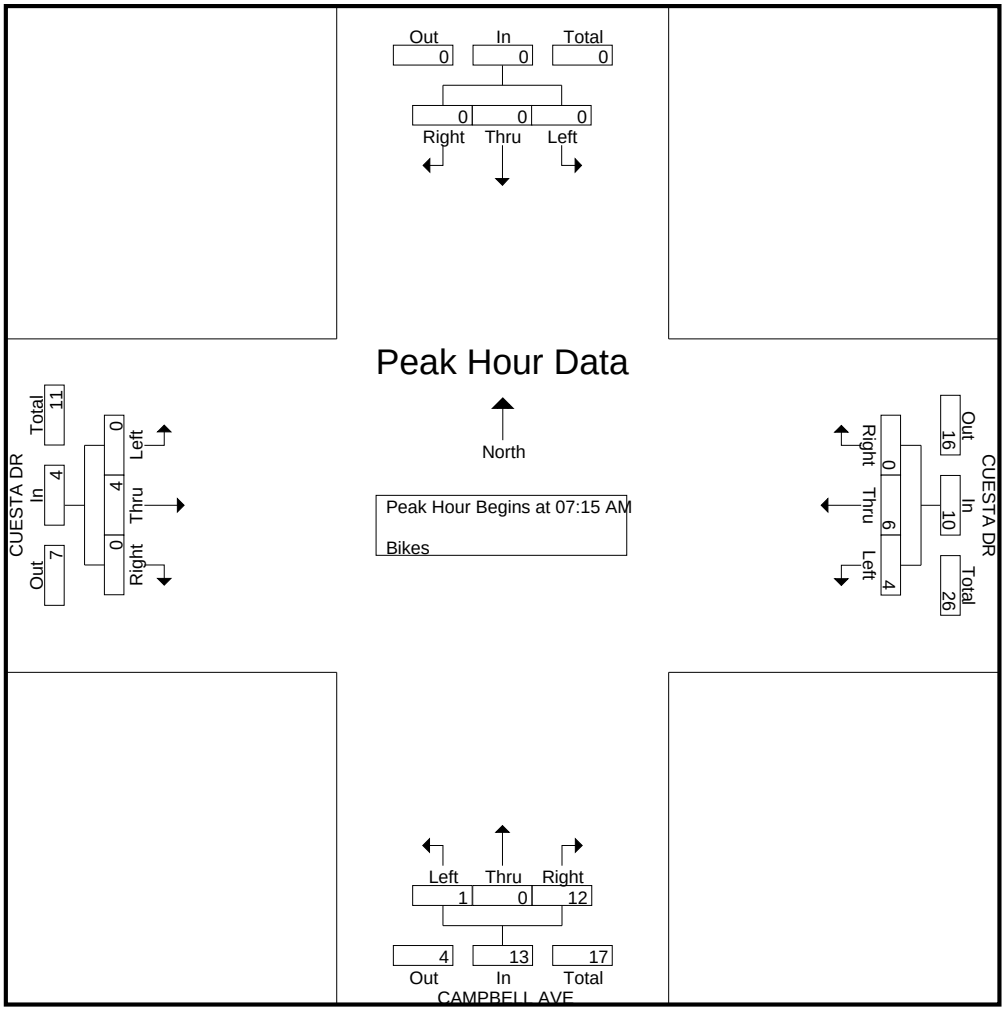

Peak Hour Analysis From 11:00 AM to 02:45 PM - Peak 1 of 1
Peak Hour for Entire Intersection Begins at 01:00 PM

01:00 PM	0	0	0	0	0	0	0	0	1	0	0	1	0	0	0	0	1
01:15 PM	0	0	0	0	0	0	0	0	0	0	0	0	0	**1**	0	**1**	1
01:30 PM	0	0	0	0	0	**1**	0	**1**	1	0	0	1	**1**	0	0	1	**3**
01:45 PM	0	0	0	0	0	1	0	1	**2**	0	0	**2**	0	0	0	0	3
Total Volume	0	0	0	0	0	2	0	2	4	0	0	4	1	1	0	2	8
% App. Total	0	0	0		0	100	0		100	0	0		50	50	0		
PHF	.000	.000	.000	.000	.000	.500	.000	.500	.500	.000	.000	.500	.250	.250	.000	.500	.667

Traffic Data Service

San Jose, CA
(408) 622-4787
tdsbay@cs.com

File Name : 2 FINAL
Site Code : 00000002
Start Date : 3/12/2019
Page No : 4

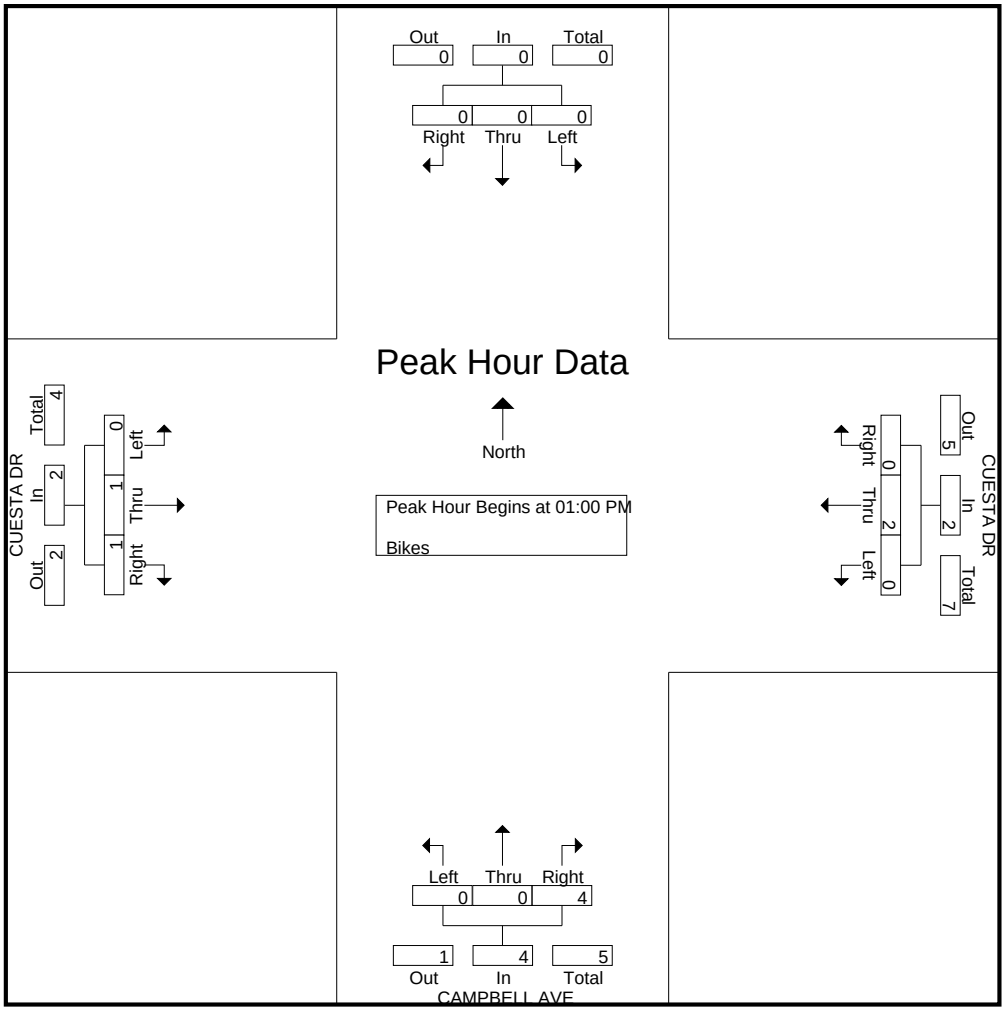

Peak Hour Analysis From 03:00 PM to 06:45 PM - Peak 1 of 1
Peak Hour for Entire Intersection Begins at 05:00 PM

05:00 PM	0	0	0	0	0	1	**1**	2	0	0	0	0	0	**4**	0	**4**	**6**
05:15 PM	0	0	0	0	0	1	0	1	0	0	0	0	0	0	0	0	1
05:30 PM	0	0	0	0	0	1	0	1	0	0	0	0	0	3	0	3	4
05:45 PM	0	0	0	0	0	**3**	0	**3**	0	0	0	0	0	2	0	2	5
Total Volume	0	0	0	0	0	6	1	7	0	0	0	0	0	9	0	9	16
% App. Total	0	0	0		0	85.7	14.3		0	0	0		0	100	0		
PHF	.000	.000	.000	.000	.000	.500	.250	.583	.000	.000	.000	.000	.000	.563	.000	.563	.667

Traffic Data Service

San Jose, CA
(408) 622-4787
tdsbay@cs.com

File Name : 2 FINAL
Site Code : 00000002
Start Date : 3/12/2019
Page No : 5

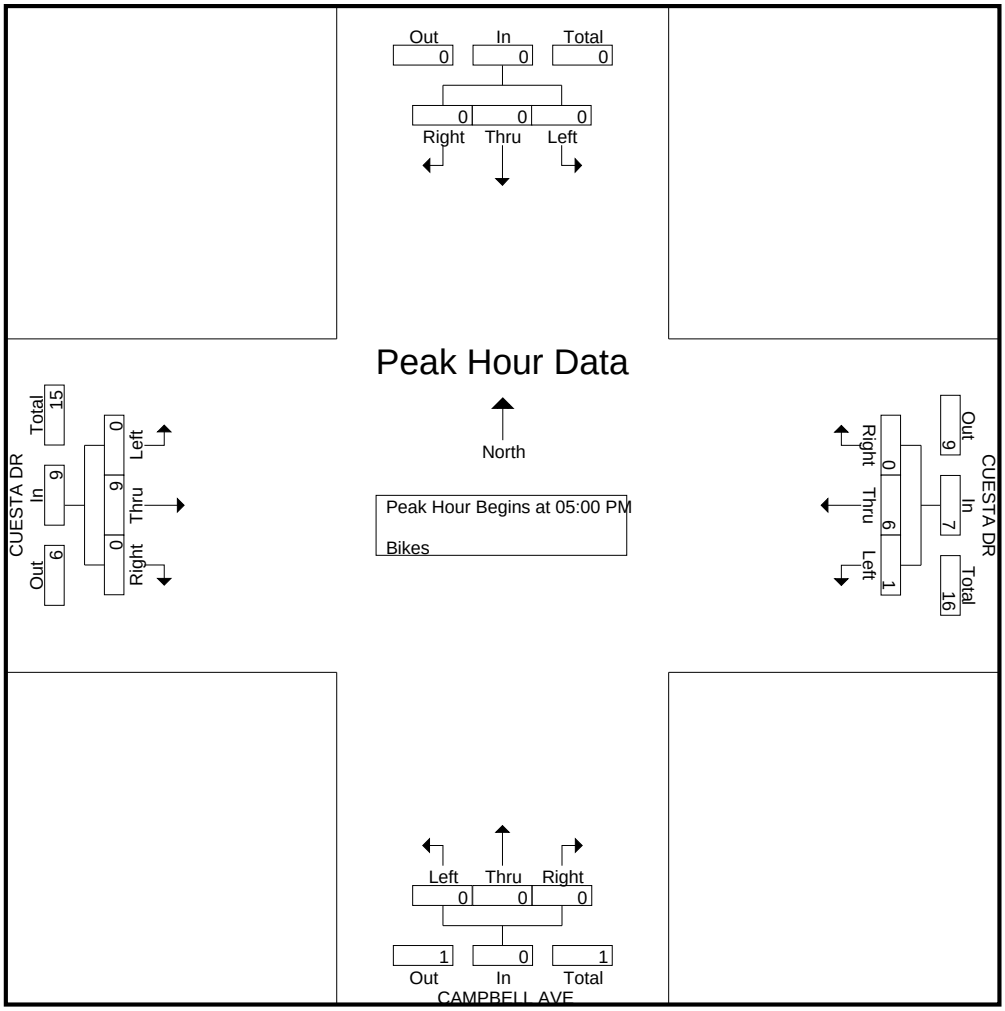

Peak Hour Analysis From 07:00 AM to 06:45 PM - Peak 1 of 1
Peak Hour for Entire Intersection Begins at 07:15 AM

07:15 AM	0	0	0	0	0	2	0	2	1	0	0	1	0	0	0	0	3
07:30 AM	0	0	0	0	0	1	1	2	4	0	0	4	0	0	0	0	6
07:45 AM	0	0	0	0	0	0	0	0	**5**	0	0	**5**	0	**3**	0	**3**	8
08:00 AM	0	0	0	0	0	**3**	**3**	**6**	2	0	**1**	3	0	1	0	1	**10**
Total Volume	0	0	0	0	0	6	4	10	12	0	1	13	0	4	0	4	27
% App. Total	0	0	0		0	60	40		92.3	0	7.7		0	100	0		
PHF	.000	.000	.000	.000	.000	.500	.333	.417	.600	.000	.250	.650	.000	.333	.000	.333	.675

Traffic Data Service

San Jose, CA
(408) 622-4787
tdsbay@cs.com

File Name : 2 FINAL
Site Code : 00000002
Start Date : 3/12/2019
Page No : 6

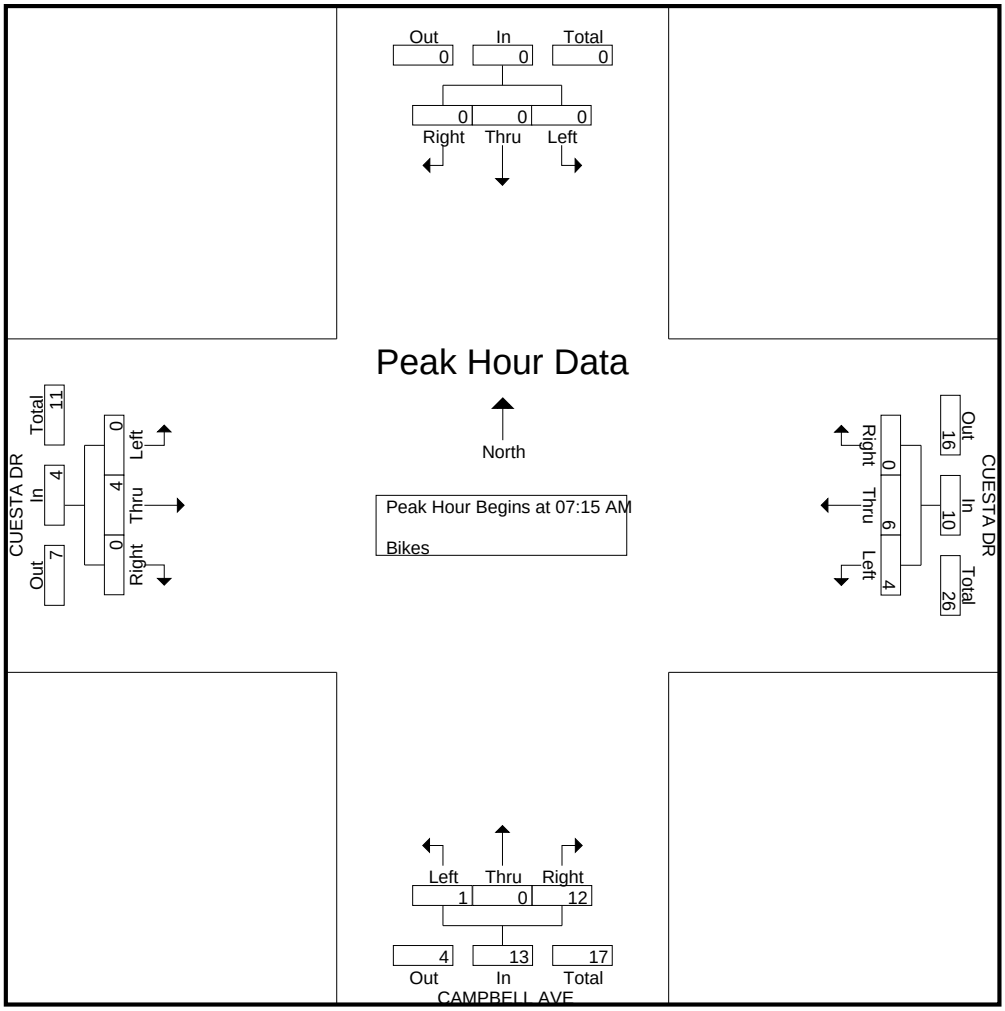

Traffic Data Service

San Jose, CA
(408) 622-4787
tdsbay@cs.com

File Name : 3 FINAL
Site Code : 00000003
Start Date : 3/12/2019
Page No : 1

Groups Printed- Vehicles

	S CLARK AVE Southbound					CUESTA DR Westbound					Northbound					CUESTA DR Eastbound					
Start Time	Right	Thru	Left	Peds	App. Total	Right	Thru	Left	Peds	App. Total	Right	Thru	Left	Peds	App. Total	Right	Thru	Left	Peds	App. Total	Int. Total
07:00 AM	2	0	5	0	7	5	49	1	0	55	0	0	0	0	0	0	34	0	0	34	96
07:15 AM	1	0	7	0	8	4	75	0	0	79	0	0	0	0	0	0	54	2	0	56	143
07:30 AM	4	0	1	0	5	4	91	0	0	95	0	0	0	0	0	0	60	4	0	64	164
07:45 AM	9	0	4	1	14	8	87	0	0	95	0	0	0	0	0	0	89	22	0	111	220
Total	16	0	17	1	34	21	302	1	0	324	0	0	0	0	0	0	237	28	0	265	623
08:00 AM	32	0	9	1	42	2	101	0	0	103	0	0	0	0	0	0	90	12	0	102	247
08:15 AM	43	0	3	2	48	8	95	0	0	103	0	0	0	0	0	0	93	8	0	101	252
08:30 AM	11	0	7	2	20	6	88	0	0	94	0	0	0	0	0	0	113	20	0	133	247
08:45 AM	4	0	7	2	13	6	108	0	0	114	0	0	0	0	0	0	72	7	0	79	206
Total	90	0	26	7	123	22	392	0	0	414	0	0	0	0	0	0	368	47	0	415	952
09:00 AM	4	0	11	2	17	4	103	0	0	107	0	0	0	0	0	0	71	5	0	76	200
09:15 AM	2	0	8	2	12	5	82	0	0	87	0	0	0	0	0	0	100	4	0	104	203
09:30 AM	3	0	7	0	10	4	94	0	0	98	0	0	0	0	0	0	77	0	0	77	185
09:45 AM	4	0	6	0	10	7	108	0	0	115	0	0	0	0	0	0	98	2	0	100	225
Total	13	0	32	4	49	20	387	0	0	407	0	0	0	0	0	0	346	11	0	357	813
10:00 AM	4	0	5	0	9	6	115	0	0	121	0	0	0	0	0	0	78	5	0	83	213
10:15 AM	5	0	7	0	12	8	102	0	0	110	0	0	0	0	0	0	57	2	0	59	181
10:30 AM	4	0	4	0	8	6	104	0	0	110	0	0	0	0	0	0	50	1	0	51	169
10:45 AM	3	0	4	1	8	6	64	0	0	70	0	0	0	0	0	0	57	3	0	60	138
Total	16	0	20	1	37	26	385	0	0	411	0	0	0	0	0	0	242	11	0	253	701
11:00 AM	4	0	3	0	7	12	61	0	0	73	0	0	0	0	0	0	46	5	0	51	131
11:15 AM	2	0	5	0	7	4	52	0	0	56	0	0	0	0	0	0	52	11	0	63	126
11:30 AM	2	0	9	0	11	7	68	0	0	75	0	0	0	0	0	0	47	3	0	50	136
11:45 AM	3	0	14	2	19	9	64	0	1	74	0	0	0	0	0	0	50	2	0	52	145
Total	11	0	31	2	44	32	245	0	1	278	0	0	0	0	0	0	195	21	0	216	538
12:00 PM	2	0	6	0	8	12	51	0	0	63	0	0	0	0	0	0	57	2	0	59	130
12:15 PM	3	0	5	0	8	8	71	0	1	80	0	0	0	0	0	0	37	5	0	42	130
12:30 PM	5	0	4	0	9	7	48	0	0	55	0	0	0	0	0	0	50	5	0	55	119
12:45 PM	4	0	4	0	8	7	44	0	0	51	0	0	0	0	0	0	57	2	0	59	118
Total	14	0	19	0	33	34	214	0	1	249	0	0	0	0	0	0	201	14	0	215	497
01:00 PM	1	0	7	0	8	6	59	0	0	65	0	0	0	0	0	0	52	0	0	52	125
01:15 PM	4	0	7	1	12	5	44	0	0	49	0	0	0	0	0	0	48	1	0	49	110
01:30 PM	1	0	4	0	5	6	53	0	0	59	0	0	0	0	0	0	55	3	0	58	122
01:45 PM	4	0	7	0	11	9	47	0	0	56	0	0	0	0	0	0	48	3	0	51	118
Total	10	0	25	1	36	26	203	0	0	229	0	0	0	0	0	0	203	7	0	210	475
02:00 PM	2	0	8	0	10	13	58	0	0	71	0	0	0	0	0	0	50	4	0	54	135
02:15 PM	7	0	6	0	13	6	55	0	0	61	0	0	0	0	0	0	59	3	0	62	136
02:30 PM	10	0	5	2	17	10	53	0	0	63	0	0	0	0	0	0	58	4	0	62	142
02:45 PM	25	0	11	0	36	3	55	0	1	59	0	0	0	0	0	0	60	2	0	62	157
Total	44	0	30	2	76	32	221	0	1	254	0	0	0	0	0	0	227	13	0	240	570
03:00 PM	9	0	10	1	20	8	63	0	0	71	0	0	0	0	0	0	68	20	0	88	179
03:15 PM	6	0	4	0	10	11	53	0	0	64	0	0	0	0	0	0	89	5	1	95	169
03:30 PM	7	0	9	1	17	12	51	0	1	64	0	0	0	0	0	0	86	12	0	98	179
03:45 PM	8	0	8	3	19	11	46	0	0	57	0	0	0	0	0	0	81	2	0	83	159
Total	30	0	31	5	66	42	213	0	1	256	0	0	0	0	0	0	324	39	1	364	686
04:00 PM	4	0	14	0	18	5	65	0	0	70	0	0	0	0	0	0	79	3	0	82	170
04:15 PM	8	0	4	2	14	11	55	0	0	66	0	0	0	0	0	0	125	7	0	132	212

Traffic Data Service

San Jose, CA
(408) 622-4787
tdsbay@cs.com

File Name : 3 FINAL
Site Code : 00000003
Start Date : 3/12/2019
Page No : 2

Groups Printed- Vehicles

	S CLARK AVE Southbound					CUESTA DR Westbound					Northbound					CUESTA DR Eastbound					
Start Time	Right	Thru	Left	Peds	App. Total	Right	Thru	Left	Peds	App. Total	Right	Thru	Left	Peds	App. Total	Right	Thru	Left	Peds	App. Total	Int. Total
04:30 PM	3	0	9	0	12	15	56	0	0	71	0	0	0	0	0	0	103	6	0	109	192
04:45 PM	9	0	9	1	19	6	74	0	1	81	0	0	0	0	0	0	110	10	0	120	220
Total	24	0	36	3	63	37	250	0	1	288	0	0	0	0	0	0	417	26	0	443	794
05:00 PM	7	0	6	0	13	13	70	0	0	83	0	0	0	0	0	0	107	13	0	120	216
05:15 PM	9	0	7	2	18	12	74	0	0	86	0	0	0	0	0	0	68	3	0	71	175
05:30 PM	13	0	16	1	30	8	66	0	0	74	0	0	0	0	0	0	94	5	0	99	203
05:45 PM	10	0	5	0	15	6	66	0	0	72	0	0	0	0	0	0	92	13	0	105	192
Total	39	0	34	3	76	39	276	0	0	315	0	0	0	0	0	0	361	34	0	395	786
06:00 PM	8	0	7	0	15	9	59	0	0	68	0	0	0	0	0	0	115	9	0	124	207
06:15 PM	11	0	1	0	12	12	68	0	0	80	0	0	0	0	0	0	102	8	0	110	202
06:30 PM	11	0	4	0	15	8	84	0	0	92	0	0	0	0	0	0	74	7	0	81	188
06:45 PM	10	0	1	0	11	4	67	0	0	71	0	0	0	0	0	0	81	6	0	87	169
Total	40	0	13	0	53	33	278	0	0	311	0	0	0	0	0	0	372	30	0	402	766
Grand Total	347	0	314	29	690	364	3366	1	5	3736	0	0	0	0	0	0	3493	281	1	3775	8201
Apprch %	50.3	0	45.5	4.2		9.7	90.1	0	0.1		0	0	0	0		0	92.5	7.4	0		
Total %	4.2	0	3.8	0.4	8.4	4.4	41	0	0.1	45.6	0	0	0	0	0	0	42.6	3.4	0	46	

	S CLARK AVE Southbound				CUESTA DR Westbound				Northbound				CUESTA DR Eastbound				
Start Time	Right	Thru	Left	App. Total	Right	Thru	Left	App. Total	Right	Thru	Left	App. Total	Right	Thru	Left	App. Total	Int. Total
Peak Hour Analysis From 07:00 AM to 10:45 AM - Peak 1 of 1																	
Peak Hour for Entire Intersection Begins at 07:45 AM																	
07:45 AM	9	0	4	13	**8**	87	0	95	0	0	0	0	0	89	**22**	111	219
08:00 AM	32	0	**9**	41	2	**101**	0	**103**	0	0	0	0	0	90	12	102	246
08:15 AM	**43**	0	3	**46**	8	95	0	103	0	0	0	0	0	93	8	101	**250**
08:30 AM	11	0	7	18	6	88	0	94	0	0	0	0	0	**113**	20	**133**	245
Total Volume	95	0	23	118	24	371	0	395	0	0	0	0	0	385	62	447	960
% App. Total	80.5	0	19.5		6.1	93.9	0		0	0	0		0	86.1	13.9		
PHF	.552	.000	.639	.641	.750	.918	.000	.959	.000	.000	.000	.000	.000	.852	.705	.840	.960

Traffic Data Service

San Jose, CA
(408) 622-4787
tdsbay@cs.com

File Name : 3 FINAL
Site Code : 00000003
Start Date : 3/12/2019
Page No : 3

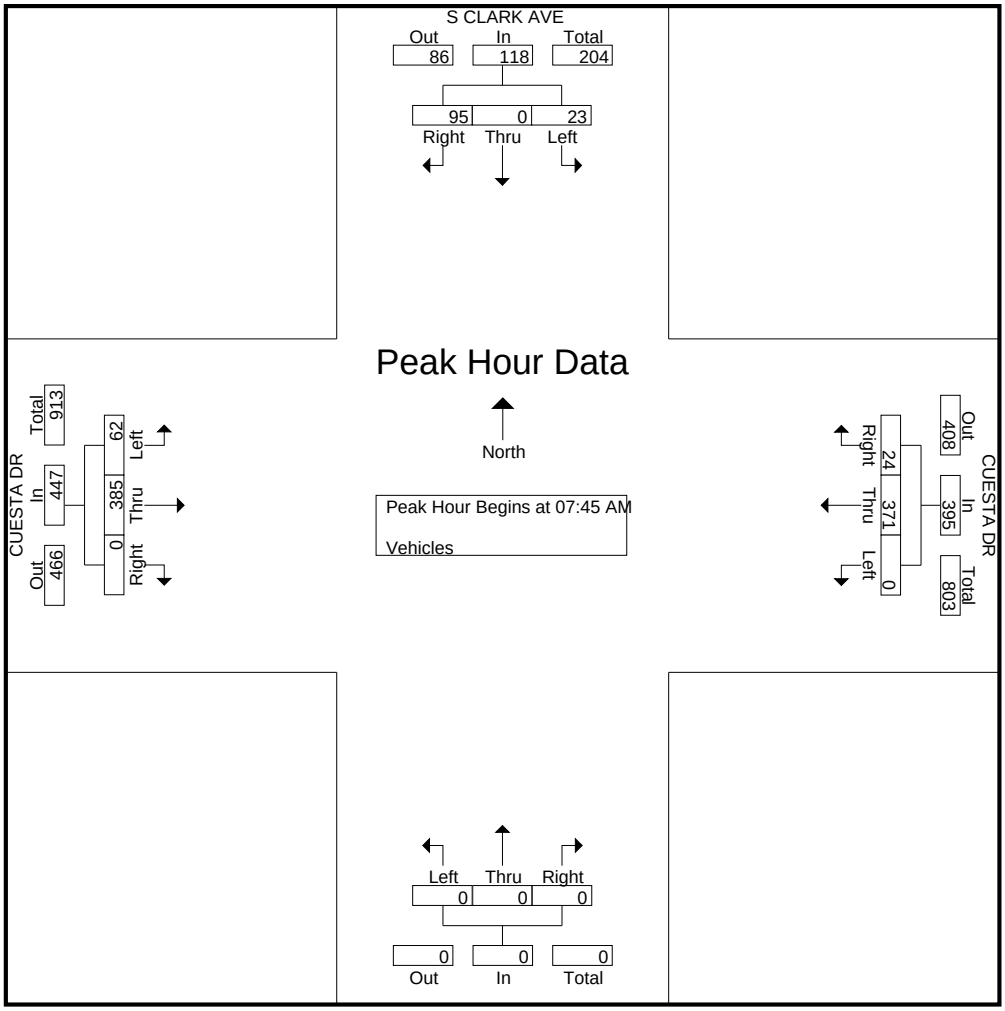

Peak Hour Analysis From 11:00 AM to 02:45 PM - Peak 1 of 1
Peak Hour for Entire Intersection Begins at 02:00 PM

02:00 PM	2	0	8	10	**13**	**58**	0	**71**	0	0	0	0	0	50	**4**	54	135
02:15 PM	7	0	6	13	6	55	0	61	0	0	0	0	0	59	3	**62**	136
02:30 PM	10	0	5	15	10	53	0	63	0	0	0	0	0	58	4	62	140
02:45 PM	**25**	0	**11**	**36**	3	55	0	58	0	0	0	0	0	**60**	2	62	**156**
Total Volume	44	0	30	74	32	221	0	253	0	0	0	0	0	227	13	240	567
% App. Total	59.5	0	40.5		12.6	87.4	0		0	0	0		0	94.6	5.4		
PHF	.440	.000	.682	.514	.615	.953	.000	.891	.000	.000	.000	.000	.000	.946	.813	.968	.909

Traffic Data Service

San Jose, CA
(408) 622-4787
tdsbay@cs.com

File Name : 3 FINAL
Site Code : 00000003
Start Date : 3/12/2019
Page No : 4

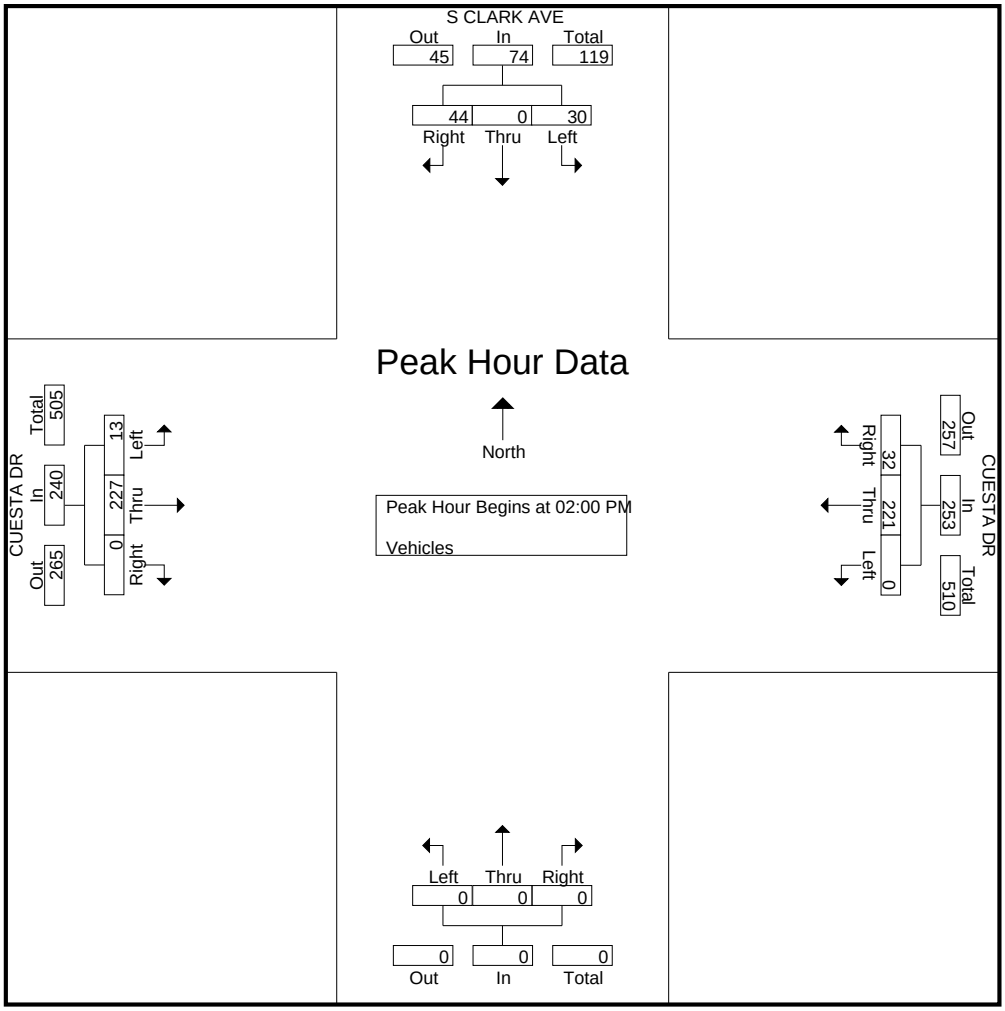

Peak Hour Analysis From 03:00 PM to 06:45 PM - Peak 1 of 1
Peak Hour for Entire Intersection Begins at 04:15 PM

04:15 PM	8	0	4	12	11	55	0	66	0	0	0	0	0	**125**	7	**132**	210
04:30 PM	3	0	**9**	12	**15**	56	0	71	0	0	0	0	0	103	6	109	192
04:45 PM	**9**	0	9	**18**	6	**74**	0	80	0	0	0	0	0	110	10	120	**218**
05:00 PM	7	0	6	13	13	70	0	**83**	0	0	0	0	0	107	**13**	120	216
Total Volume	27	0	28	55	45	255	0	300	0	0	0	0	0	445	36	481	836
% App. Total	49.1	0	50.9		15	85	0		0	0	0		0	92.5	7.5		
PHF	.750	.000	.778	.764	.750	.861	.000	.904	.000	.000	.000	.000	.000	.890	.692	.911	.959

Traffic Data Service

San Jose, CA
(408) 622-4787
tdsbay@cs.com

File Name : 3 FINAL
Site Code : 00000003
Start Date : 3/12/2019
Page No : 5

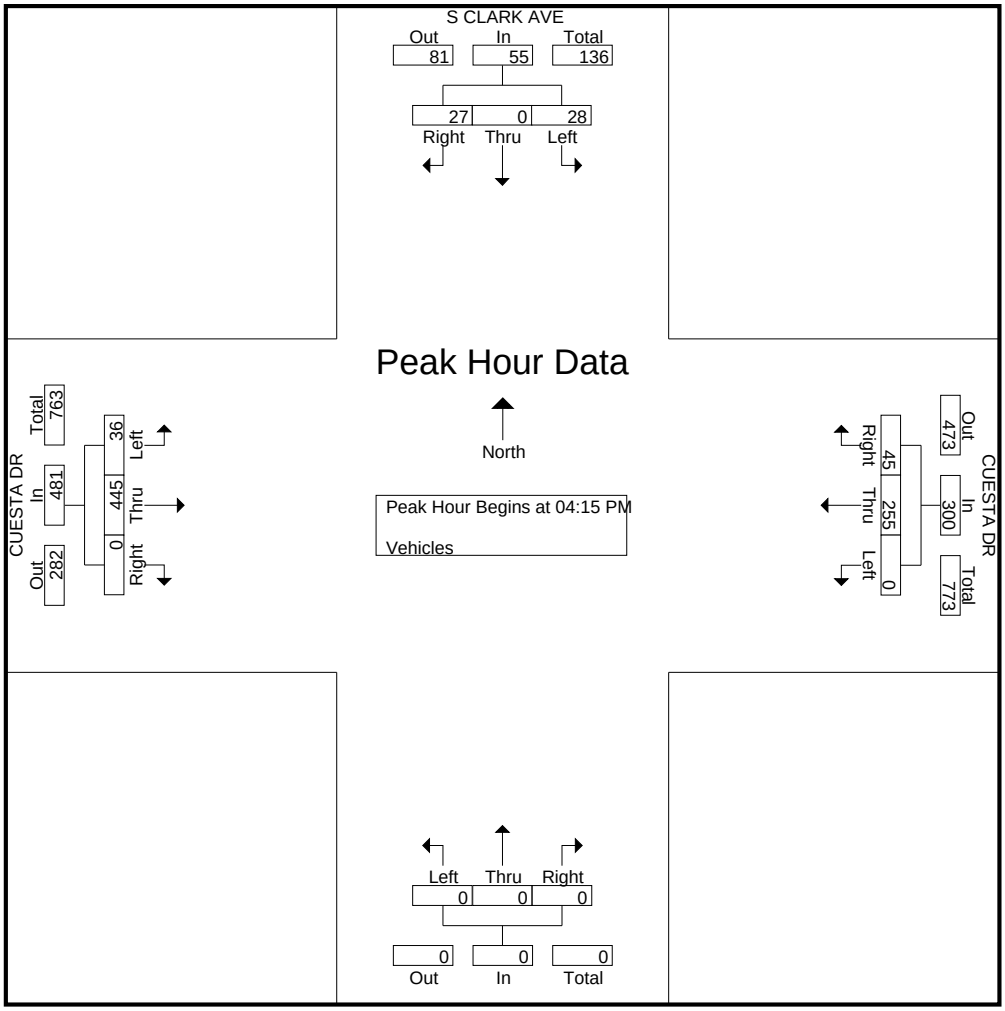

Peak Hour Analysis From 07:00 AM to 06:45 PM - Peak 1 of 1
Peak Hour for Entire Intersection Begins at 07:45 AM

07:45 AM	9	0	4	13	**8**	87	0	95	0	0	0	0	0	89	**22**	111	219
08:00 AM	32	0	**9**	41	2	**101**	0	**103**	0	0	0	0	0	90	12	102	246
08:15 AM	**43**	0	3	**46**	8	95	0	103	0	0	0	0	0	93	8	101	**250**
08:30 AM	11	0	7	18	6	88	0	94	0	0	0	0	0	**113**	20	**133**	245
Total Volume	95	0	23	118	24	371	0	395	0	0	0	0	0	385	62	447	960
% App. Total	80.5	0	19.5		6.1	93.9	0		0	0	0		0	86.1	13.9		
PHF	.552	.000	.639	.641	.750	.918	.000	.959	.000	.000	.000	.000	.000	.852	.705	.840	.960

Traffic Data Service

San Jose, CA
(408) 622-4787
tdsbay@cs.com

File Name : 3 FINAL
Site Code : 00000003
Start Date : 3/12/2019
Page No : 6

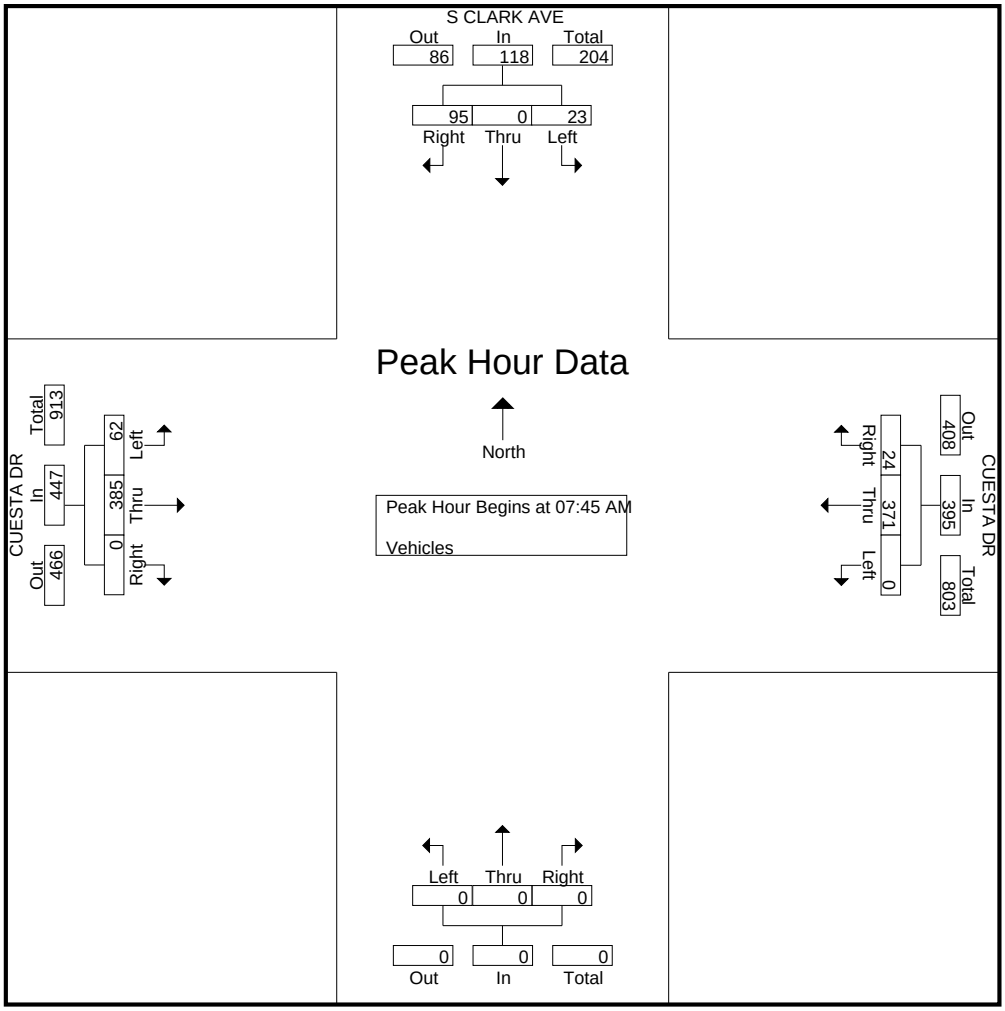

Traffic Data Service

San Jose, CA
(408) 622-4787
tdsbay@cs.com

File Name : 3 FINAL
Site Code : 00000003
Start Date : 3/12/2019
Page No : 1

Groups Printed- Bikes

	S CLARK AVE Southbound					CUESTA DR Westbound					Northbound					CUESTA DR Eastbound					
Start Time	Right	Thru	Left	Peds	App. Total	Right	Thru	Left	Peds	App. Total	Right	Thru	Left	Peds	App. Total	Right	Thru	Left	Peds	App. Total	Int. Total
07:00 AM	0	0	0	0	0	0	0	0	0	0	0	0	0	0	0	0	0	0	0	0	0
07:15 AM	0	0	0	0	0	0	2	0	0	2	0	0	0	0	0	0	1	0	0	1	3
07:30 AM	0	0	0	0	0	0	1	0	0	1	0	0	0	0	0	0	0	4	0	4	5
07:45 AM	0	0	0	0	0	1	0	0	0	1	0	0	0	0	0	0	2	4	0	6	7
Total	0	0	0	0	0	1	3	0	0	4	0	0	0	0	0	0	3	8	0	11	15
08:00 AM	3	0	0	0	3	0	3	0	0	3	0	0	0	0	0	0	0	2	0	2	8
08:15 AM	1	0	0	0	1	0	2	0	0	2	0	0	0	0	0	0	0	0	0	0	3
08:30 AM	0	0	0	0	0	0	3	0	0	3	0	0	0	0	0	0	0	0	0	0	3
08:45 AM	0	0	0	0	0	0	1	0	0	1	0	0	0	0	0	0	0	1	0	1	2
Total	4	0	0	0	4	0	9	0	0	9	0	0	0	0	0	0	0	3	0	3	16
09:00 AM	0	0	0	0	0	0	1	0	0	1	0	0	0	0	0	0	1	0	0	1	2
09:15 AM	0	0	0	0	0	0	0	0	0	0	0	0	0	0	0	0	0	1	0	1	1
09:30 AM	0	0	0	0	0	0	1	0	0	1	0	0	0	0	0	0	0	0	0	0	1
09:45 AM	1	0	0	0	1	0	2	0	0	2	0	0	0	0	0	0	0	2	0	2	5
Total	1	0	0	0	1	0	4	0	0	4	0	0	0	0	0	0	1	3	0	4	9
10:00 AM	0	0	0	0	0	0	0	0	0	0	0	0	0	0	0	0	1	0	0	1	1
10:15 AM	0	0	0	0	0	0	0	0	0	0	0	0	0	0	0	0	1	0	0	1	1
10:30 AM	0	0	0	0	0	0	1	0	0	1	0	0	0	0	0	0	0	0	0	0	1
10:45 AM	0	0	0	0	0	0	2	0	0	2	0	0	0	0	0	0	0	0	0	0	2
Total	0	0	0	0	0	0	3	0	0	3	0	0	0	0	0	0	2	0	0	2	5
11:00 AM	0	0	0	0	0	0	1	0	0	1	0	0	0	0	0	0	1	0	0	1	2
11:15 AM	0	0	0	0	0	0	0	0	0	0	0	0	0	0	0	0	0	2	0	2	2
11:30 AM	0	0	0	0	0	0	0	0	0	0	0	0	0	0	0	0	0	0	0	0	0
11:45 AM	0	0	0	0	0	0	1	0	0	1	0	0	0	0	0	0	0	0	0	0	1
Total	0	0	0	0	0	0	2	0	0	2	0	0	0	0	0	0	1	2	0	3	5
12:00 PM	0	0	0	0	0	0	0	0	0	0	0	0	0	0	0	0	0	0	0	0	0
12:15 PM	0	0	0	0	0	0	0	0	0	0	0	0	0	0	0	0	0	0	0	0	0
12:30 PM	0	0	0	0	0	0	0	0	0	0	0	0	0	0	0	0	1	0	0	1	1
12:45 PM	0	0	0	0	0	0	0	0	0	0	0	0	0	0	0	0	0	0	0	0	0
Total	0	0	0	0	0	0	0	0	0	0	0	0	0	0	0	0	1	0	0	1	1
01:00 PM	0	0	0	0	0	0	0	0	0	0	0	0	0	0	0	0	0	0	0	0	0
01:15 PM	0	0	0	0	0	0	0	0	0	0	0	0	0	0	0	0	0	0	0	0	0
01:30 PM	0	0	0	0	0	0	1	0	0	1	0	0	0	0	0	0	0	1	0	1	2
01:45 PM	0	0	0	0	0	2	1	0	0	3	0	0	0	0	0	0	0	1	0	1	4
Total	0	0	0	0	0	2	2	0	0	4	0	0	0	0	0	0	0	2	0	2	6
02:00 PM	0	0	0	0	0	0	0	0	0	0	0	0	0	0	0	0	0	0	0	0	0
02:15 PM	0	0	0	0	0	0	0	0	0	0	0	0	0	0	0	0	0	0	0	0	0
02:30 PM	1	0	0	0	1	0	2	0	0	2	0	0	0	0	0	0	1	0	0	1	4
02:45 PM	0	0	0	0	0	0	0	0	0	0	0	0	0	0	0	0	0	0	0	0	0
Total	1	0	0	0	1	0	2	0	0	2	0	0	0	0	0	0	1	0	0	1	4
03:00 PM	0	0	0	0	0	0	2	0	0	2	0	0	0	0	0	0	0	1	0	1	3
03:15 PM	2	0	1	0	3	0	0	0	0	0	0	0	0	0	0	0	0	1	0	1	4
03:30 PM	1	0	2	0	3	0	1	0	0	1	0	0	0	0	0	0	2	1	0	3	7
03:45 PM	5	0	0	0	5	0	0	0	0	0	0	0	0	0	0	0	0	0	0	0	5
Total	8	0	3	0	11	0	3	0	0	3	0	0	0	0	0	0	2	3	0	5	19
04:00 PM	0	0	0	0	0	0	1	0	0	1	0	0	0	0	0	0	1	0	0	1	2
04:15 PM	0	0	0	0	0	0	0	0	0	0	0	0	0	0	0	0	1	0	0	1	1

Traffic Data Service

San Jose, CA
(408) 622-4787
tdsbay@cs.com

File Name : 3 FINAL
Site Code : 00000003
Start Date : 3/12/2019
Page No : 2

Groups Printed- Bikes

	S CLARK AVE Southbound					CUESTA DR Westbound					Northbound					CUESTA DR Eastbound					
Start Time	Right	Thru	Left	Peds	App. Total	Right	Thru	Left	Peds	App. Total	Right	Thru	Left	Peds	App. Total	Right	Thru	Left	Peds	App. Total	Int. Total
04:30 PM	0	0	0	0	0	0	3	0	0	3	0	0	0	0	0	0	0	0	0	0	3
04:45 PM	0	0	0	0	0	1	0	0	0	1	0	0	0	0	0	0	1	0	0	1	2
Total	0	0	0	0	0	1	4	0	0	5	0	0	0	0	0	0	3	0	0	3	8
05:00 PM	0	0	0	0	0	0	2	0	0	2	0	0	0	0	0	0	3	0	0	3	5
05:15 PM	0	0	0	0	0	0	1	0	0	1	0	0	0	0	0	0	0	0	0	0	1
05:30 PM	0	0	0	0	0	0	1	0	0	1	0	0	0	0	0	0	2	0	0	2	3
05:45 PM	0	0	0	0	0	0	3	0	0	3	0	0	0	0	0	0	0	0	0	0	3
Total	0	0	0	0	0	0	7	0	0	7	0	0	0	0	0	0	5	0	0	5	12
06:00 PM	0	0	0	0	0	0	0	0	0	0	0	0	0	0	0	0	0	0	0	0	0
06:15 PM	0	0	0	0	0	0	0	0	0	0	0	0	0	0	0	0	0	0	0	0	0
06:30 PM	0	0	0	0	0	0	0	0	0	0	0	0	0	0	0	0	1	0	0	1	1
06:45 PM	0	0	0	0	0	0	0	0	0	0	0	0	0	0	0	0	0	0	0	0	0
Total	0	0	0	0	0	0	0	0	0	0	0	0	0	0	0	0	1	0	0	1	1
Grand Total	14	0	3	0	17	4	39	0	0	43	0	0	0	0	0	0	20	21	0	41	101
Apprch %	82.4	0	17.6	0		9.3	90.7	0	0		0	0	0	0		0	48.8	51.2	0		
Total %	13.9	0	3	0	16.8	4	38.6	0	0	42.6	0	0	0	0	0	0	19.8	20.8	0	40.6	

	S CLARK AVE Southbound				CUESTA DR Westbound				Northbound				CUESTA DR Eastbound				
Start Time	Right	Thru	Left	App. Total	Right	Thru	Left	App. Total	Right	Thru	Left	App. Total	Right	Thru	Left	App. Total	Int. Total
Peak Hour Analysis From 07:00 AM to 10:45 AM - Peak 1 of 1																	
Peak Hour for Entire Intersection Begins at 07:15 AM																	
07:15 AM	0	0	0	0	0	2	0	2	0	0	0	0	0	1	0	1	3
07:30 AM	0	0	0	0	0	1	0	1	0	0	0	0	0	0	**4**	4	5
07:45 AM	0	0	0	0	**1**	0	0	1	0	0	0	0	0	**2**	4	**6**	7
08:00 AM	**3**	0	0	**3**	0	**3**	0	**3**	0	0	0	0	0	0	2	2	**8**
Total Volume	3	0	0	3	1	6	0	7	0	0	0	0	0	3	10	13	23
% App. Total	100	0	0		14.3	85.7	0		0	0	0		0	23.1	76.9		
PHF	.250	.000	.000	.250	.250	.500	.000	.583	.000	.000	.000	.000	.000	.375	.625	.542	.719

Traffic Data Service

San Jose, CA
(408) 622-4787
tdsbay@cs.com

File Name : 3 FINAL
Site Code : 00000003
Start Date : 3/12/2019
Page No : 3

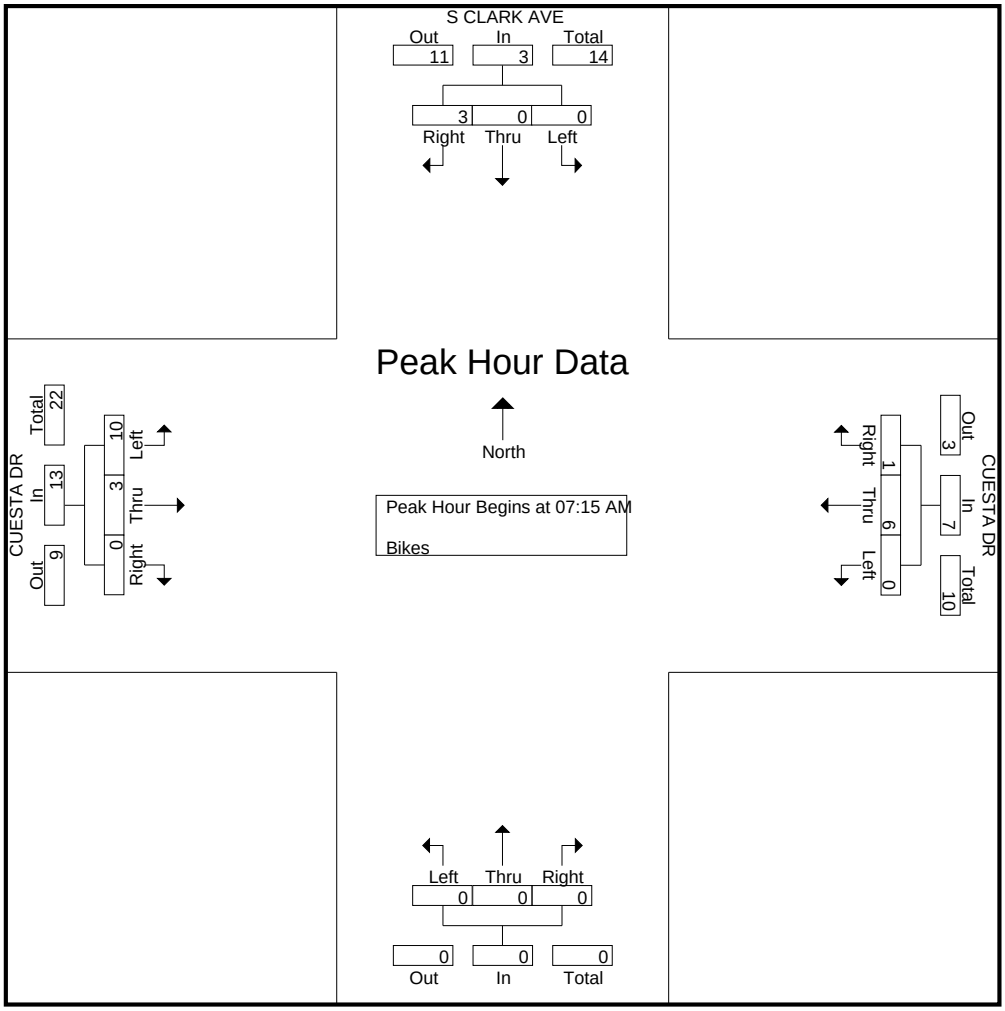

Peak Hour Analysis From 11:00 AM to 02:45 PM - Peak 1 of 1
Peak Hour for Entire Intersection Begins at 01:45 PM

01:45 PM	0	0	0	0	**2**	1	0	**3**	0	0	0	0	0	0	**1**	**1**	**4**
02:00 PM	0	0	0	0	0	0	0	0	0	0	0	0	0	0	0	0	0
02:15 PM	0	0	0	0	0	0	0	0	0	0	0	0	0	0	0	0	0
02:30 PM	**1**	0	0	**1**	0	**2**	0	2	0	0	0	0	0	**1**	0	1	4
Total Volume	1	0	0	1	2	3	0	5	0	0	0	0	0	1	1	2	8
% App. Total	100	0	0		40	60	0		0	0	0		0	50	50		
PHF	.250	.000	.000	.250	.250	.375	.000	.417	.000	.000	.000	.000	.000	.250	.250	.500	.500

Traffic Data Service

San Jose, CA
(408) 622-4787
tdsbay@cs.com

File Name : 3 FINAL
Site Code : 00000003
Start Date : 3/12/2019
Page No : 4

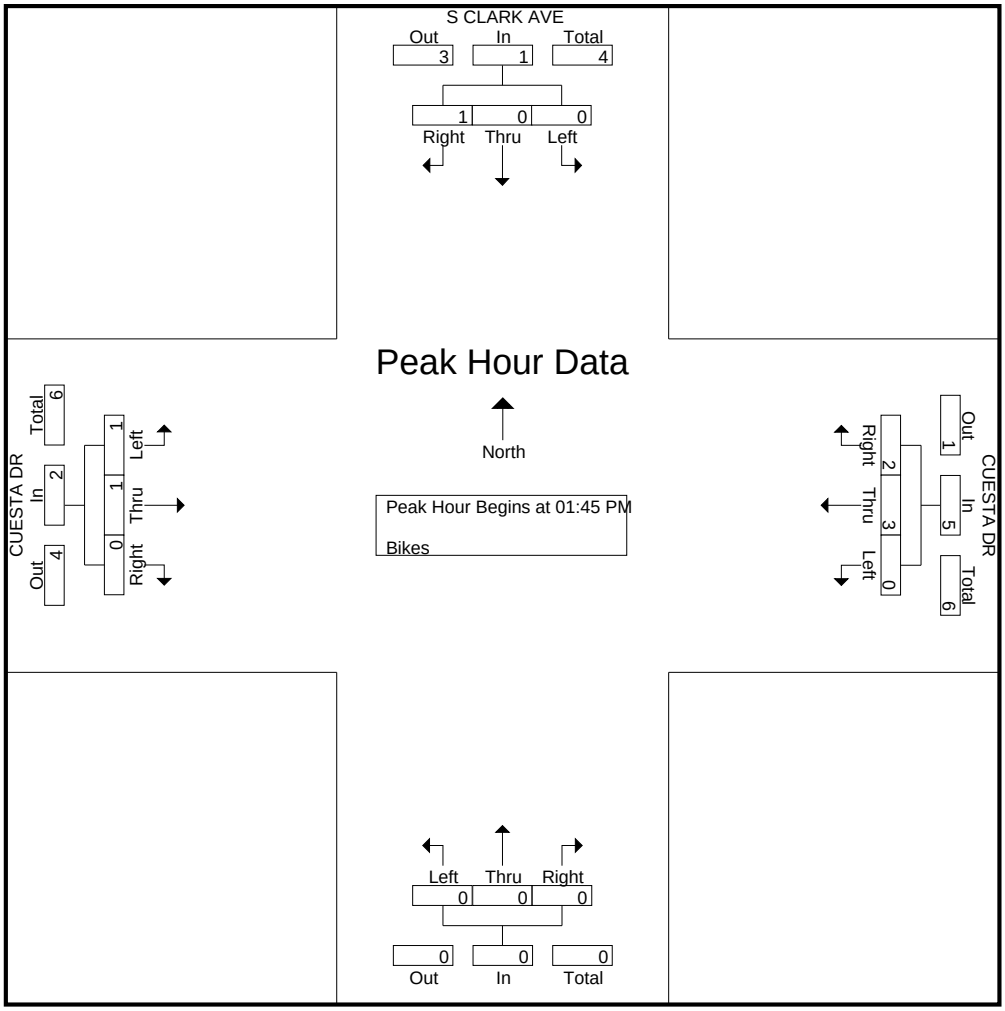

Peak Hour Analysis From 03:00 PM to 06:45 PM - Peak 1 of 1
Peak Hour for Entire Intersection Begins at 03:00 PM

03:00 PM	0	0	0	0	0	**2**	0	**2**	0	0	0	0	0	0	**1**	1	3
03:15 PM	2	0	1	3	0	0	0	0	0	0	0	0	0	0	1	1	4
03:30 PM	1	0	**2**	3	0	1	0	1	0	0	0	0	0	**2**	1	**3**	**7**
03:45 PM	**5**	0	0	**5**	0	0	0	0	0	0	0	0	0	0	0	0	5
Total Volume	8	0	3	11	0	3	0	3	0	0	0	0	0	2	3	5	19
% App. Total	72.7	0	27.3		0	100	0		0	0	0		0	40	60		
PHF	.400	.000	.375	.550	.000	.375	.000	.375	.000	.000	.000	.000	.000	.250	.750	.417	.679

Traffic Data Service

San Jose, CA
(408) 622-4787
tdsbay@cs.com

File Name : 3 FINAL
Site Code : 00000003
Start Date : 3/12/2019
Page No : 5

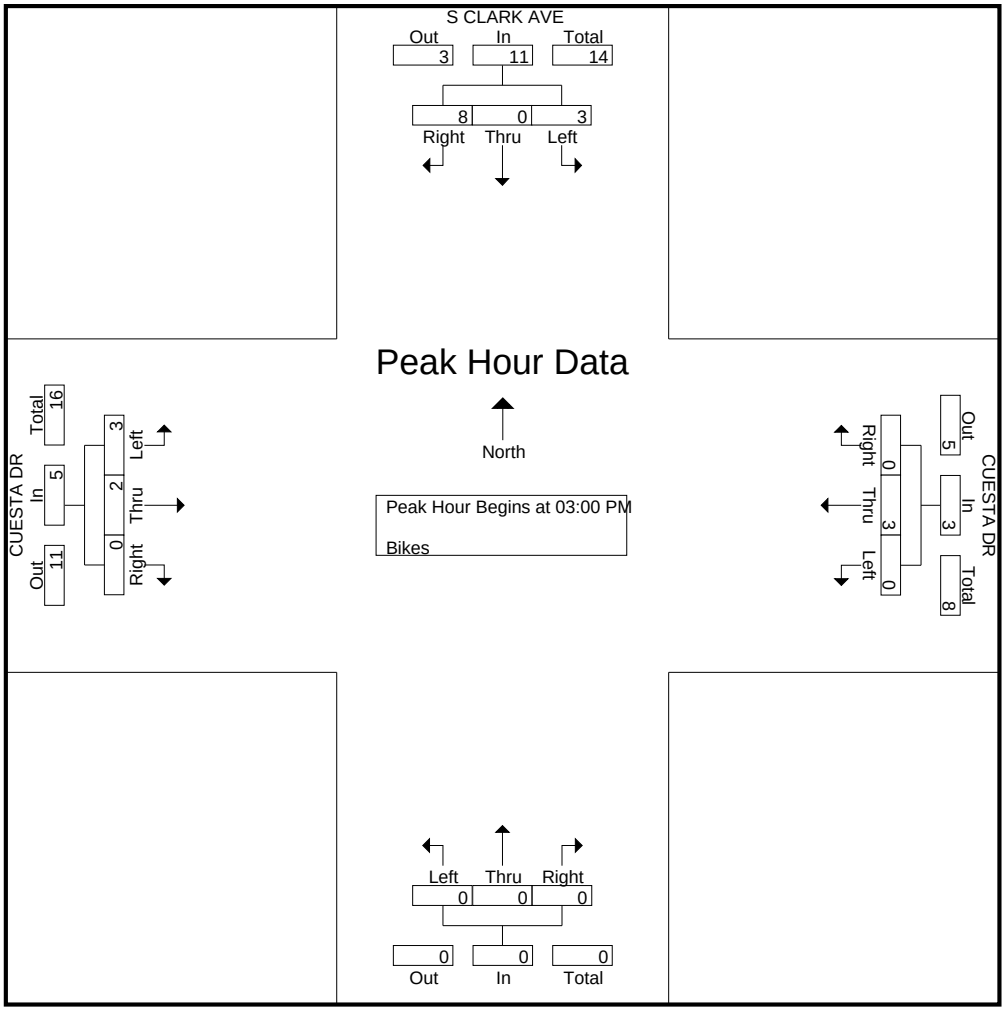

Peak Hour Analysis From 07:00 AM to 06:45 PM - Peak 1 of 1
Peak Hour for Entire Intersection Begins at 07:15 AM

07:15 AM	0	0	0	0	0	2	0	2	0	0	0	0	0	1	0	1	3
07:30 AM	0	0	0	0	0	1	0	1	0	0	0	0	0	0	**4**	4	5
07:45 AM	0	0	0	0	**1**	0	0	1	0	0	0	0	0	**2**	4	**6**	7
08:00 AM	**3**	0	0	**3**	0	**3**	0	**3**	0	0	0	0	0	0	2	2	**8**
Total Volume	3	0	0	3	1	6	0	7	0	0	0	0	0	3	10	13	23
% App. Total	100	0	0		14.3	85.7	0		0	0	0		0	23.1	76.9		
PHF	.250	.000	.000	.250	.250	.500	.000	.583	.000	.000	.000	.000	.000	.375	.625	.542	.719

Traffic Data Service

San Jose, CA
(408) 622-4787
tdsbay@cs.com

File Name : 3 FINAL
Site Code : 00000003
Start Date : 3/12/2019
Page No : 6

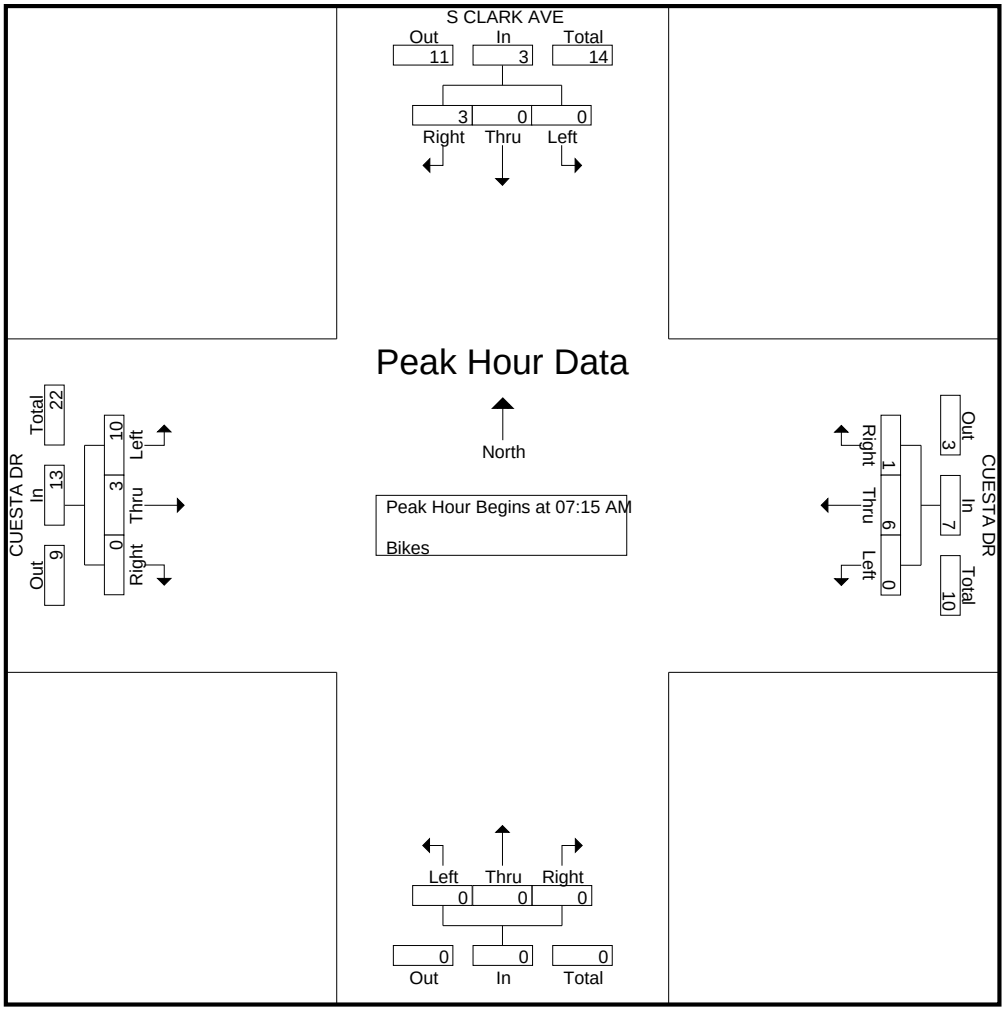

Traffic Data Service

San Jose, CA
(408) 622-4787
tdsbay@cs.com

File Name : 4 FINAL
Site Code : 00000004
Start Date : 3/12/2019
Page No : 1

Groups Printed- Vehicles

	SPRINGER RD Southbound					CUESTA DR Westbound					SPRINGER RD Northbound					CUESTA DR Eastbound					
Start Time	Right	Thru	Left	Peds	App. Total	Right	Thru	Left	Peds	App. Total	Right	Thru	Left	Peds	App. Total	Right	Thru	Left	Peds	App. Total	Int. Total
07:00 AM	1	19	7	0	27	5	52	1	0	58	12	19	0	0	31	3	40	0	0	43	159
07:15 AM	0	22	8	0	30	5	78	8	1	92	26	24	2	3	55	4	54	1	0	59	236
07:30 AM	7	38	15	0	60	6	83	27	0	116	29	43	1	0	73	1	59	3	0	63	312
07:45 AM	9	59	23	1	92	10	74	15	0	99	48	70	7	0	125	6	80	2	2	90	406
Total	17	138	53	1	209	26	287	51	1	365	115	156	10	3	284	14	233	6	2	255	1113
08:00 AM	11	75	24	4	114	4	86	17	2	109	42	83	6	2	133	3	86	8	4	101	457
08:15 AM	11	79	31	0	121	9	85	24	1	119	67	73	3	0	143	12	84	6	0	102	485
08:30 AM	9	48	23	1	81	8	78	16	2	104	49	95	8	0	152	5	85	13	0	103	440
08:45 AM	10	45	17	1	73	9	93	14	2	118	40	74	12	2	128	6	86	9	1	102	421
Total	41	247	95	6	389	30	342	71	7	450	198	325	29	4	556	26	341	36	5	408	1803
09:00 AM	7	37	22	2	68	7	87	11	1	106	24	96	8	0	128	7	70	4	1	82	384
09:15 AM	7	32	21	0	60	10	72	8	2	92	44	74	7	0	125	7	89	3	0	99	376
09:30 AM	5	31	12	1	49	13	81	12	0	106	28	62	10	3	103	4	80	2	1	87	345
09:45 AM	4	31	17	0	52	8	109	10	0	127	26	66	5	0	97	3	104	0	0	107	383
Total	23	131	72	3	229	38	349	41	3	431	122	298	30	3	453	21	343	9	2	375	1488
10:00 AM	5	33	13	0	51	15	106	11	1	133	18	69	10	0	97	3	64	6	0	73	354
10:15 AM	3	26	4	0	33	22	91	17	1	131	30	75	11	1	117	8	59	3	2	72	353
10:30 AM	7	24	14	0	45	14	106	8	0	128	23	83	3	0	109	2	49	3	0	54	336
10:45 AM	1	26	11	1	39	11	59	16	2	88	13	79	6	1	99	6	53	3	0	62	288
Total	16	109	42	1	168	62	362	52	4	480	84	306	30	2	422	19	225	15	2	261	1331
11:00 AM	6	36	18	0	60	12	56	15	1	84	11	51	7	2	71	3	40	3	1	47	262
11:15 AM	3	30	10	1	44	19	51	10	2	82	22	39	3	0	64	6	44	5	0	55	245
11:30 AM	3	46	19	0	68	20	57	15	1	93	16	35	8	0	59	7	44	4	0	55	275
11:45 AM	3	51	25	0	79	22	67	9	1	99	11	60	5	0	76	4	59	3	0	66	320
Total	15	163	72	1	251	73	231	49	5	358	60	185	23	2	270	20	187	15	1	223	1102
12:00 PM	2	60	12	0	74	25	53	8	0	86	24	61	7	0	92	4	53	4	0	61	313
12:15 PM	3	43	17	0	63	20	67	14	0	101	13	57	4	1	75	6	36	0	0	42	281
12:30 PM	2	44	18	0	64	15	49	14	0	78	19	43	9	0	71	5	44	3	0	52	265
12:45 PM	6	51	26	0	83	20	36	11	0	67	13	31	9	0	53	4	46	7	0	57	260
Total	13	198	73	0	284	80	205	47	0	332	69	192	29	1	291	19	179	14	0	212	1119
01:00 PM	8	34	18	1	61	14	44	13	0	71	16	32	10	1	59	5	52	5	2	64	255
01:15 PM	4	41	16	0	61	21	44	10	1	76	13	42	1	0	56	7	40	8	0	55	248
01:30 PM	1	47	23	0	71	14	54	8	0	76	8	29	3	0	40	7	49	3	0	59	246
01:45 PM	3	36	18	0	57	22	50	8	0	80	12	39	6	0	57	2	50	4	0	56	250
Total	16	158	75	1	250	71	192	39	1	303	49	142	20	1	212	21	191	20	2	234	999
02:00 PM	4	35	18	0	57	16	59	13	0	88	8	28	6	0	42	8	45	6	0	59	246
02:15 PM	4	36	16	0	56	13	51	10	0	74	17	34	4	0	55	11	48	3	0	62	247
02:30 PM	3	63	27	0	93	11	58	19	0	88	14	42	5	0	61	4	58	6	0	68	310
02:45 PM	6	66	26	0	98	17	44	9	0	70	19	40	3	0	62	9	54	5	1	69	299
Total	17	200	87	0	304	57	212	51	0	320	58	144	18	0	220	32	205	20	1	258	1102
03:00 PM	9	50	19	0	78	20	56	19	1	96	29	72	6	3	110	8	59	11	1	79	363
03:15 PM	4	46	28	2	80	22	50	20	3	95	27	71	8	2	108	5	79	8	2	94	377
03:30 PM	3	48	25	0	76	19	52	12	2	85	26	67	5	4	102	8	83	3	0	94	357
03:45 PM	1	71	27	0	99	17	51	25	0	93	16	54	6	0	76	5	67	4	0	76	344
Total	17	215	99	2	333	78	209	76	6	369	98	264	25	9	396	26	288	26	3	343	1441
04:00 PM	4	80	18	0	102	19	59	24	0	102	12	49	4	1	66	12	87	7	0	106	376
04:15 PM	3	63	24	0	90	17	58	24	2	101	27	58	4	0	89	4	104	1	0	109	389

Traffic Data Service

San Jose, CA
(408) 622-4787
tdsbay@cs.com

File Name : 4 FINAL
Site Code : 00000004
Start Date : 3/12/2019
Page No : 2

Groups Printed- Vehicles

	SPRINGER RD Southbound					CUESTA DR Westbound					SPRINGER RD Northbound					CUESTA DR Eastbound					
Start Time	Right	Thru	Left	Peds	App. Total	Right	Thru	Left	Peds	App. Total	Right	Thru	Left	Peds	App. Total	Right	Thru	Left	Peds	App. Total	Int. Total
04:30 PM	4	63	24	0	91	27	61	22	0	110	25	52	6	0	83	11	109	5	0	125	409
04:45 PM	4	73	29	0	106	24	72	32	0	128	19	55	7	1	82	5	97	4	0	106	422
Total	15	279	95	0	389	87	250	102	2	441	83	214	21	2	320	32	397	17	0	446	1596
05:00 PM	2	86	30	0	118	16	75	41	2	134	35	55	2	1	93	7	79	10	0	96	441
05:15 PM	1	94	32	0	127	16	72	38	0	126	43	52	10	1	106	5	81	5	0	91	450
05:30 PM	2	86	29	1	118	16	67	25	0	108	29	50	4	0	83	6	94	2	0	102	411
05:45 PM	3	73	32	0	108	15	60	36	0	111	21	40	7	1	69	5	85	3	0	93	381
Total	8	339	123	1	471	63	274	140	2	479	128	197	23	3	351	23	339	20	0	382	1683
06:00 PM	6	75	24	0	105	23	55	33	0	111	28	54	6	1	89	2	90	3	0	95	400
06:15 PM	7	75	26	0	108	16	67	25	0	108	33	47	5	0	85	8	96	3	0	107	408
06:30 PM	1	57	17	0	75	16	88	30	0	134	19	42	1	0	62	1	97	3	0	101	372
06:45 PM	3	61	23	0	87	21	62	23	0	106	12	35	8	1	56	4	70	3	0	77	326
Total	17	268	90	0	375	76	272	111	0	459	92	178	20	2	292	15	353	12	0	380	1506
Grand Total	215	2445	976	16	3652	741	3185	830	31	4787	1156	2601	278	32	4067	268	3281	210	18	3777	16283
Apprch %	5.9	66.9	26.7	0.4		15.5	66.5	17.3	0.6		28.4	64	6.8	0.8		7.1	86.9	5.6	0.5		
Total %	1.3	15	6	0.1	22.4	4.6	19.6	5.1	0.2	29.4	7.1	16	1.7	0.2	25	1.6	20.1	1.3	0.1	23.2	

	SPRINGER RD Southbound				CUESTA DR Westbound				SPRINGER RD Northbound				CUESTA DR Eastbound				
Start Time	Right	Thru	Left	App. Total	Right	Thru	Left	App. Total	Right	Thru	Left	App. Total	Right	Thru	Left	App. Total	Int. Total
Peak Hour Analysis From 07:00 AM to 10:45 AM - Peak 1 of 1																	
Peak Hour for Entire Intersection Begins at 08:00 AM																	
08:00 AM	**11**	75	24	110	4	86	17	107	42	83	6	131	3	**86**	8	97	445
08:15 AM	11	**79**	**31**	**121**	**9**	85	**24**	**118**	**67**	73	3	143	**12**	84	6	102	**484**
08:30 AM	9	48	23	80	8	78	16	102	49	**95**	8	**152**	5	85	**13**	**103**	437
08:45 AM	10	45	17	72	9	**93**	14	116	40	74	**12**	126	6	86	9	101	415
Total Volume	41	247	95	383	30	342	71	443	198	325	29	552	26	341	36	403	1781
% App. Total	10.7	64.5	24.8		6.8	77.2	16		35.9	58.9	5.3		6.5	84.6	8.9		
PHF	.932	.782	.766	.791	.833	.919	.740	.939	.739	.855	.604	.908	.542	.991	.692	.978	.920

Traffic Data Service

San Jose, CA
(408) 622-4787
tdsbay@cs.com

File Name : 4 FINAL
Site Code : 00000004
Start Date : 3/12/2019
Page No : 3

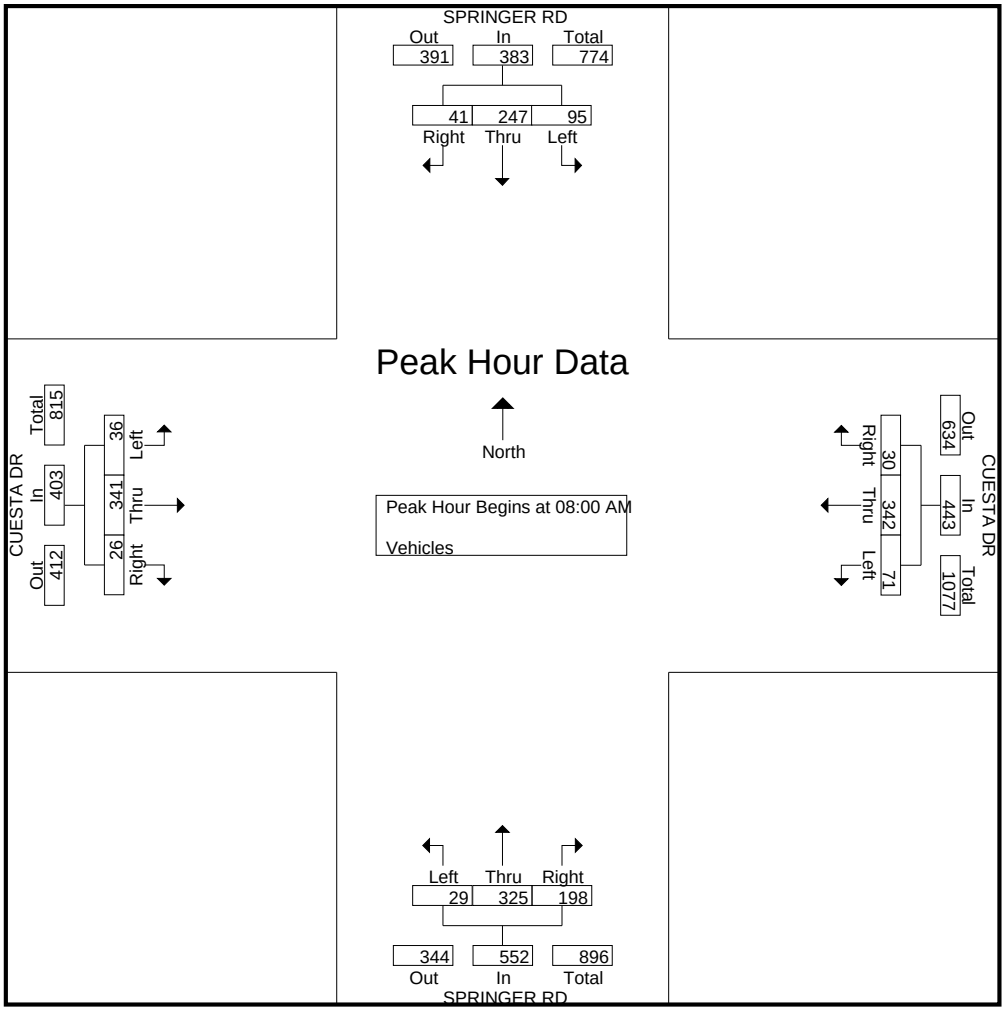

Peak Hour Analysis From 11:00 AM to 02:45 PM - Peak 1 of 1
Peak Hour for Entire Intersection Begins at 11:30 AM

11:30 AM	**3**	46	19	68	20	57	**15**	92	16	35	**8**	59	**7**	44	**4**	55	274
11:45 AM	3	51	**25**	**79**	22	**67**	9	98	11	60	5	76	4	**59**	3	**66**	**319**
12:00 PM	2	**60**	12	74	**25**	53	8	86	**24**	**61**	7	**92**	4	53	4	61	313
12:15 PM	3	43	17	63	20	67	14	**101**	13	57	4	74	6	36	0	42	280
Total Volume	11	200	73	284	87	244	46	377	64	213	24	301	21	192	11	224	1186
% App. Total	3.9	70.4	25.7		23.1	64.7	12.2		21.3	70.8	8		9.4	85.7	4.9		
PHF	.917	.833	.730	.899	.870	.910	.767	.933	.667	.873	.750	.818	.750	.814	.688	.848	.929

Traffic Data Service

San Jose, CA
(408) 622-4787
tdsbay@cs.com

File Name : 4 FINAL
Site Code : 00000004
Start Date : 3/12/2019
Page No : 4

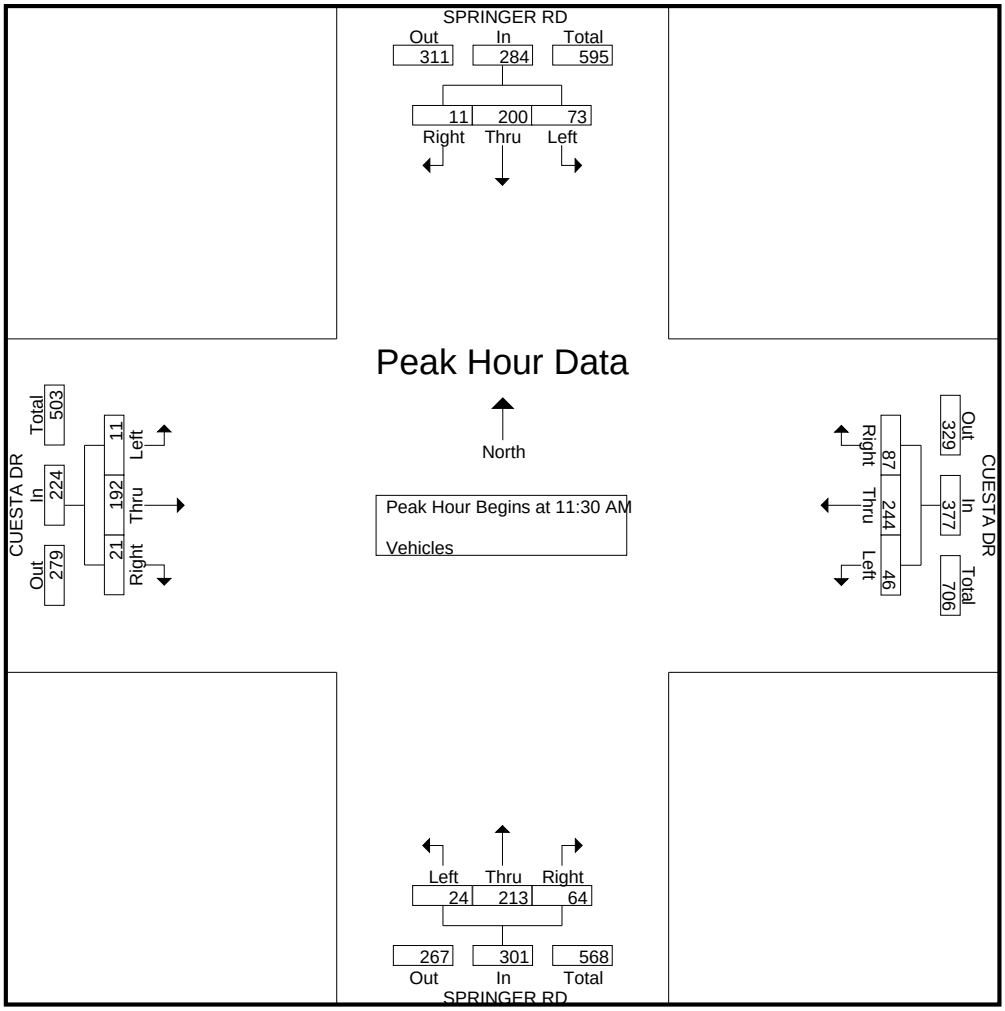

Peak Hour Analysis From 03:00 PM to 06:45 PM - Peak 1 of 1
Peak Hour for Entire Intersection Begins at 04:45 PM

04:45 PM	**4**	73	29	106	**24**	72	32	128	19	**55**	7	81	5	**97**	4	**106**	421
05:00 PM	2	86	30	118	16	**75**	**41**	**132**	35	55	2	92	**7**	79	**10**	96	438
05:15 PM	1	**94**	**32**	**127**	16	72	38	126	**43**	52	**10**	**105**	5	81	5	91	**449**
05:30 PM	2	86	29	117	16	67	25	108	29	50	4	83	6	94	2	102	410
Total Volume	9	339	120	468	72	286	136	494	126	212	23	361	23	351	21	395	1718
% App. Total	1.9	72.4	25.6		14.6	57.9	27.5		34.9	58.7	6.4		5.8	88.9	5.3		
PHF	.563	.902	.938	.921	.750	.953	.829	.936	.733	.964	.575	.860	.821	.905	.525	.932	.957

Traffic Data Service

San Jose, CA
(408) 622-4787
tdsbay@cs.com

File Name : 4 FINAL
Site Code : 00000004
Start Date : 3/12/2019
Page No : 5

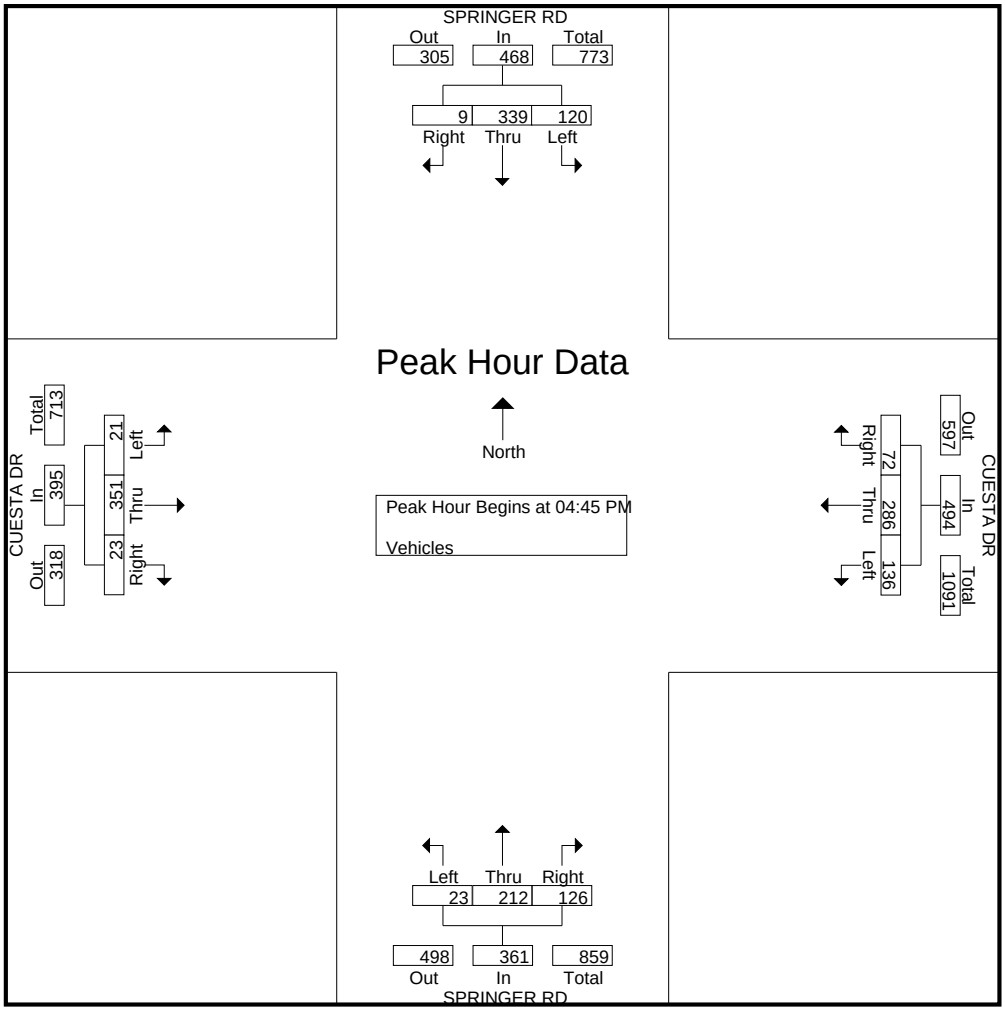

Peak Hour Analysis From 07:00 AM to 06:45 PM - Peak 1 of 1
Peak Hour for Entire Intersection Begins at 08:00 AM

08:00 AM	**11**	75	24	110	4	86	17	107	42	83	6	131	3	**86**	8	97	445
08:15 AM	11	**79**	**31**	**121**	**9**	85	**24**	**118**	**67**	73	3	143	**12**	84	6	102	**484**
08:30 AM	9	48	23	80	8	78	16	102	49	**95**	8	**152**	5	85	**13**	**103**	437
08:45 AM	10	45	17	72	9	**93**	14	116	40	74	**12**	126	6	86	9	101	415
Total Volume	41	247	95	383	30	342	71	443	198	325	29	552	26	341	36	403	1781
% App. Total	10.7	64.5	24.8		6.8	77.2	16		35.9	58.9	5.3		6.5	84.6	8.9		
PHF	.932	.782	.766	.791	.833	.919	.740	.939	.739	.855	.604	.908	.542	.991	.692	.978	.920

Traffic Data Service

San Jose, CA
(408) 622-4787
tdsbay@cs.com

File Name : 4 FINAL
Site Code : 00000004
Start Date : 3/12/2019
Page No : 6

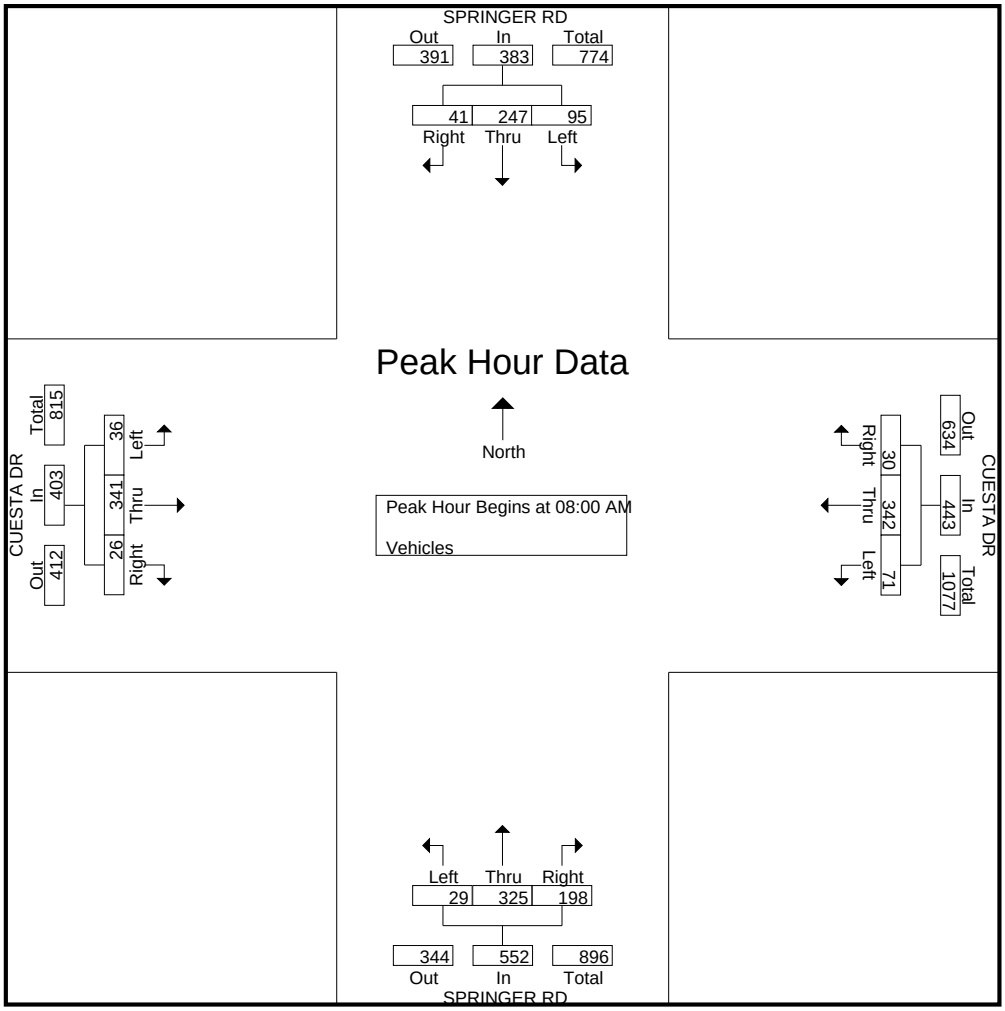

Traffic Data Service

San Jose, CA
(408) 622-4787
tdsbay@cs.com

File Name : 4 FINAL
Site Code : 00000004
Start Date : 3/12/2019
Page No : 1

Groups Printed- Bikes

	SPRINGER RD Southbound					CUESTA DR Westbound					SPRINGER RD Northbound					CUESTA DR Eastbound					
Start Time	Right	Thru	Left	Peds	App. Total	Right	Thru	Left	Peds	App. Total	Right	Thru	Left	Peds	App. Total	Right	Thru	Left	Peds	App. Total	Int. Total
07:00 AM	0	0	0	0	0	0	0	0	0	0	0	0	0	0	0	0	0	0	0	0	0
07:15 AM	0	0	0	0	0	0	3	0	0	3	0	1	0	0	1	0	0	0	0	0	4
07:30 AM	0	0	0	0	0	0	1	0	0	1	0	1	0	0	1	0	0	0	0	0	2
07:45 AM	0	1	0	0	1	0	1	0	0	1	0	2	0	0	2	2	1	0	0	3	7
Total	0	1	0	0	1	0	5	0	0	5	0	4	0	0	4	2	1	0	0	3	13
08:00 AM	0	0	0	0	0	0	1	0	0	1	0	1	0	0	1	0	0	0	0	0	2
08:15 AM	0	0	0	0	0	0	1	0	0	1	0	0	0	0	0	0	0	0	0	0	1
08:30 AM	0	0	0	0	0	0	1	2	0	3	1	1	0	0	2	0	0	0	0	0	5
08:45 AM	0	0	0	0	0	0	2	0	0	2	0	2	0	0	2	0	0	0	0	0	4
Total	0	0	0	0	0	0	5	2	0	7	1	4	0	0	5	0	0	0	0	0	12
09:00 AM	0	0	0	0	0	1	0	0	0	1	1	1	0	0	2	0	1	0	0	1	4
09:15 AM	0	0	0	0	0	0	0	0	0	0	0	0	0	0	0	0	0	0	0	0	0
09:30 AM	0	0	0	0	0	0	1	0	0	1	0	0	0	0	0	0	0	0	0	0	1
09:45 AM	0	0	0	0	0	0	1	0	0	1	0	0	0	0	0	0	0	0	0	0	1
Total	0	0	0	0	0	1	2	0	0	3	1	1	0	0	2	0	1	0	0	1	6
10:00 AM	0	0	0	0	0	0	0	0	0	0	3	0	0	0	3	0	1	0	0	1	4
10:15 AM	0	0	0	0	0	0	0	0	0	0	0	0	0	0	0	0	1	0	0	1	1
10:30 AM	0	1	0	0	1	0	0	0	0	0	0	0	0	0	0	0	0	0	0	0	1
10:45 AM	0	0	0	0	0	0	2	0	0	2	0	0	0	0	0	0	1	0	0	1	3
Total	0	1	0	0	1	0	2	0	0	2	3	0	0	0	3	0	3	0	0	3	9
11:00 AM	0	0	0	0	0	1	0	0	0	1	0	0	0	0	0	0	2	0	0	2	3
11:15 AM	0	0	0	0	0	0	0	0	0	0	0	1	0	0	1	0	0	0	0	0	1
11:30 AM	0	0	0	0	0	0	0	0	0	0	0	0	0	0	0	0	0	0	0	0	0
11:45 AM	0	0	0	0	0	0	0	0	0	0	0	0	0	0	0	0	0	0	0	0	0
Total	0	0	0	0	0	1	0	0	0	1	0	1	0	0	1	0	2	0	0	2	4
12:00 PM	0	0	0	0	0	0	0	0	0	0	1	0	0	0	1	0	0	0	0	0	1
12:15 PM	0	0	0	0	0	0	0	0	0	0	0	0	0	0	0	0	0	1	0	1	1
12:30 PM	0	0	0	0	0	0	0	0	0	0	1	1	0	0	2	0	1	0	0	1	3
12:45 PM	0	1	0	0	1	0	0	0	0	0	0	0	0	0	0	0	0	0	0	0	1
Total	0	1	0	0	1	0	0	0	0	0	2	1	0	0	3	0	1	1	0	2	6
01:00 PM	0	0	0	0	0	0	0	0	0	0	0	0	0	0	0	0	0	0	0	0	0
01:15 PM	0	1	0	0	1	0	0	0	0	0	0	0	0	0	0	0	1	0	0	1	2
01:30 PM	0	0	0	0	0	0	1	0	0	1	1	0	0	0	1	0	0	0	0	0	2
01:45 PM	0	0	0	0	0	0	1	0	0	1	1	0	1	0	2	0	0	0	0	0	3
Total	0	1	0	0	1	0	2	0	0	2	2	0	1	0	3	0	1	0	0	1	7
02:00 PM	0	0	0	0	0	0	0	0	0	0	0	0	0	0	0	0	0	0	0	0	0
02:15 PM	0	0	0	0	0	0	2	0	0	2	1	0	0	0	1	0	0	0	0	0	3
02:30 PM	0	0	0	0	0	0	0	0	0	0	0	0	0	0	0	0	0	0	0	0	0
02:45 PM	0	0	0	0	0	0	0	0	0	0	0	2	0	0	2	0	0	0	0	0	2
Total	0	0	0	0	0	0	2	0	0	2	1	2	0	0	3	0	0	0	0	0	5
03:00 PM	0	1	0	0	1	9	1	0	0	10	0	0	0	0	0	0	0	0	0	0	11
03:15 PM	0	0	0	0	0	3	0	0	0	3	0	3	0	0	3	0	0	0	0	0	6
03:30 PM	0	0	0	0	0	0	0	0	0	0	0	1	0	0	1	0	2	0	0	2	3
03:45 PM	0	2	0	0	2	0	1	0	0	1	0	2	0	0	2	0	0	0	0	0	5
Total	0	3	0	0	3	12	2	0	0	14	0	6	0	0	6	0	2	0	0	2	25
04:00 PM	0	2	0	0	2	0	0	0	0	0	0	1	0	0	1	0	1	0	0	1	4
04:15 PM	0	0	0	0	0	0	0	0	0	0	0	0	0	0	0	0	1	1	0	2	2

Traffic Data Service

San Jose, CA
(408) 622-4787
tdsbay@cs.com

File Name : 4 FINAL
Site Code : 00000004
Start Date : 3/12/2019
Page No : 2

Groups Printed- Bikes

	SPRINGER RD Southbound					CUESTA DR Westbound					SPRINGER RD Northbound					CUESTA DR Eastbound					
Start Time	Right	Thru	Left	Peds	App. Total	Right	Thru	Left	Peds	App. Total	Right	Thru	Left	Peds	App. Total	Right	Thru	Left	Peds	App. Total	Int. Total
04:30 PM	0	0	0	0	0	0	1	0	0	1	0	1	0	0	1	0	0	0	0	0	2
04:45 PM	0	2	0	0	2	0	0	0	0	0	0	0	0	0	0	0	0	0	0	0	2
Total	0	4	0	0	4	0	1	0	0	1	0	2	0	0	2	0	2	1	0	3	10
05:00 PM	1	1	0	0	2	0	0	0	0	0	0	1	0	0	1	0	2	0	0	2	5
05:15 PM	0	2	1	0	3	0	1	0	0	1	0	0	0	0	0	0	0	0	0	0	4
05:30 PM	0	0	1	0	1	0	0	0	0	0	0	1	0	0	1	1	2	0	0	3	5
05:45 PM	0	1	0	0	1	0	2	0	0	2	0	1	1	0	2	0	0	0	0	0	5
Total	1	4	2	0	7	0	3	0	0	3	0	3	1	0	4	1	4	0	0	5	19
06:00 PM	0	1	0	0	1	0	0	0	0	0	0	3	0	0	3	0	1	0	0	1	5
06:15 PM	0	0	0	0	0	0	0	1	0	1	0	1	0	0	1	0	0	0	0	0	2
06:30 PM	0	2	0	0	2	0	0	0	0	0	0	3	0	0	3	0	1	0	0	1	6
06:45 PM	0	0	0	0	0	0	0	0	0	0	0	1	0	0	1	0	1	0	0	1	2
Total	0	3	0	0	3	0	0	1	0	1	0	8	0	0	8	0	3	0	0	3	15
Grand Total	1	18	2	0	21	14	24	3	0	41	10	32	2	0	44	3	20	2	0	25	131
Apprch %	4.8	85.7	9.5	0		34.1	58.5	7.3	0		22.7	72.7	4.5	0		12	80	8	0		
Total %	0.8	13.7	1.5	0	16	10.7	18.3	2.3	0	31.3	7.6	24.4	1.5	0	33.6	2.3	15.3	1.5	0	19.1	

	SPRINGER RD Southbound				CUESTA DR Westbound				SPRINGER RD Northbound				CUESTA DR Eastbound				
Start Time	Right	Thru	Left	App. Total	Right	Thru	Left	App. Total	Right	Thru	Left	App. Total	Right	Thru	Left	App. Total	Int. Total
Peak Hour Analysis From 07:00 AM to 10:45 AM - Peak 1 of 1																	
Peak Hour for Entire Intersection Begins at 07:15 AM																	
07:15 AM	0	0	0	0	0	**3**	0	**3**	0	1	0	1	0	0	0	0	4
07:30 AM	0	0	0	0	0	1	0	1	0	1	0	1	0	0	0	0	2
07:45 AM	0	**1**	0	**1**	0	1	0	1	0	**2**	0	**2**	**2**	**1**	0	**3**	**7**
08:00 AM	0	0	0	0	0	1	0	1	0	1	0	1	0	0	0	0	2
Total Volume	0	1	0	1	0	6	0	6	0	5	0	5	2	1	0	3	15
% App. Total	0	100	0		0	100	0		0	100	0		66.7	33.3	0		
PHF	.000	.250	.000	.250	.000	.500	.000	.500	.000	.625	.000	.625	.250	.250	.000	.250	.536

Traffic Data Service

San Jose, CA
(408) 622-4787
tdsbay@cs.com

File Name : 4 FINAL
Site Code : 00000004
Start Date : 3/12/2019
Page No : 3

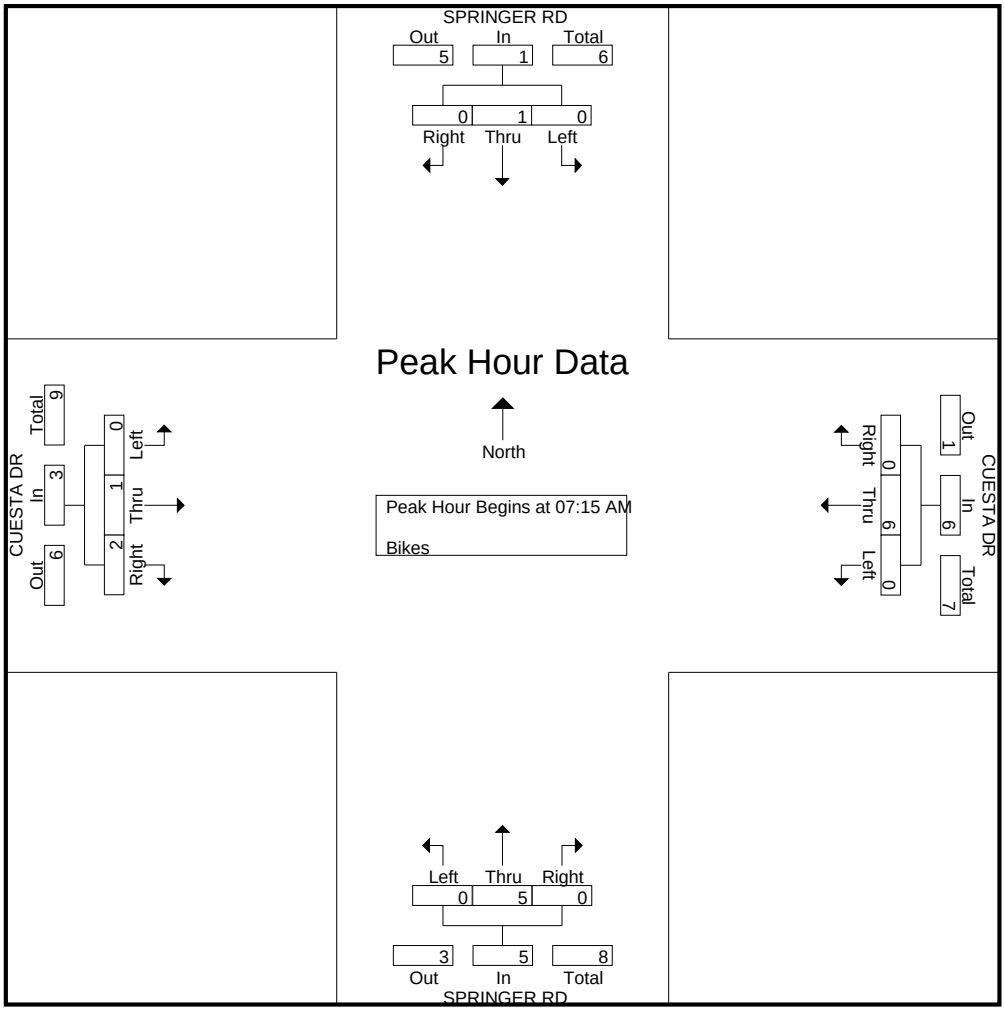

Peak Hour Analysis From 11:00 AM to 02:45 PM - Peak 1 of 1
Peak Hour for Entire Intersection Begins at 01:30 PM

01:30 PM	0	0	0	0	0	1	0	1	**1**	0	0	1	0	0	0	0	2
01:45 PM	0	0	0	0	0	1	0	1	1	0	**1**	**2**	0	0	0	0	**3**
02:00 PM	0	0	0	0	0	0	0	0	0	0	0	0	0	0	0	0	0
02:15 PM	0	0	0	0	0	**2**	0	**2**	1	0	0	1	0	0	0	0	3
Total Volume	0	0	0	0	0	4	0	4	3	0	1	4	0	0	0	0	8
% App. Total	0	0	0		0	100	0		75	0	25		0	0	0		
PHF	.000	.000	.000	.000	.000	.500	.000	.500	.750	.000	.250	.500	.000	.000	.000	.000	.667

Traffic Data Service

San Jose, CA
(408) 622-4787
tdsbay@cs.com

File Name : 4 FINAL
Site Code : 00000004
Start Date : 3/12/2019
Page No : 4

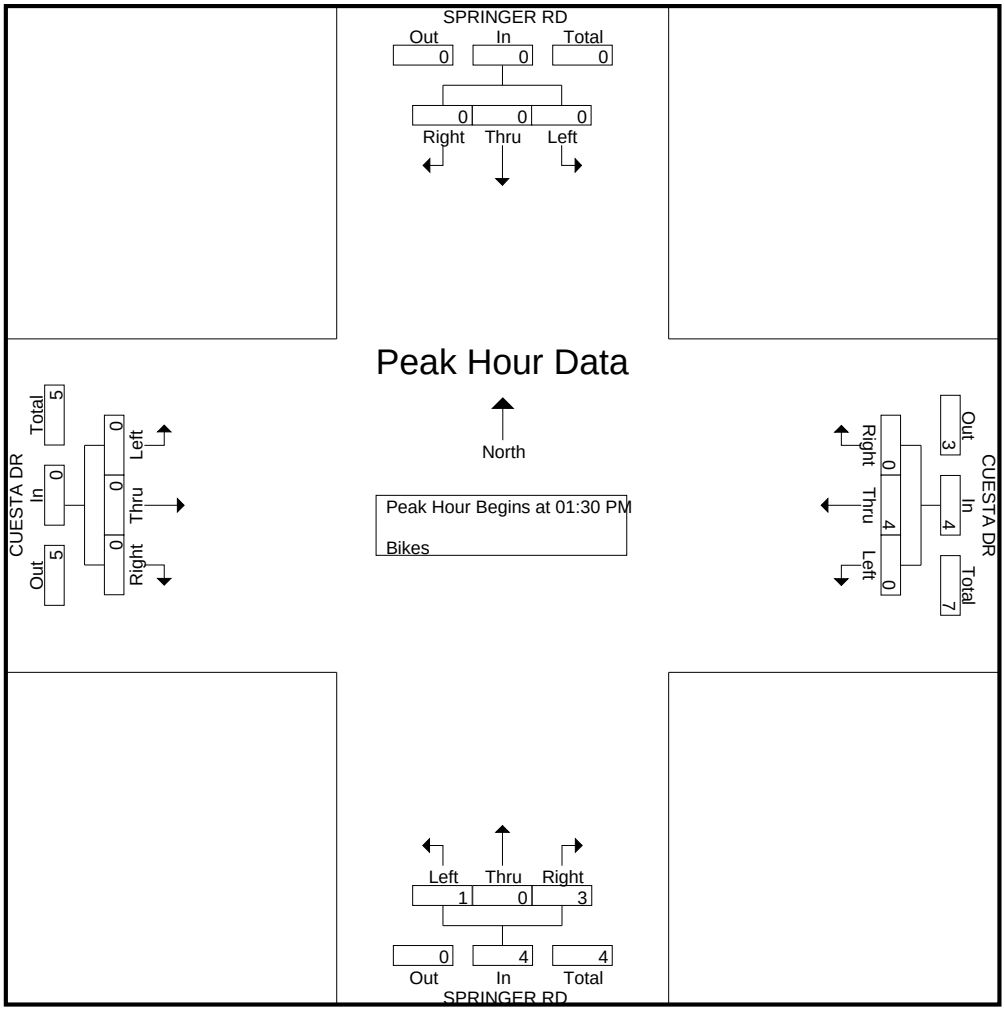

Peak Hour Analysis From 03:00 PM to 06:45 PM - Peak 1 of 1
Peak Hour for Entire Intersection Begins at 03:00 PM

03:00 PM	0	1	0	1	**9**	**1**	0	**10**	0	0	0	0	0	0	0	0	**11**
03:15 PM	0	0	0	0	3	0	0	3	0	**3**	0	**3**	0	0	0	0	6
03:30 PM	0	0	0	0	0	0	0	0	0	1	0	1	0	**2**	0	**2**	3
03:45 PM	0	**2**	0	**2**	0	1	0	1	0	2	0	2	0	0	0	0	5
Total Volume	0	3	0	3	12	2	0	14	0	6	0	6	0	2	0	2	25
% App. Total	0	100	0		85.7	14.3	0		0	100	0		0	100	0		
PHF	.000	.375	.000	.375	.333	.500	.000	.350	.000	.500	.000	.500	.000	.250	.000	.250	.568

Traffic Data Service

San Jose, CA
(408) 622-4787
tdsbay@cs.com

File Name : 4 FINAL
Site Code : 00000004
Start Date : 3/12/2019
Page No : 5

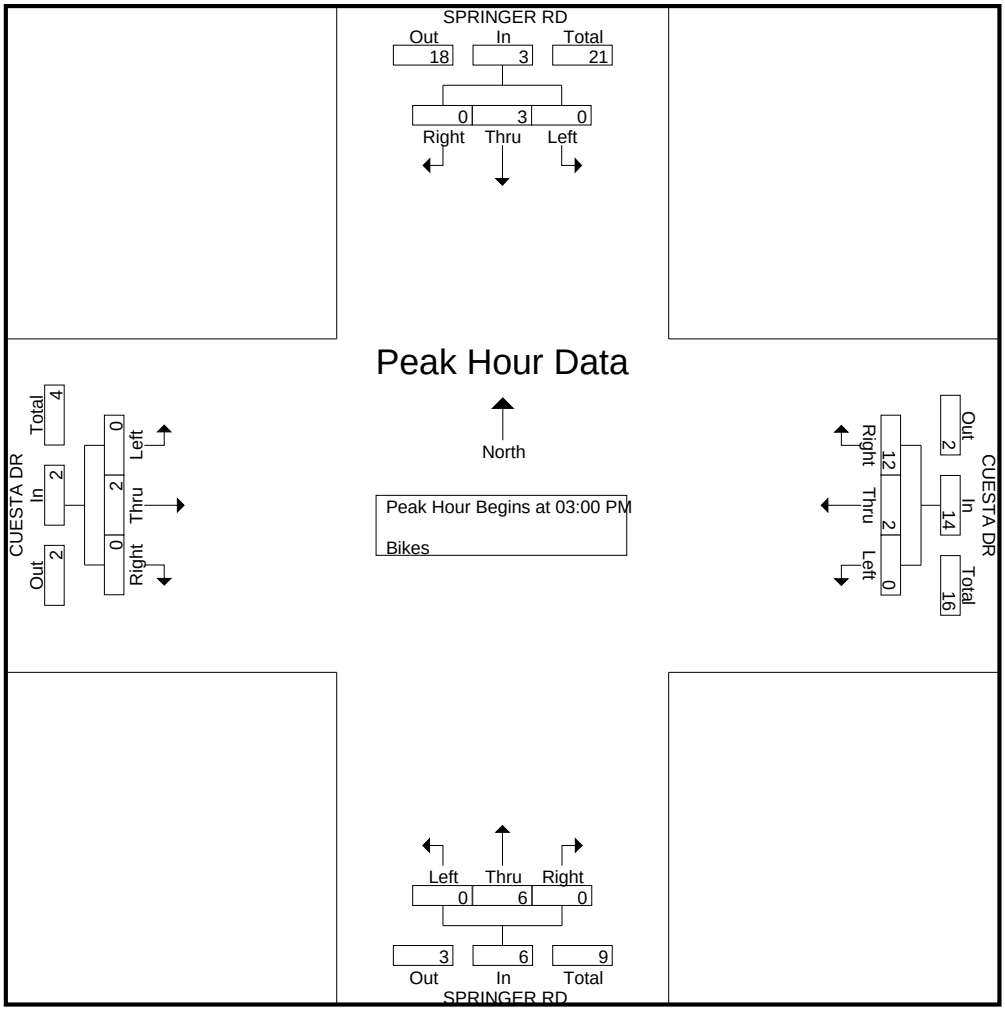

Peak Hour Analysis From 07:00 AM to 06:45 PM - Peak 1 of 1
Peak Hour for Entire Intersection Begins at 03:00 PM

03:00 PM	0	1	0	1	**9**	**1**	0	**10**	0	0	0	0	0	0	0	0	**11**
03:15 PM	0	0	0	0	3	0	0	3	0	**3**	0	**3**	0	0	0	0	6
03:30 PM	0	0	0	0	0	0	0	0	0	1	0	1	0	**2**	0	**2**	3
03:45 PM	0	**2**	0	**2**	0	1	0	1	0	2	0	2	0	0	0	0	5
Total Volume	0	3	0	3	12	2	0	14	0	6	0	6	0	2	0	2	25
% App. Total	0	100	0		85.7	14.3	0		0	100	0		0	100	0		
PHF	.000	.375	.000	.375	.333	.500	.000	.350	.000	.500	.000	.500	.000	.250	.000	.250	.568

Traffic Data Service

San Jose, CA
(408) 622-4787
tdsbay@cs.com

File Name : 4 FINAL
Site Code : 00000004
Start Date : 3/12/2019
Page No : 6

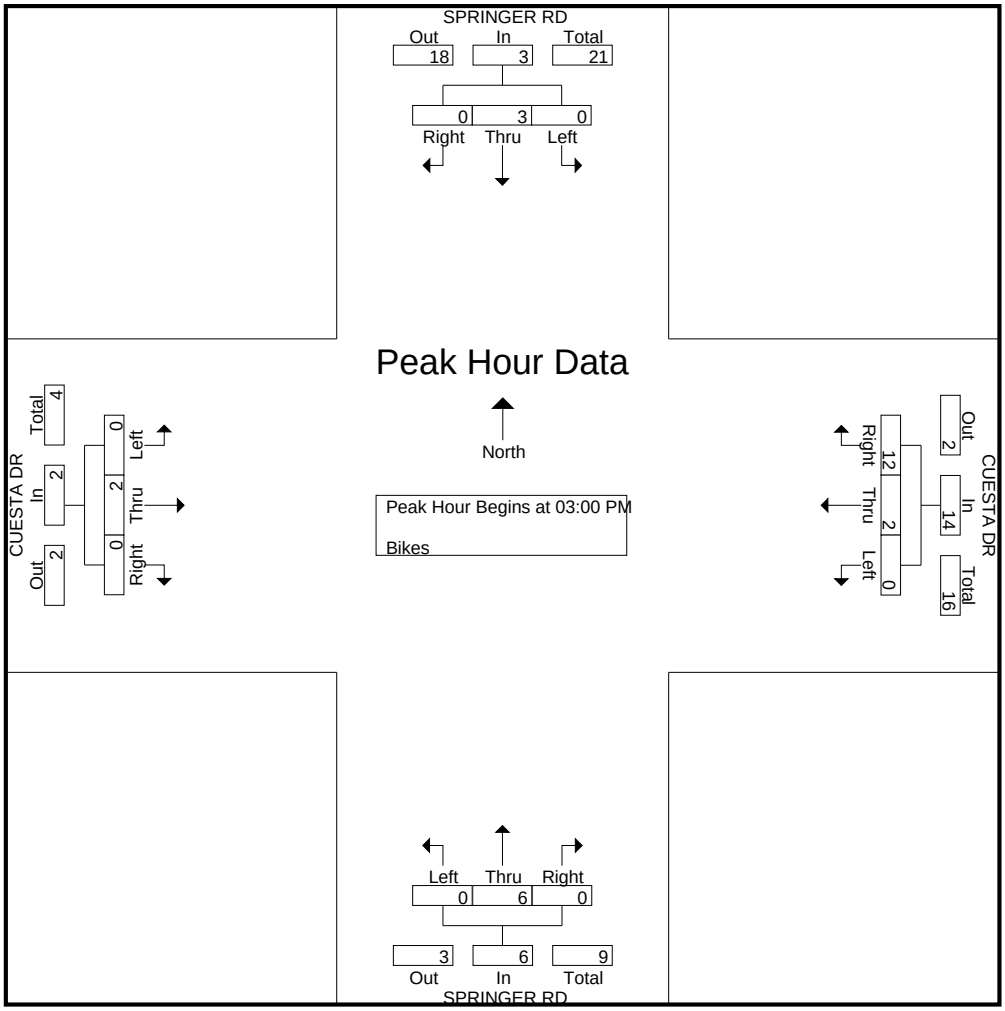

Traffic Data Service

San Jose, CA
(408) 622-4787
tdsbay@cs.com

File Name : 5 FINAL
Site Code : 00000005
Start Date : 3/12/2019
Page No : 1

Groups Printed- Vehicles

	CAMPBELL AVE Southbound					ARBOLEDA DR Westbound					CAMPBELL AVE Northbound					ARBOLEDA DR Eastbound					
Start Time	Right	Thru	Left	Peds	App. Total	Right	Thru	Left	Peds	App. Total	Right	Thru	Left	Peds	App. Total	Right	Thru	Left	Peds	App. Total	Int. Total
07:00 AM	0	6	0	0	6	0	0	0	0	0	0	9	0	1	10	1	0	2	0	3	19
07:15 AM	0	6	1	0	7	1	0	0	0	1	0	10	0	0	10	0	0	0	0	0	18
07:30 AM	1	12	0	0	13	1	0	3	0	4	1	17	0	1	19	2	0	1	0	3	39
07:45 AM	1	29	0	0	30	2	0	0	0	2	1	42	0	0	43	1	0	2	1	4	79
Total	2	53	1	0	56	4	0	3	0	7	2	78	0	2	82	4	0	5	1	10	155
08:00 AM	1	56	2	1	60	4	0	4	0	8	1	35	1	0	37	10	1	2	1	14	119
08:15 AM	3	70	0	0	73	5	2	5	0	12	4	52	0	0	56	10	4	1	2	17	158
08:30 AM	2	21	1	0	24	1	1	4	0	6	2	53	0	0	55	4	2	2	0	8	93
08:45 AM	0	15	3	0	18	2	0	1	0	3	0	28	0	0	28	0	2	0	2	4	53
Total	6	162	6	1	175	12	3	14	0	29	7	168	1	0	176	24	9	5	5	43	423
09:00 AM	2	11	0	0	13	0	0	0	1	1	2	23	0	0	25	2	3	1	1	7	46
09:15 AM	0	7	0	0	7	1	1	0	1	3	0	18	0	1	19	0	2	0	2	4	33
09:30 AM	0	11	2	0	13	3	1	0	0	4	1	17	0	2	20	3	0	0	4	7	44
09:45 AM	0	10	0	0	10	3	0	0	2	5	0	18	0	0	18	0	2	1	0	3	36
Total	2	39	2	0	43	7	2	0	4	13	3	76	0	3	82	5	7	2	7	21	159
10:00 AM	0	7	0	0	7	3	2	0	0	5	0	19	0	0	19	0	1	0	0	1	32
10:15 AM	1	6	3	0	10	2	1	1	1	5	0	18	1	0	19	1	1	0	0	2	36
10:30 AM	1	7	0	0	8	2	0	1	0	3	0	6	0	0	6	4	0	1	0	5	22
10:45 AM	1	9	0	0	10	0	0	0	0	0	0	14	3	0	17	0	2	3	0	5	32
Total	3	29	3	0	35	7	3	2	1	13	0	57	4	0	61	5	4	4	0	13	122
11:00 AM	0	12	2	0	14	0	1	0	0	1	0	11	0	0	11	1	0	1	1	3	29
11:15 AM	0	12	3	1	16	0	0	0	1	1	0	20	0	0	20	0	1	0	1	2	39
11:30 AM	0	7	0	0	7	1	0	0	0	1	0	13	1	0	14	1	0	0	0	1	23
11:45 AM	0	19	1	0	20	1	1	0	0	2	0	12	1	0	13	3	0	1	2	6	41
Total	0	50	6	1	57	2	2	0	1	5	0	56	2	0	58	5	1	2	4	12	132
12:00 PM	1	12	0	0	13	1	1	0	2	4	0	13	0	1	14	1	0	0	1	2	33
12:15 PM	2	10	1	0	13	2	0	0	0	2	0	14	1	1	16	2	2	0	0	4	35
12:30 PM	0	9	2	0	11	2	1	2	0	5	1	9	0	0	10	2	0	1	1	4	30
12:45 PM	1	6	3	0	10	0	0	1	0	1	0	14	0	0	14	2	1	2	0	5	30
Total	4	37	6	0	47	5	2	3	2	12	1	50	1	2	54	7	3	3	2	15	128
01:00 PM	0	7	0	0	7	1	1	0	0	2	0	10	1	0	11	1	3	0	0	4	24
01:15 PM	0	7	2	0	9	1	1	0	1	3	0	8	0	1	9	2	1	0	2	5	26
01:30 PM	3	9	0	0	12	1	0	1	0	2	1	13	1	0	15	1	0	0	0	1	30
01:45 PM	0	14	2	0	16	2	1	0	0	3	0	9	0	0	9	1	1	1	0	3	31
Total	3	37	4	0	44	5	3	1	1	10	1	40	2	1	44	5	5	1	2	13	111
02:00 PM	0	13	2	0	15	2	1	0	0	3	0	15	0	0	15	1	1	0	0	2	35
02:15 PM	0	18	0	0	18	2	0	0	0	2	0	8	1	0	9	1	1	0	0	2	31
02:30 PM	0	18	4	0	22	1	0	0	0	1	1	15	0	0	16	4	0	0	1	5	44
02:45 PM	0	57	1	0	58	0	1	1	0	2	0	21	0	1	22	4	1	0	0	5	87
Total	0	106	7	0	113	5	2	1	0	8	1	59	1	1	62	10	3	0	1	14	197
03:00 PM	0	32	3	0	35	1	1	0	0	2	0	40	0	0	40	6	2	2	1	11	88
03:15 PM	0	24	2	0	26	2	0	4	0	6	1	25	0	0	26	2	2	0	1	5	63
03:30 PM	0	26	3	0	29	4	0	0	0	4	1	24	1	0	26	2	1	1	3	7	66
03:45 PM	1	22	1	0	24	4	1	1	0	6	1	16	2	0	19	5	2	0	3	10	59
Total	1	104	9	0	114	11	2	5	0	18	3	105	3	0	111	15	7	3	8	33	276
04:00 PM	1	27	3	0	31	1	2	0	0	3	0	11	1	0	12	5	2	1	2	10	56
04:15 PM	0	24	5	0	29	1	0	1	0	2	0	22	1	0	23	2	5	0	0	7	61

Traffic Data Service

San Jose, CA
(408) 622-4787
tdsbay@cs.com

File Name : 5 FINAL
Site Code : 00000005
Start Date : 3/12/2019
Page No : 2

Groups Printed- Vehicles

	CAMPBELL AVE Southbound					ARBOLEDA DR Westbound					CAMPBELL AVE Northbound					ARBOLEDA DR Eastbound					
Start Time	Right	Thru	Left	Peds	App. Total	Right	Thru	Left	Peds	App. Total	Right	Thru	Left	Peds	App. Total	Right	Thru	Left	Peds	App. Total	Int. Total
04:30 PM	0	21	3	0	24	1	0	1	0	2	0	15	0	2	17	4	4	0	1	9	52
04:45 PM	0	27	3	0	30	1	0	0	0	1	0	22	0	0	22	6	4	2	1	13	66
Total	1	99	14	0	114	4	2	2	0	8	0	70	2	2	74	17	15	3	4	39	235
05:00 PM	1	38	8	0	47	1	0	2	0	3	0	20	0	0	20	2	13	0	1	16	86
05:15 PM	0	39	10	0	49	2	3	3	0	8	1	14	2	3	20	2	9	0	0	11	88
05:30 PM	1	38	3	0	42	2	0	0	0	2	1	18	1	2	22	4	5	1	1	11	77
05:45 PM	0	36	2	0	38	0	1	1	1	3	1	15	0	0	16	1	1	0	0	2	59
Total	2	151	23	0	176	5	4	6	1	16	3	67	3	5	78	9	28	1	2	40	310
06:00 PM	0	18	5	0	23	1	0	1	0	2	0	9	0	0	9	4	2	1	3	10	44
06:15 PM	1	22	6	0	29	0	0	1	2	3	1	9	1	4	15	4	12	0	1	17	64
06:30 PM	0	23	5	0	28	2	1	2	0	5	0	16	0	0	16	3	3	3	0	9	58
06:45 PM	1	17	3	0	21	3	1	2	0	6	0	11	1	0	12	0	2	0	0	2	41
Total	2	80	19	0	101	6	2	6	2	16	1	45	2	4	52	11	19	4	4	38	207
Grand Total	26	947	100	2	1075	73	27	43	12	155	22	871	21	20	934	117	101	33	40	291	2455
Apprch %	2.4	88.1	9.3	0.2		47.1	17.4	27.7	7.7		2.4	93.3	2.2	2.1		40.2	34.7	11.3	13.7		
Total %	1.1	38.6	4.1	0.1	43.8	3	1.1	1.8	0.5	6.3	0.9	35.5	0.9	0.8	38	4.8	4.1	1.3	1.6	11.9	

	CAMPBELL AVE Southbound				ARBOLEDA DR Westbound				CAMPBELL AVE Northbound				ARBOLEDA DR Eastbound				
Start Time	Right	Thru	Left	App. Total	Right	Thru	Left	App. Total	Right	Thru	Left	App. Total	Right	Thru	Left	App. Total	Int. Total
Peak Hour Analysis From 07:00 AM to 10:45 AM - Peak 1 of 1																	
Peak Hour for Entire Intersection Begins at 07:45 AM																	
07:45 AM	1	29	0	30	2	0	0	2	1	42	0	43	1	0	**2**	3	78
08:00 AM	1	56	**2**	59	4	0	4	8	1	35	**1**	37	**10**	1	2	13	117
08:15 AM	**3**	**70**	0	**73**	**5**	**2**	**5**	**12**	**4**	52	0	**56**	10	**4**	1	**15**	**156**
08:30 AM	2	21	1	24	1	1	4	6	2	**53**	0	55	4	2	2	8	93
Total Volume	7	176	3	186	12	3	13	28	8	182	1	191	25	7	7	39	444
% App. Total	3.8	94.6	1.6		42.9	10.7	46.4		4.2	95.3	0.5		64.1	17.9	17.9		
PHF	.583	.629	.375	.637	.600	.375	.650	.583	.500	.858	.250	.853	.625	.438	.875	.650	.712

Traffic Data Service

San Jose, CA
(408) 622-4787
tdsbay@cs.com

File Name : 5 FINAL
Site Code : 00000005
Start Date : 3/12/2019
Page No : 3

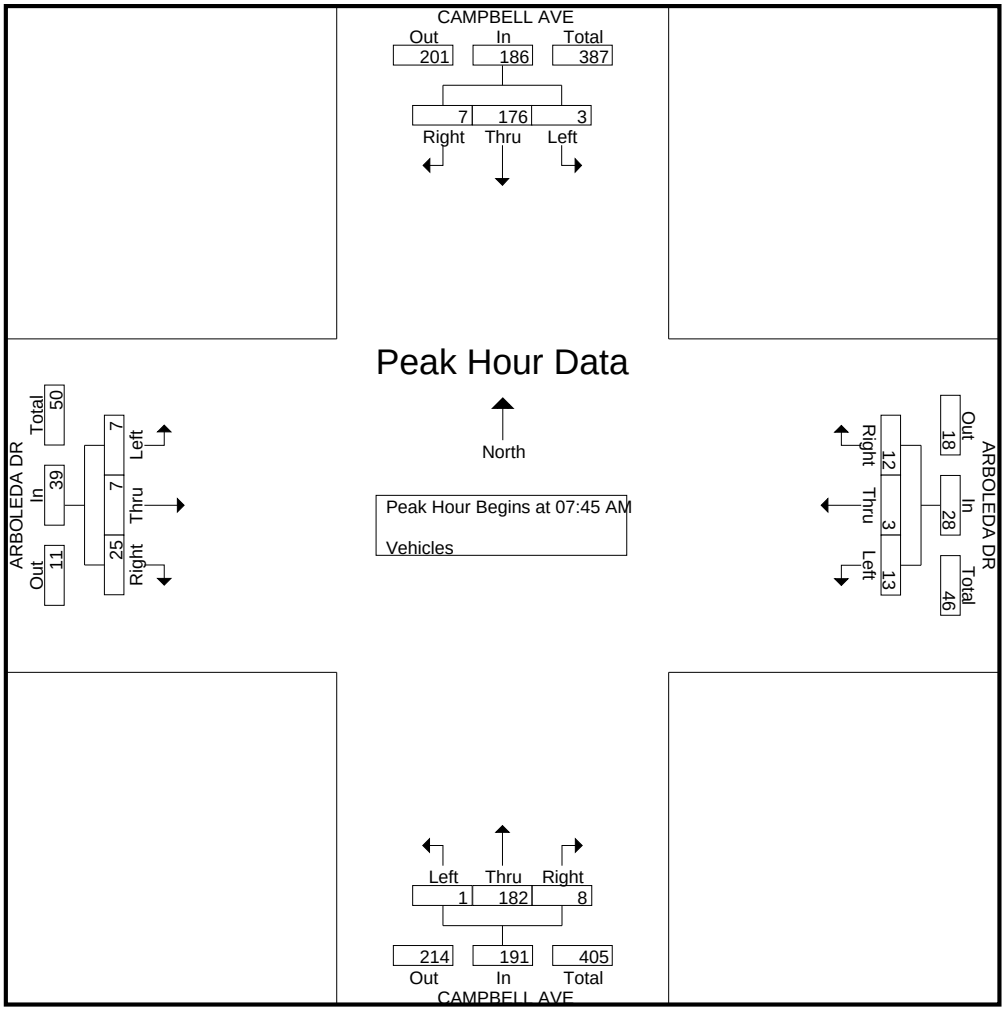

Peak Hour Analysis From 11:00 AM to 02:45 PM - Peak 1 of 1
Peak Hour for Entire Intersection Begins at 02:00 PM

02:00 PM	0	13	2	15	**2**	**1**	0	**3**	0	15	0	15	1	**1**	0	2	35
02:15 PM	0	18	0	18	2	0	0	2	0	8	**1**	9	1	1	0	2	31
02:30 PM	0	18	**4**	22	1	0	0	1	**1**	15	0	16	**4**	0	0	4	43
02:45 PM	0	**57**	1	**58**	0	1	**1**	2	0	**21**	0	**21**	4	1	0	**5**	**86**
Total Volume	0	106	7	113	5	2	1	8	1	59	1	61	10	3	0	13	195
% App. Total	0	93.8	6.2		62.5	25	12.5		1.6	96.7	1.6		76.9	23.1	0		
PHF	.000	.465	.438	.487	.625	.500	.250	.667	.250	.702	.250	.726	.625	.750	.000	.650	.567

Traffic Data Service

San Jose, CA
(408) 622-4787
tdsbay@cs.com

File Name : 5 FINAL
Site Code : 00000005
Start Date : 3/12/2019
Page No : 4

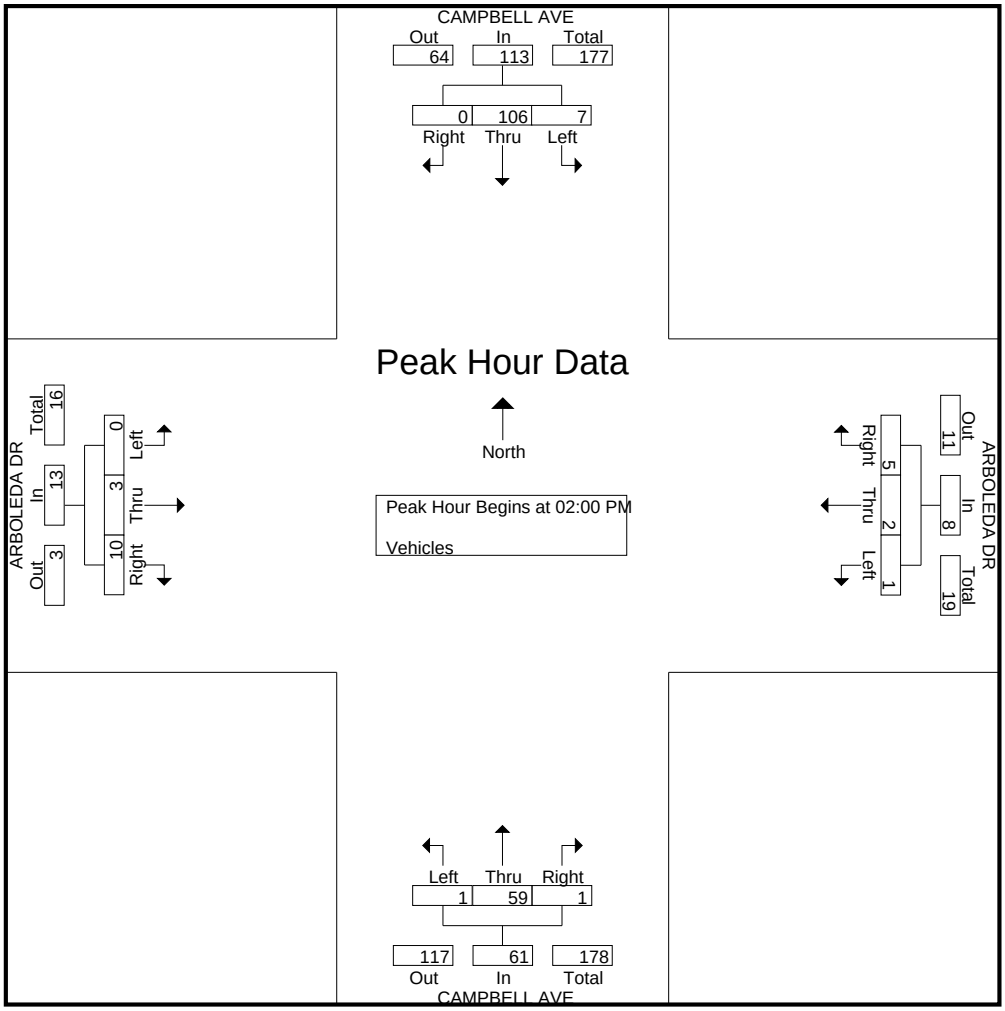

Peak Hour Analysis From 03:00 PM to 06:45 PM - Peak 1 of 1
Peak Hour for Entire Intersection Begins at 04:45 PM

04:45 PM	0	27	3	30	1	0	0	1	0	**22**	0	**22**	**6**	4	**2**	12	65
05:00 PM	**1**	38	8	47	1	0	2	3	0	20	0	20	2	**13**	0	**15**	**85**
05:15 PM	0	**39**	**10**	**49**	**2**	**3**	**3**	**8**	**1**	14	**2**	17	2	9	0	11	85
05:30 PM	1	38	3	42	2	0	0	2	1	18	1	20	4	5	1	10	74
Total Volume	2	142	24	168	6	3	5	14	2	74	3	79	14	31	3	48	309
% App. Total	1.2	84.5	14.3		42.9	21.4	35.7		2.5	93.7	3.8		29.2	64.6	6.2		
PHF	.500	.910	.600	.857	.750	.250	.417	.438	.500	.841	.375	.898	.583	.596	.375	.800	.909

Traffic Data Service

San Jose, CA
(408) 622-4787
tdsbay@cs.com

File Name : 5 FINAL
Site Code : 00000005
Start Date : 3/12/2019
Page No : 5

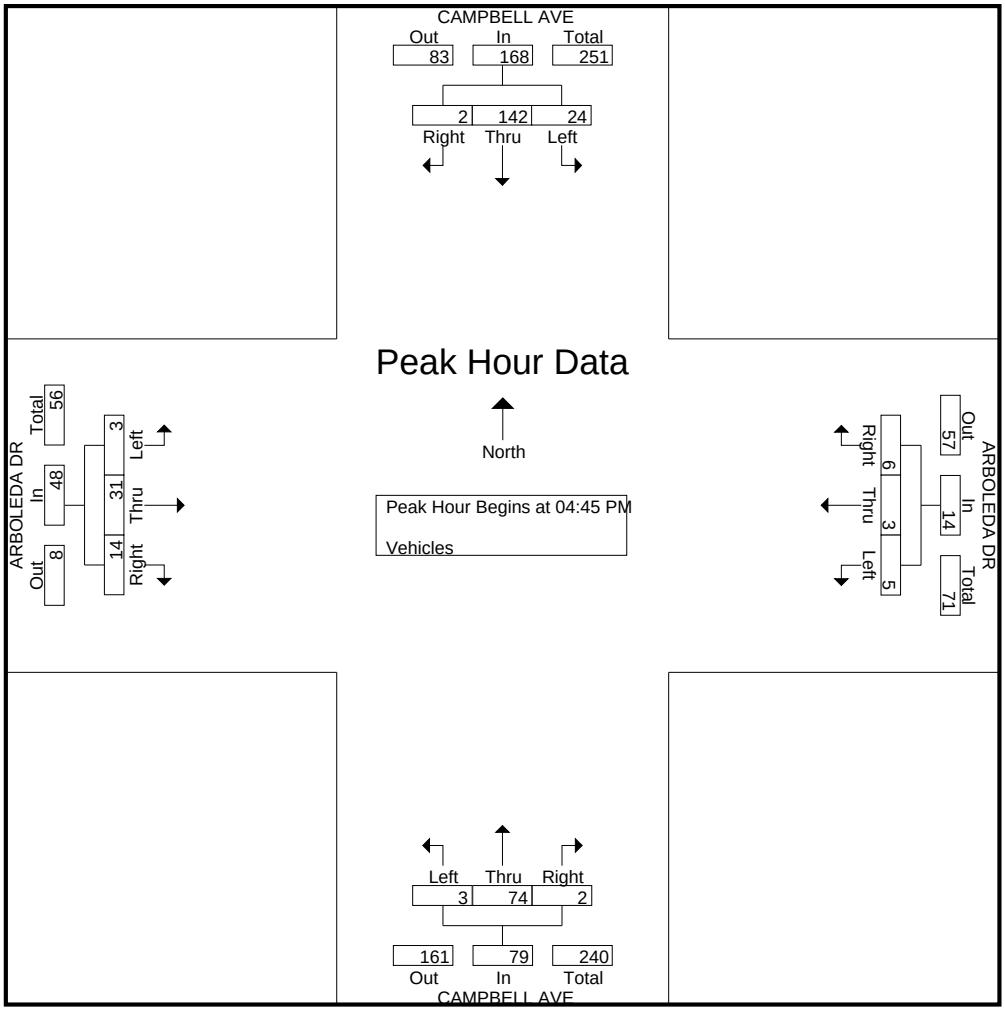

Peak Hour Analysis From 07:00 AM to 06:45 PM - Peak 1 of 1
Peak Hour for Entire Intersection Begins at 07:45 AM

07:45 AM	1	29	0	30	2	0	0	2	1	42	0	43	1	0	**2**	3	78
08:00 AM	1	56	**2**	59	4	0	4	8	1	35	**1**	37	**10**	1	2	13	117
08:15 AM	**3**	**70**	0	**73**	**5**	**2**	**5**	**12**	**4**	52	0	**56**	10	**4**	1	**15**	**156**
08:30 AM	2	21	1	24	1	1	4	6	2	**53**	0	55	4	2	2	8	93
Total Volume	7	176	3	186	12	3	13	28	8	182	1	191	25	7	7	39	444
% App. Total	3.8	94.6	1.6		42.9	10.7	46.4		4.2	95.3	0.5		64.1	17.9	17.9		
PHF	.583	.629	.375	.637	.600	.375	.650	.583	.500	.858	.250	.853	.625	.438	.875	.650	.712

Traffic Data Service

San Jose, CA
(408) 622-4787
tdsbay@cs.com

File Name : 5 FINAL
Site Code : 00000005
Start Date : 3/12/2019
Page No : 6

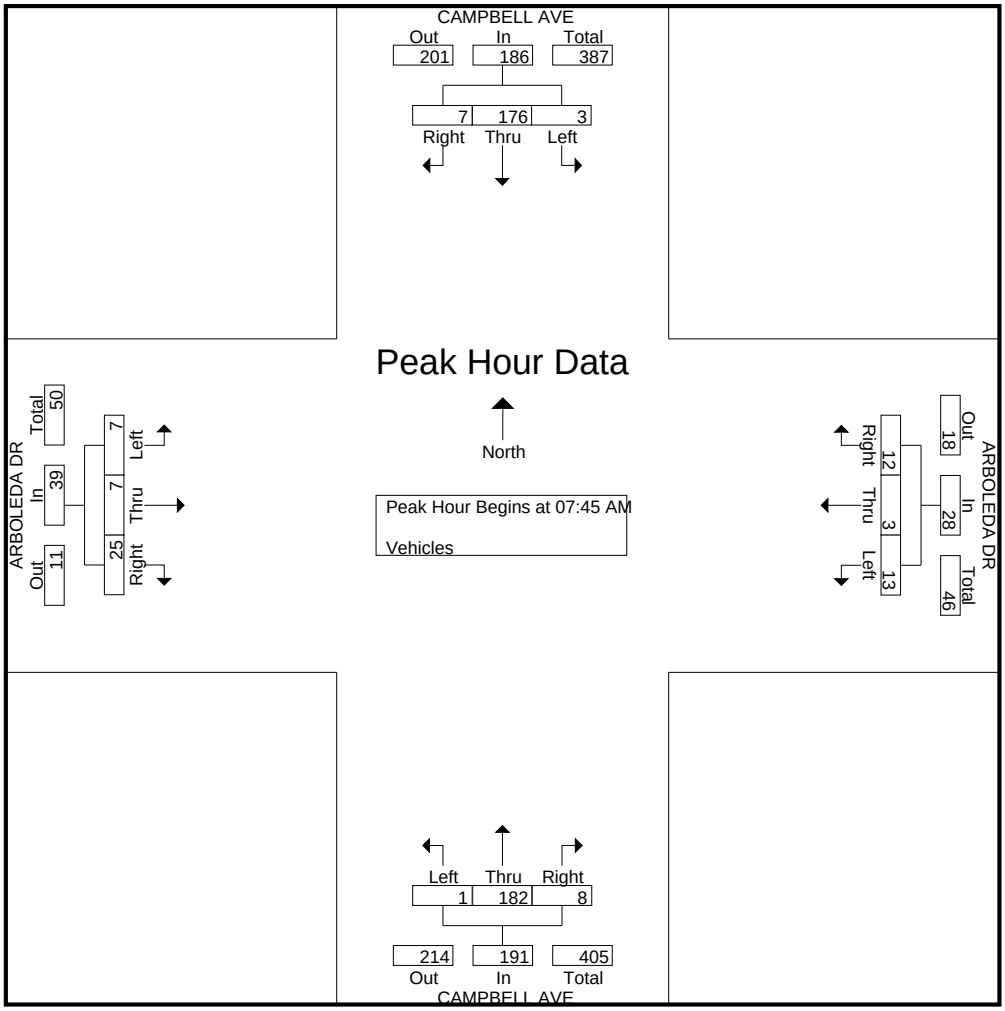

Traffic Data Service

San Jose, CA
(408) 622-4787
tdsbay@cs.com

File Name : 5 FINAL
Site Code : 00000005
Start Date : 3/12/2019
Page No : 1

Groups Printed- Bikes

	CAMPBELL AVE Southbound					ARBOLEDA DR Westbound					CAMPBELL AVE Northbound					ARBOLEDA DR Eastbound					
Start Time	Right	Thru	Left	Peds	App. Total	Right	Thru	Left	Peds	App. Total	Right	Thru	Left	Peds	App. Total	Right	Thru	Left	Peds	App. Total	Int. Total
07:00 AM	0	0	0	0	0	0	0	0	0	0	0	0	0	0	0	0	0	0	0	0	0
07:15 AM	0	0	0	0	0	0	0	0	0	0	0	1	0	0	1	0	0	0	0	0	1
07:30 AM	0	1	0	0	1	0	2	0	0	2	0	5	0	0	5	0	0	0	0	0	8
07:45 AM	0	0	0	0	0	4	0	0	0	4	0	2	0	0	2	0	0	0	0	0	6
Total	0	1	0	0	1	4	2	0	0	6	0	8	0	0	8	0	0	0	0	0	15
08:00 AM	0	3	0	0	3	1	0	0	0	1	0	1	0	0	1	0	0	0	0	0	5
08:15 AM	1	1	0	0	2	0	0	1	0	1	0	0	0	0	0	0	0	0	0	0	3
08:30 AM	0	0	1	0	1	0	0	0	0	0	0	0	0	0	0	0	0	0	0	0	1
08:45 AM	0	0	0	0	0	1	0	0	0	1	0	0	0	0	0	0	0	0	0	0	1
Total	1	4	1	0	6	2	0	1	0	3	0	1	0	0	1	0	0	0	0	0	10
09:00 AM	0	0	0	0	0	0	0	0	0	0	0	0	0	0	0	0	0	0	0	0	0
09:15 AM	0	0	0	0	0	0	0	0	0	0	0	1	0	0	1	0	0	0	0	0	1
09:30 AM	0	0	0	0	0	0	0	0	0	0	0	0	0	0	0	0	0	0	0	0	0
09:45 AM	0	1	0	0	1	0	0	0	0	0	0	1	0	0	1	0	0	0	0	0	2
Total	0	1	0	0	1	0	0	0	0	0	0	2	0	0	2	0	0	0	0	0	3
10:00 AM	0	0	0	0	0	0	0	0	0	0	0	0	0	0	0	1	0	0	0	1	1
10:15 AM	0	0	0	0	0	0	0	0	0	0	0	0	0	0	0	0	1	0	0	1	1
10:30 AM	0	0	0	0	0	1	0	0	0	1	0	0	0	0	0	0	0	0	0	0	1
10:45 AM	0	0	0	0	0	0	0	0	0	0	0	0	0	0	0	0	0	0	0	0	0
Total	0	0	0	0	0	1	0	0	0	1	0	0	0	0	0	1	1	0	0	2	3
11:00 AM	0	0	0	0	0	0	0	0	0	0	0	0	0	0	0	0	0	0	0	0	0
11:15 AM	0	0	0	0	0	1	0	0	0	1	0	1	0	0	1	0	0	0	0	0	2
11:30 AM	0	0	0	0	0	0	0	0	0	0	1	0	0	0	1	0	0	0	0	0	1
11:45 AM	0	0	0	0	0	0	0	0	0	0	0	0	0	0	0	0	0	0	0	0	0
Total	0	0	0	0	0	1	0	0	0	1	1	1	0	0	2	0	0	0	0	0	3
12:00 PM	0	0	0	0	0	0	0	0	0	0	0	0	0	0	0	0	0	0	0	0	0
12:15 PM	0	0	0	0	0	0	0	0	0	0	0	0	0	0	0	0	0	0	0	0	0
12:30 PM	0	0	0	0	0	0	0	0	0	0	0	0	0	0	0	0	0	0	0	0	0
12:45 PM	0	0	0	0	0	0	0	0	0	0	0	0	0	0	0	0	0	0	0	0	0
Total	0	0	0	0	0	0	0	0	0	0	0	0	0	0	0	0	0	0	0	0	0
01:00 PM	0	0	0	0	0	0	0	0	0	0	0	1	0	0	1	0	0	0	0	0	1
01:15 PM	0	0	0	0	0	0	0	0	0	0	0	0	0	0	0	0	0	0	0	0	0
01:30 PM	0	1	0	0	1	1	0	0	0	1	0	0	0	0	0	0	0	0	0	0	2
01:45 PM	0	0	0	0	0	0	0	0	0	0	0	1	0	0	1	0	0	0	0	0	1
Total	0	1	0	0	1	1	0	0	0	1	0	2	0	0	2	0	0	0	0	0	4
02:00 PM	0	0	0	0	0	0	0	0	0	0	0	0	0	0	0	0	0	0	0	0	0
02:15 PM	0	0	0	0	0	0	0	0	0	0	0	0	0	0	0	0	0	0	0	0	0
02:30 PM	0	0	0	0	0	0	0	0	0	0	0	0	0	0	0	0	0	0	0	0	0
02:45 PM	0	0	0	0	0	0	0	0	0	0	0	0	0	0	0	0	0	0	0	0	0
Total	0	0	0	0	0	0	0	0	0	0	0	0	0	0	0	0	0	0	0	0	0
03:00 PM	0	3	0	0	3	0	0	0	0	0	1	0	0	0	1	0	0	3	0	3	7
03:15 PM	0	2	0	0	2	0	0	0	0	0	0	2	0	0	2	0	2	0	0	2	6
03:30 PM	0	0	1	0	1	0	0	0	0	0	0	1	0	0	1	0	0	0	0	0	2
03:45 PM	0	2	4	0	6	0	0	0	0	0	0	0	0	0	0	0	0	0	0	0	6
Total	0	7	5	0	12	0	0	0	0	0	1	3	0	0	4	0	2	3	0	5	21
04:00 PM	0	0	0	0	0	0	0	0	0	0	0	0	0	0	0	1	0	0	0	1	1
04:15 PM	0	0	0	0	0	0	0	0	0	0	0	1	0	0	1	0	0	0	0	0	1

Traffic Data Service

San Jose, CA
(408) 622-4787
tdsbay@cs.com

File Name : 5 FINAL
Site Code : 00000005
Start Date : 3/12/2019
Page No : 2

Groups Printed- Bikes

	CAMPBELL AVE Southbound					ARBOLEDA DR Westbound					CAMPBELL AVE Northbound					ARBOLEDA DR Eastbound					
Start Time	Right	Thru	Left	Peds	App. Total	Right	Thru	Left	Peds	App. Total	Right	Thru	Left	Peds	App. Total	Right	Thru	Left	Peds	App. Total	Int. Total
04:30 PM	0	0	0	0	0	0	0	0	0	0	0	0	0	0	0	0	0	0	0	0	0
04:45 PM	0	0	0	0	0	0	0	0	0	0	0	0	0	0	0	0	0	0	0	0	0
Total	0	0	0	0	0	0	0	0	0	0	0	1	0	0	1	1	0	0	0	1	2
05:00 PM	0	0	0	0	0	0	0	0	0	0	0	0	0	0	0	0	0	0	0	0	0
05:15 PM	0	0	0	0	0	0	0	0	0	0	0	0	0	0	0	0	0	0	0	0	0
05:30 PM	0	0	0	0	0	0	0	0	0	0	0	0	0	0	0	0	0	0	0	0	0
05:45 PM	0	0	1	0	1	0	0	0	0	0	0	0	0	0	0	0	0	0	0	0	1
Total	0	0	1	0	1	0	0	0	0	0	0	0	0	0	0	0	0	0	0	0	1
06:00 PM	0	1	0	0	1	0	0	0	0	0	0	0	0	0	0	0	0	0	0	0	1
06:15 PM	0	0	0	0	0	0	0	0	0	0	0	2	0	0	2	0	0	0	0	0	2
06:30 PM	0	0	1	0	1	0	0	0	0	0	0	0	0	0	0	0	0	0	0	0	1
06:45 PM	0	1	0	0	1	0	0	0	0	0	0	0	0	0	0	0	0	0	0	0	1
Total	0	2	1	0	3	0	0	0	0	0	0	2	0	0	2	0	0	0	0	0	5
Grand Total	1	16	8	0	25	9	2	1	0	12	2	20	0	0	22	2	3	3	0	8	67
Apprch %	4	64	32	0		75	16.7	8.3	0		9.1	90.9	0	0		25	37.5	37.5	0		
Total %	1.5	23.9	11.9	0	37.3	13.4	3	1.5	0	17.9	3	29.9	0	0	32.8	3	4.5	4.5	0	11.9	

	CAMPBELL AVE Southbound				ARBOLEDA DR Westbound				CAMPBELL AVE Northbound				ARBOLEDA DR Eastbound				
Start Time	Right	Thru	Left	App. Total	Right	Thru	Left	App. Total	Right	Thru	Left	App. Total	Right	Thru	Left	App. Total	Int. Total
Peak Hour Analysis From 07:00 AM to 10:45 AM - Peak 1 of 1																	
Peak Hour for Entire Intersection Begins at 07:30 AM																	
07:30 AM	0	1	0	1	0	**2**	0	2	0	**5**	0	**5**	0	0	0	0	**8**
07:45 AM	0	0	0	0	**4**	0	0	**4**	0	2	0	2	0	0	0	0	6
08:00 AM	0	**3**	0	**3**	1	0	0	1	0	1	0	1	0	0	0	0	5
08:15 AM	**1**	1	0	2	0	0	**1**	1	0	0	0	0	0	0	0	0	3
Total Volume	1	5	0	6	5	2	1	8	0	8	0	8	0	0	0	0	22
% App. Total	16.7	83.3	0		62.5	25	12.5		0	100	0		0	0	0		
PHF	.250	.417	.000	.500	.313	.250	.250	.500	.000	.400	.000	.400	.000	.000	.000	.000	.688

Traffic Data Service

San Jose, CA
(408) 622-4787
tdsbay@cs.com

File Name : 5 FINAL
Site Code : 00000005
Start Date : 3/12/2019
Page No : 3

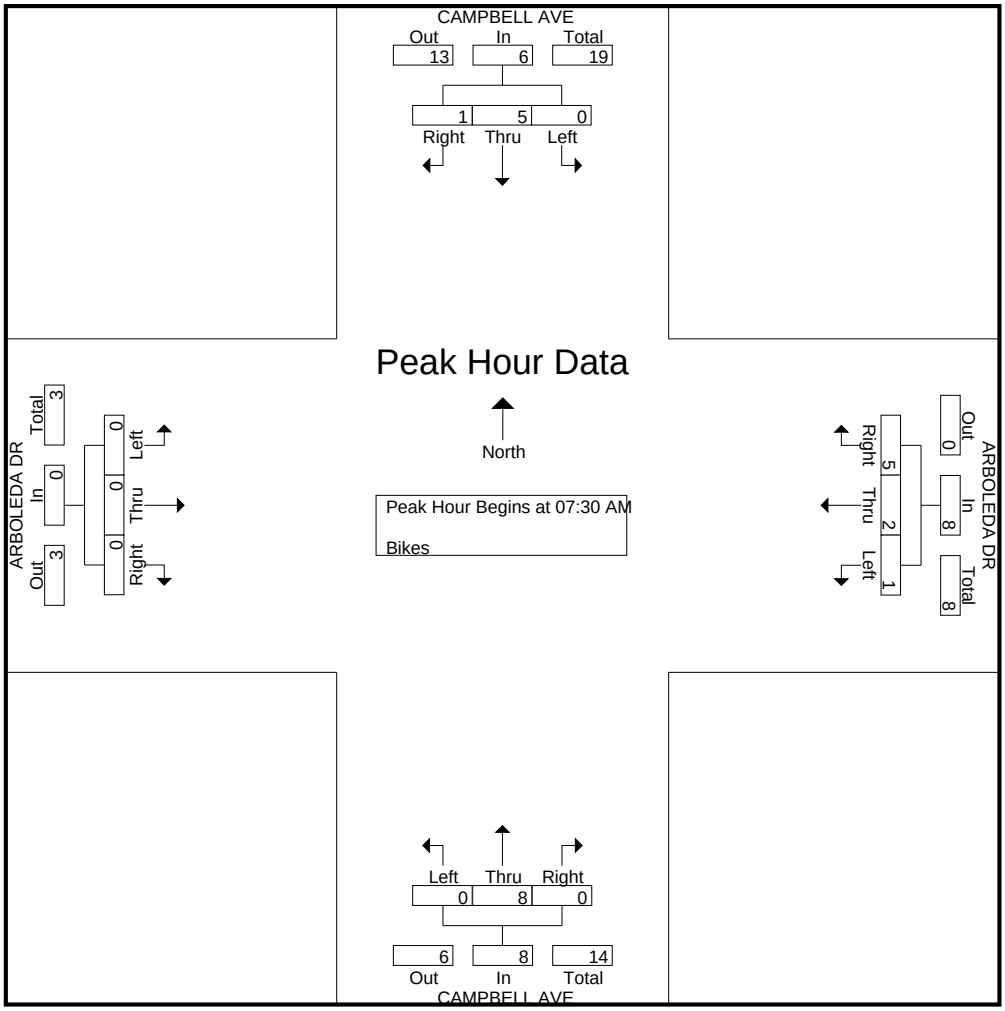

Peak Hour Analysis From 11:00 AM to 02:45 PM - Peak 1 of 1
Peak Hour for Entire Intersection Begins at 01:00 PM

01:00 PM	0	0	0	0	0	0	0	0	0	**1**	0	**1**	0	0	0	0	1
01:15 PM	0	0	0	0	0	0	0	0	0	0	0	0	0	0	0	0	0
01:30 PM	0	**1**	0	**1**	**1**	0	0	**1**	0	0	0	0	0	0	0	0	**2**
01:45 PM	0	0	0	0	0	0	0	0	0	1	0	1	0	0	0	0	1
Total Volume	0	1	0	1	1	0	0	1	0	2	0	2	0	0	0	0	4
% App. Total	0	100	0		100	0	0		0	100	0		0	0	0		
PHF	.000	.250	.000	.250	.250	.000	.000	.250	.000	.500	.000	.500	.000	.000	.000	.000	.500

Traffic Data Service

San Jose, CA
(408) 622-4787
tdsbay@cs.com

File Name : 5 FINAL
Site Code : 00000005
Start Date : 3/12/2019
Page No : 4

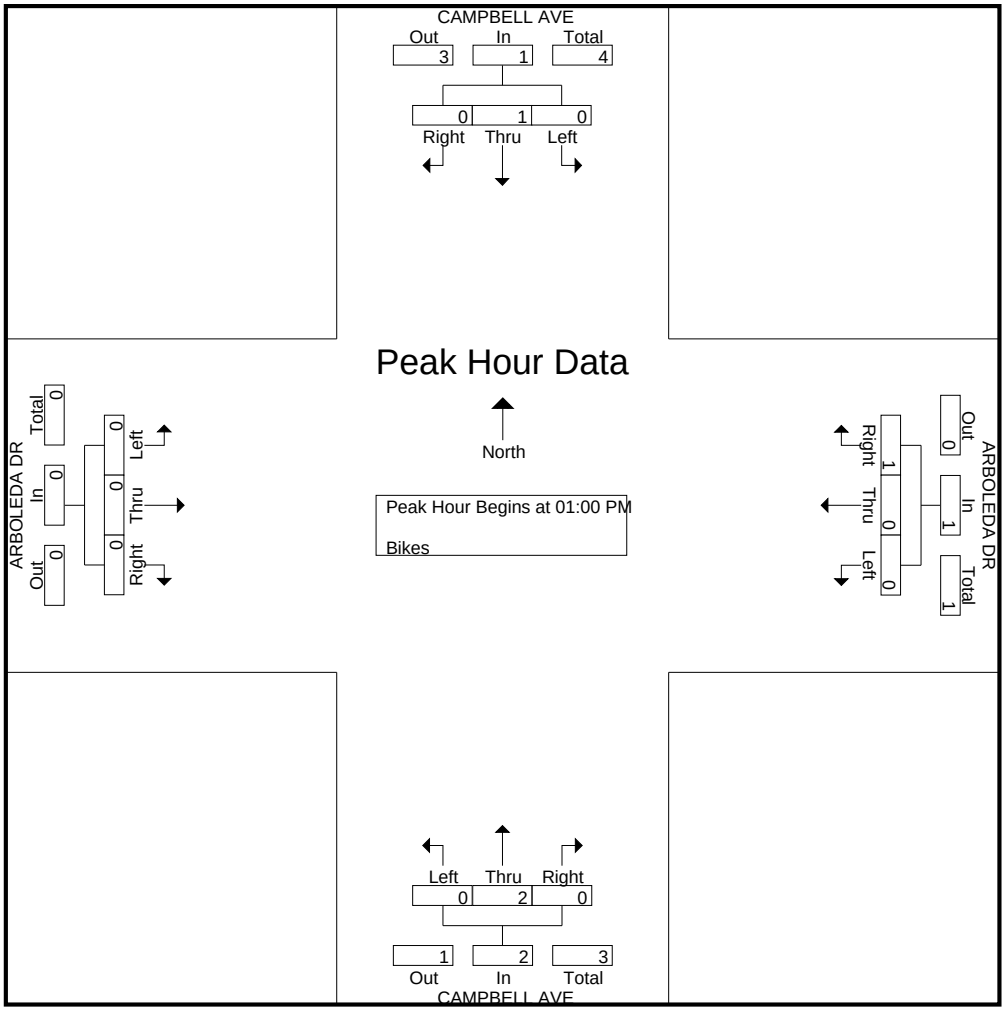

Peak Hour Analysis From 03:00 PM to 06:45 PM - Peak 1 of 1
Peak Hour for Entire Intersection Begins at 03:00 PM

03:00 PM	0	**3**	0	3	0	0	0	0	**1**	0	0	1	0	0	**3**	**3**	**7**
03:15 PM	0	2	0	2	0	0	0	0	0	**2**	0	**2**	0	**2**	0	2	6
03:30 PM	0	0	1	1	0	0	0	0	0	1	0	1	0	0	0	0	2
03:45 PM	0	2	**4**	**6**	0	0	0	0	0	0	0	0	0	0	0	0	6
Total Volume	0	7	5	12	0	0	0	0	1	3	0	4	0	2	3	5	21
% App. Total	0	58.3	41.7		0	0	0		25	75	0		0	40	60		
PHF	.000	.583	.313	.500	.000	.000	.000	.000	.250	.375	.000	.500	.000	.250	.250	.417	.750

Traffic Data Service

San Jose, CA
(408) 622-4787
tdsbay@cs.com

File Name : 5 FINAL
Site Code : 00000005
Start Date : 3/12/2019
Page No : 5

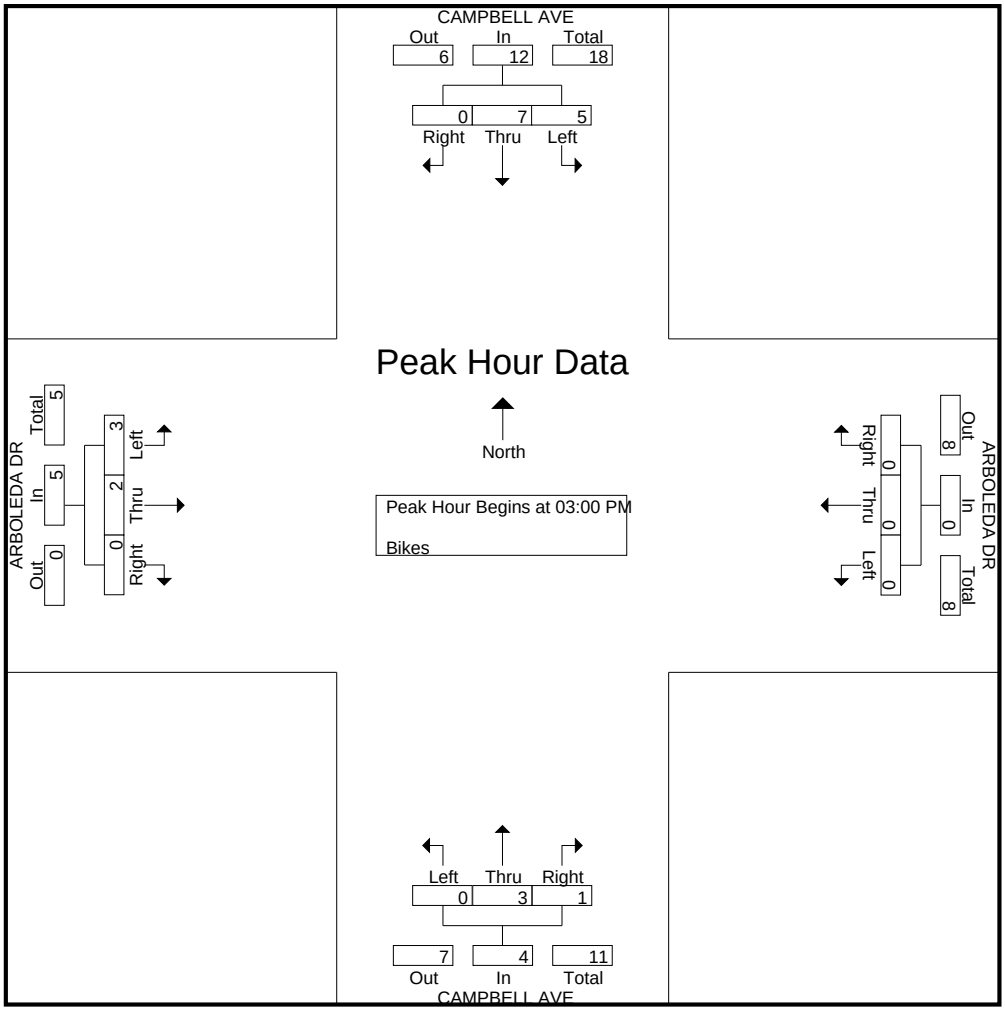

Peak Hour Analysis From 07:00 AM to 06:45 PM - Peak 1 of 1
Peak Hour for Entire Intersection Begins at 07:30 AM

07:30 AM	0	1	0	1	0	**2**	0	2	0	**5**	0	**5**	0	0	0	0	**8**
07:45 AM	0	0	0	0	**4**	0	0	**4**	0	2	0	2	0	0	0	0	6
08:00 AM	0	**3**	0	**3**	1	0	0	1	0	1	0	1	0	0	0	0	5
08:15 AM	**1**	1	0	2	0	0	**1**	1	0	0	0	0	0	0	0	0	3
Total Volume	1	5	0	6	5	2	1	8	0	8	0	8	0	0	0	0	22
% App. Total	16.7	83.3	0		62.5	25	12.5		0	100	0		0	0	0		
PHF	.250	.417	.000	.500	.313	.250	.250	.500	.000	.400	.000	.400	.000	.000	.000	.000	.688

Traffic Data Service

San Jose, CA
(408) 622-4787
tdsbay@cs.com

File Name : 5 FINAL
Site Code : 00000005
Start Date : 3/12/2019
Page No : 6

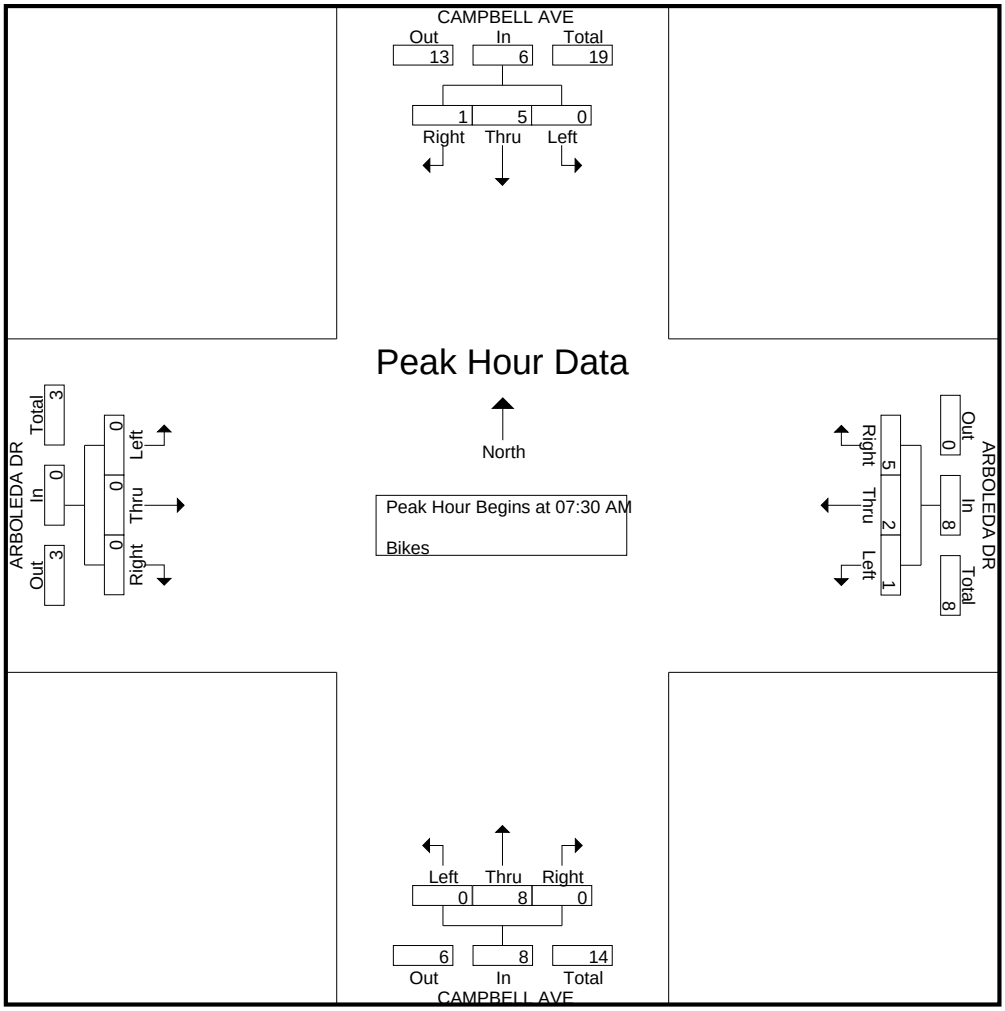

Traffic Data Service

San Jose, CA
(408) 622-4787
tdsbay@cs.com

File Name : 6 FINAL
Site Code : 00000006
Start Date : 3/12/2019
Page No : 1

Groups Printed- Vehicles

	CAMPBELL AVE Southbound					ROSITA AVE Westbound					CAMPBELL AVE Northbound					ROSITA AVE Eastbound					
Start Time	Right	Thru	Left	Peds	App. Total	Right	Thru	Left	Peds	App. Total	Right	Thru	Left	Peds	App. Total	Right	Thru	Left	Peds	App. Total	Int. Total
07:00 AM	1	6	1	2	10	3	0	0	0	3	0	4	2	0	6	0	1	1	1	3	22
07:15 AM	0	5	2	0	7	2	2	3	0	7	0	3	1	0	4	0	0	1	0	1	19
07:30 AM	2	15	2	2	21	4	3	1	0	8	1	11	4	0	16	1	1	4	3	9	54
07:45 AM	4	23	1	1	29	6	3	1	0	10	0	29	5	0	34	1	0	5	1	7	80
Total	7	49	6	5	67	15	8	5	0	28	1	47	12	0	60	2	2	11	5	20	175
08:00 AM	13	47	4	4	68	2	4	0	0	6	0	29	6	1	36	1	2	4	3	10	120
08:15 AM	33	58	1	13	105	8	6	3	1	18	2	26	6	0	34	8	3	17	8	36	193
08:30 AM	9	17	4	3	33	6	4	2	0	12	1	28	5	0	34	5	2	22	1	30	109
08:45 AM	6	10	0	1	17	4	6	3	0	13	0	14	3	0	17	2	2	7	0	11	58
Total	61	132	9	21	223	20	20	8	1	49	3	97	20	1	121	16	9	50	12	87	480
09:00 AM	8	4	1	0	13	3	0	0	0	3	2	10	0	0	12	1	2	9	0	12	40
09:15 AM	1	3	1	1	6	5	1	1	0	7	1	10	2	0	13	4	0	3	0	7	33
09:30 AM	3	12	2	2	19	4	0	1	2	7	2	5	7	0	14	0	3	4	4	11	51
09:45 AM	0	7	2	0	9	3	0	1	2	6	2	9	1	0	12	1	0	3	0	4	31
Total	12	26	6	3	47	15	1	3	4	23	7	34	10	0	51	6	5	19	4	34	155
10:00 AM	1	6	1	1	9	2	1	0	0	3	1	12	0	0	13	1	2	3	0	6	31
10:15 AM	2	6	0	1	9	3	2	0	0	5	2	14	0	0	16	2	1	4	0	7	37
10:30 AM	0	8	0	0	8	1	1	1	0	3	0	4	0	0	4	1	1	2	2	6	21
10:45 AM	2	5	1	0	8	4	2	1	0	7	0	12	1	0	13	0	1	2	1	4	32
Total	5	25	2	2	34	10	6	2	0	18	3	42	1	0	46	4	5	11	3	23	121
11:00 AM	4	7	2	1	14	4	3	0	0	7	0	5	2	0	7	1	0	3	3	7	35
11:15 AM	3	13	1	0	17	3	3	0	0	6	0	6	2	0	8	1	1	8	3	13	44
11:30 AM	2	7	1	4	14	2	2	1	0	5	2	6	0	0	8	3	0	3	2	8	35
11:45 AM	5	13	4	0	22	1	0	1	0	2	1	8	2	0	11	2	4	0	1	7	42
Total	14	40	8	5	67	10	8	2	0	20	3	25	6	0	34	7	5	14	9	35	156
12:00 PM	5	6	2	2	15	1	3	1	0	5	1	9	2	0	12	2	3	7	0	12	44
12:15 PM	2	6	2	3	13	2	3	0	0	5	0	8	3	0	11	1	1	2	0	4	33
12:30 PM	3	7	2	0	12	2	0	0	0	2	1	6	2	0	9	2	3	3	0	8	31
12:45 PM	2	6	2	1	11	2	1	0	0	3	0	7	1	0	8	0	0	4	1	5	27
Total	12	25	8	6	51	7	7	1	0	15	2	30	8	0	40	5	7	16	1	29	135
01:00 PM	0	6	0	1	7	1	2	1	0	4	0	9	4	2	15	1	2	3	0	6	32
01:15 PM	0	7	0	2	9	3	0	0	0	3	1	2	2	0	5	1	2	0	2	5	22
01:30 PM	3	7	1	3	14	1	5	1	1	8	1	9	1	0	11	3	1	3	0	7	40
01:45 PM	2	8	2	2	14	3	0	2	0	5	1	9	1	0	11	0	0	2	0	2	32
Total	5	28	3	8	44	8	7	4	1	20	3	29	8	2	42	5	5	8	2	20	126
02:00 PM	2	10	1	2	15	0	2	1	0	3	2	10	3	1	16	1	1	2	0	4	38
02:15 PM	4	14	0	4	22	1	1	3	0	5	0	6	3	0	9	2	2	0	0	4	40
02:30 PM	7	9	6	4	26	2	4	0	0	6	1	10	6	0	17	2	0	4	1	7	56
02:45 PM	17	37	5	1	60	4	3	1	0	8	1	10	2	0	13	1	0	7	1	9	90
Total	30	70	12	11	123	7	10	5	0	22	4	36	14	1	55	6	3	13	2	24	224
03:00 PM	9	25	4	10	48	3	0	0	0	3	0	12	3	0	15	12	2	25	1	40	106
03:15 PM	7	22	2	6	37	4	4	3	0	11	4	19	2	0	25	5	3	4	0	12	85
03:30 PM	0	21	4	2	27	4	0	1	0	5	1	14	3	0	18	0	2	4	1	7	57
03:45 PM	7	15	3	1	26	3	2	1	0	6	0	12	0	0	12	4	2	3	0	9	53
Total	23	83	13	19	138	14	6	5	0	25	5	57	8	0	70	21	9	36	2	68	301
04:00 PM	1	25	4	2	32	3	1	1	0	5	1	5	5	2	13	3	3	5	3	14	64
04:15 PM	3	20	1	2	26	4	0	1	0	5	0	15	1	1	17	3	2	3	0	8	56

Traffic Data Service

San Jose, CA
(408) 622-4787
tdsbay@cs.com

File Name : 6 FINAL
Site Code : 00000006
Start Date : 3/12/2019
Page No : 2

Groups Printed- Vehicles

	CAMPBELL AVE Southbound					ROSITA AVE Westbound					CAMPBELL AVE Northbound					ROSITA AVE Eastbound					
Start Time	Right	Thru	Left	Peds	App. Total	Right	Thru	Left	Peds	App. Total	Right	Thru	Left	Peds	App. Total	Right	Thru	Left	Peds	App. Total	Int. Total
04:30 PM	2	22	3	6	33	0	1	0	0	1	0	14	0	0	14	3	4	2	0	9	57
04:45 PM	7	23	3	4	37	1	1	0	1	3	4	14	3	0	21	5	3	4	1	13	74
Total	13	90	11	14	128	8	3	2	1	14	5	48	9	3	65	14	12	14	4	44	251
05:00 PM	10	26	5	3	44	2	6	0	0	8	0	12	1	1	14	4	5	8	0	17	83
05:15 PM	13	30	0	2	45	1	2	5	0	8	1	4	3	1	9	8	3	7	0	18	80
05:30 PM	2	30	5	2	39	2	3	1	0	6	2	10	3	0	15	4	6	4	0	14	74
05:45 PM	2	31	4	0	37	3	4	1	1	9	0	10	1	0	11	1	4	4	0	9	66
Total	27	117	14	7	165	8	15	7	1	31	3	36	8	2	49	17	18	23	0	58	303
06:00 PM	1	15	3	0	19	1	0	4	0	5	2	7	0	0	9	2	1	1	0	4	37
06:15 PM	1	22	3	2	28	1	0	0	0	1	0	9	1	1	11	1	2	1	0	4	44
06:30 PM	1	18	3	6	28	1	0	0	0	1	0	12	0	0	12	0	1	2	0	3	44
06:45 PM	1	15	2	1	19	3	0	2	0	5	0	6	0	0	6	0	1	1	0	2	32
Total	4	70	11	9	94	6	0	6	0	12	2	34	1	1	38	3	5	5	0	13	157
Grand Total	213	755	103	110	1181	128	91	50	8	277	41	515	105	10	671	106	85	220	44	455	2584
Apprch %	18	63.9	8.7	9.3		46.2	32.9	18.1	2.9		6.1	76.8	15.6	1.5		23.3	18.7	48.4	9.7		
Total %	8.2	29.2	4	4.3	45.7	5	3.5	1.9	0.3	10.7	1.6	19.9	4.1	0.4	26	4.1	3.3	8.5	1.7	17.6	

	CAMPBELL AVE Southbound				ROSITA AVE Westbound				CAMPBELL AVE Northbound				ROSITA AVE Eastbound				
Start Time	Right	Thru	Left	App. Total	Right	Thru	Left	App. Total	Right	Thru	Left	App. Total	Right	Thru	Left	App. Total	Int. Total
Peak Hour Analysis From 07:00 AM to 10:45 AM - Peak 1 of 1																	
Peak Hour for Entire Intersection Begins at 07:45 AM																	
07:45 AM	4	23	1	28	6	3	1	10	0	**29**	5	34	1	0	5	6	78
08:00 AM	13	47	**4**	64	2	4	0	6	0	29	**6**	**35**	1	2	4	7	112
08:15 AM	**33**	**58**	1	**92**	**8**	**6**	**3**	**17**	**2**	26	6	34	**8**	**3**	17	28	**171**
08:30 AM	9	17	4	30	6	4	2	12	1	28	5	34	5	2	**22**	**29**	105
Total Volume	59	145	10	214	22	17	6	45	3	112	22	137	15	7	48	70	466
% App. Total	27.6	67.8	4.7		48.9	37.8	13.3		2.2	81.8	16.1		21.4	10	68.6		
PHF	.447	.625	.625	.582	.688	.708	.500	.662	.375	.966	.917	.979	.469	.583	.545	.603	.681

Traffic Data Service

San Jose, CA
(408) 622-4787
tdsbay@cs.com

File Name : 6 FINAL
Site Code : 00000006
Start Date : 3/12/2019
Page No : 3

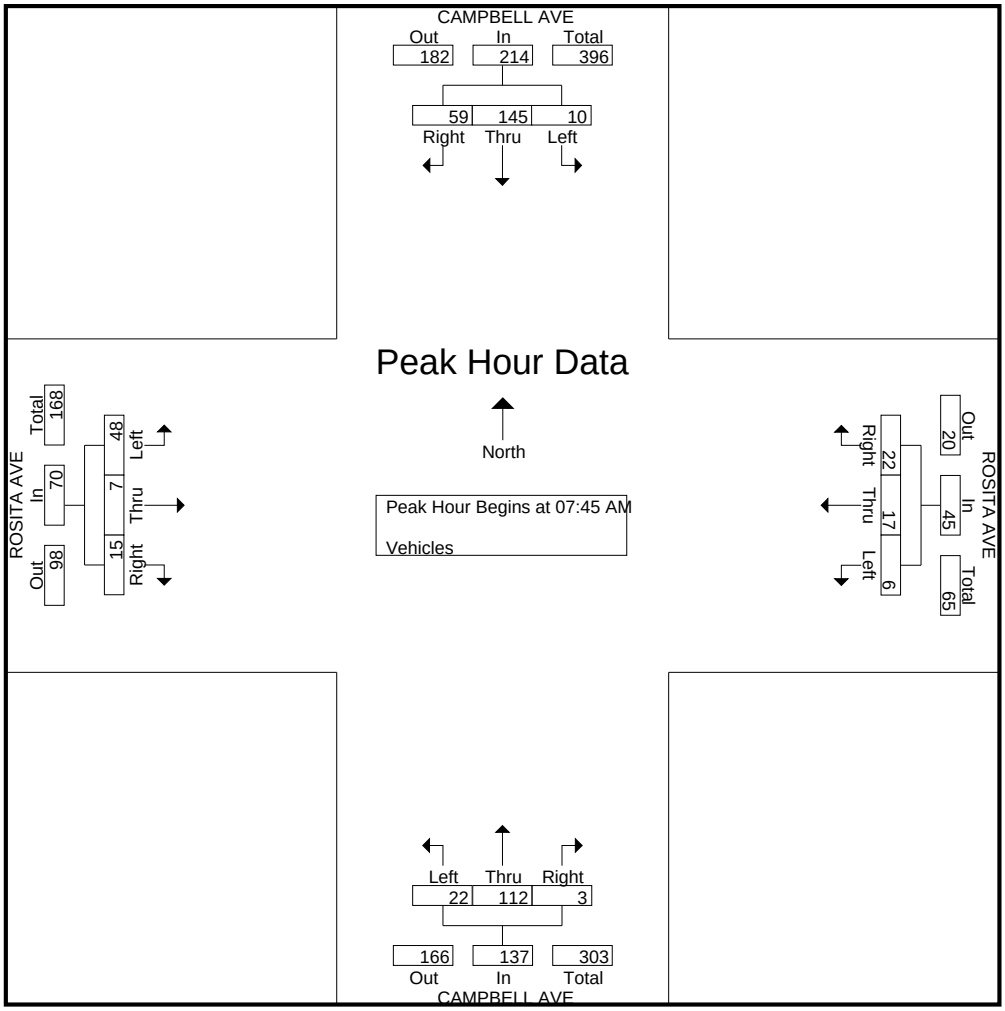

Peak Hour Analysis From 11:00 AM to 02:45 PM - Peak 1 of 1
Peak Hour for Entire Intersection Begins at 02:00 PM

02:00 PM	2	10	1	13	0	2	1	3	**2**	**10**	3	15	1	1	2	4	35
02:15 PM	4	14	0	18	1	1	**3**	5	0	6	3	9	**2**	**2**	0	4	36
02:30 PM	7	9	**6**	22	2	**4**	0	6	1	10	**6**	**17**	2	0	4	6	51
02:45 PM	**17**	**37**	5	**59**	**4**	3	1	**8**	1	10	2	13	1	0	**7**	**8**	**88**
Total Volume	30	70	12	112	7	10	5	22	4	36	14	54	6	3	13	22	210
% App. Total	26.8	62.5	10.7		31.8	45.5	22.7		7.4	66.7	25.9		27.3	13.6	59.1		
PHF	.441	.473	.500	.475	.438	.625	.417	.688	.500	.900	.583	.794	.750	.375	.464	.688	.597

Traffic Data Service

San Jose, CA
(408) 622-4787
tdsbay@cs.com

File Name : 6 FINAL
Site Code : 00000006
Start Date : 3/12/2019
Page No : 4

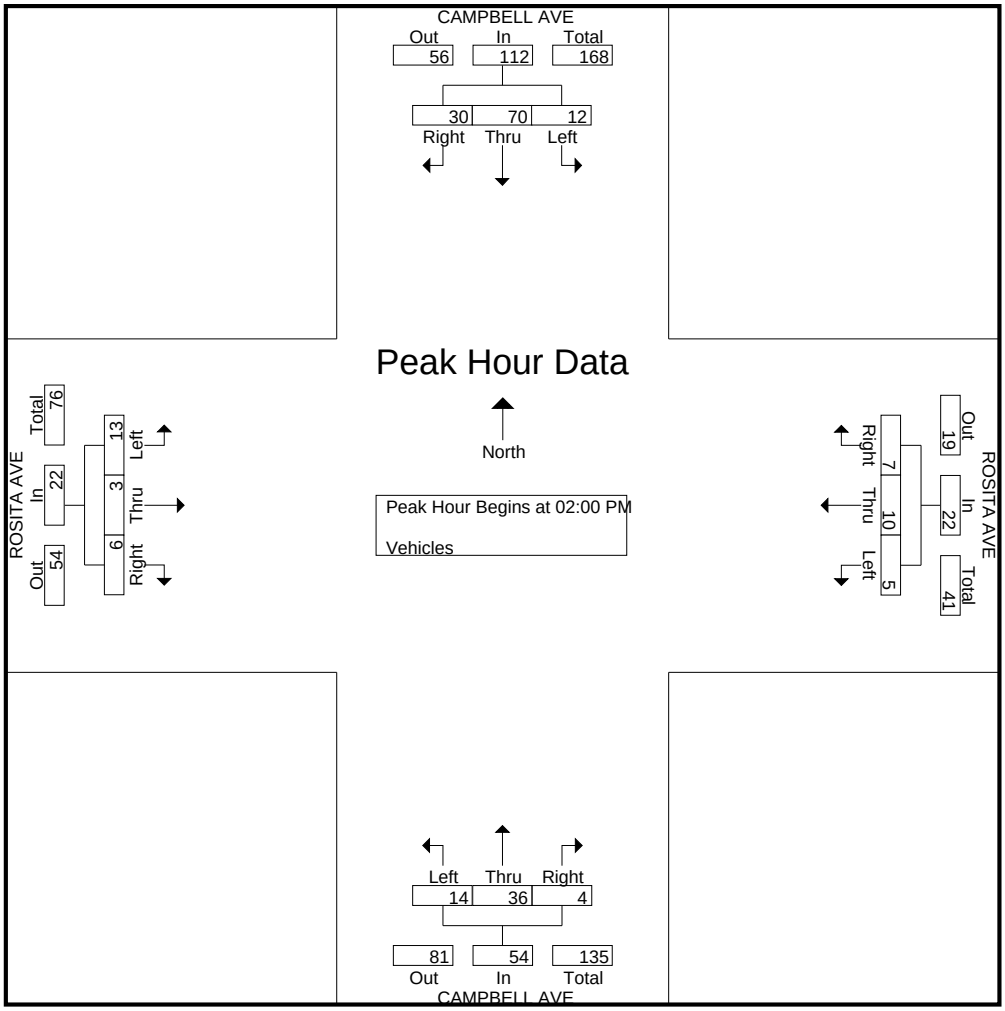

Peak Hour Analysis From 03:00 PM to 06:45 PM - Peak 1 of 1
Peak Hour for Entire Intersection Begins at 04:45 PM

04:45 PM	7	23	3	33	1	1	0	2	**4**	**14**	**3**	**21**	5	3	4	12	68
05:00 PM	10	26	**5**	41	**2**	**6**	0	**8**	0	12	1	13	4	5	**8**	17	**79**
05:15 PM	**13**	**30**	0	**43**	1	2	**5**	8	1	4	3	8	**8**	3	7	**18**	77
05:30 PM	2	30	5	37	2	3	1	6	2	10	3	15	4	**6**	4	14	72
Total Volume	32	109	13	154	6	12	6	24	7	40	10	57	21	17	23	61	296
% App. Total	20.8	70.8	8.4		25	50	25		12.3	70.2	17.5		34.4	27.9	37.7		
PHF	.615	.908	.650	.895	.750	.500	.300	.750	.438	.714	.833	.679	.656	.708	.719	.847	.937

Traffic Data Service

San Jose, CA
(408) 622-4787
tdsbay@cs.com

File Name : 6 FINAL
Site Code : 00000006
Start Date : 3/12/2019
Page No : 5

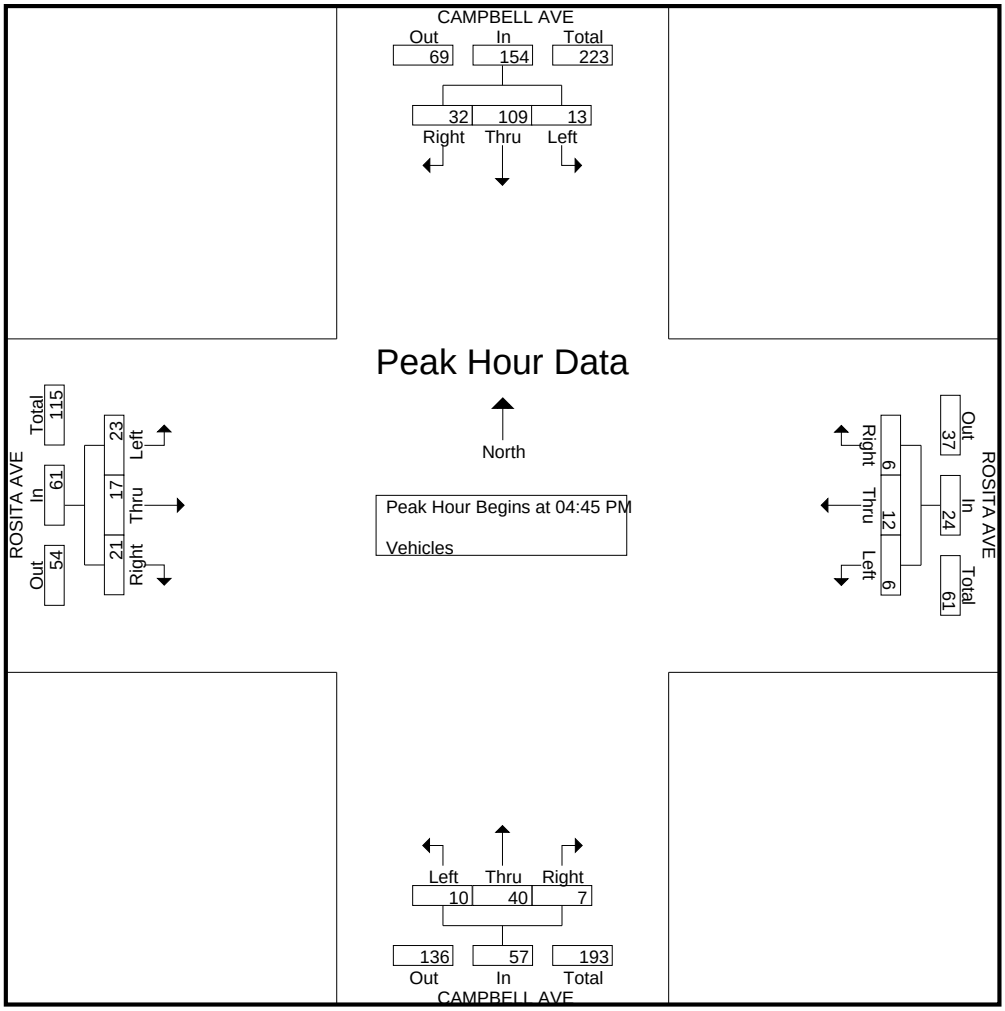

Peak Hour Analysis From 07:00 AM to 06:45 PM - Peak 1 of 1
Peak Hour for Entire Intersection Begins at 07:45 AM

07:45 AM	4	23	1	28	6	3	1	10	0	**29**	5	34	1	0	5	6	78
08:00 AM	13	47	**4**	64	2	4	0	6	0	29	**6**	**35**	1	2	4	7	112
08:15 AM	**33**	**58**	1	**92**	**8**	**6**	**3**	**17**	**2**	26	6	34	**8**	**3**	17	28	**171**
08:30 AM	9	17	4	30	6	4	2	12	1	28	5	34	5	2	**22**	**29**	105
Total Volume	59	145	10	214	22	17	6	45	3	112	22	137	15	7	48	70	466
% App. Total	27.6	67.8	4.7		48.9	37.8	13.3		2.2	81.8	16.1		21.4	10	68.6		
PHF	.447	.625	.625	.582	.688	.708	.500	.662	.375	.966	.917	.979	.469	.583	.545	.603	.681

Traffic Data Service

San Jose, CA
(408) 622-4787
tdsbay@cs.com

File Name : 6 FINAL
Site Code : 00000006
Start Date : 3/12/2019
Page No : 6

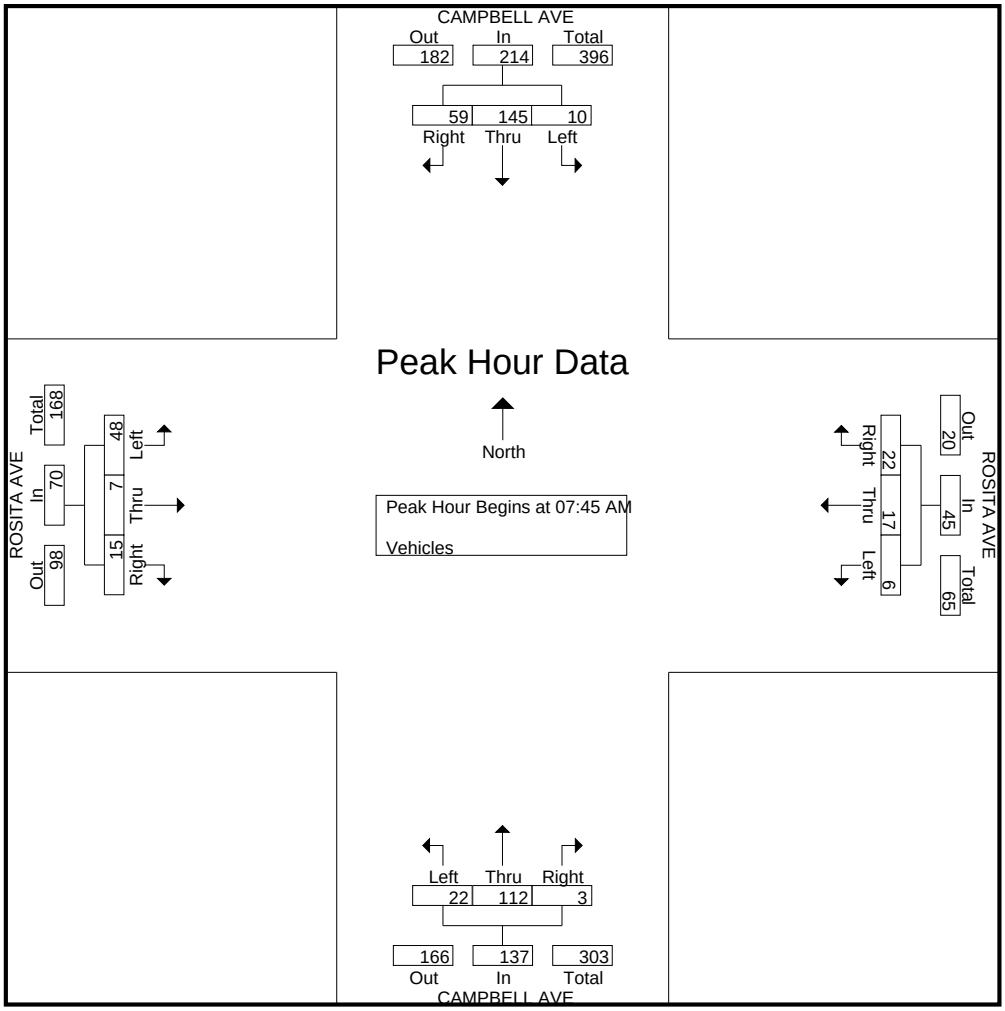

Traffic Data Service

San Jose, CA
(408) 622-4787
tdsbay@cs.com

File Name : 6 FINAL
Site Code : 00000006
Start Date : 3/12/2019
Page No : 1

Groups Printed- Bikes

	CAMPBELL AVE Southbound					ROSITA AVE Westbound					CAMPBELL AVE Northbound					ROSITA AVE Eastbound					
Start Time	Right	Thru	Left	Peds	App. Total	Right	Thru	Left	Peds	App. Total	Right	Thru	Left	Peds	App. Total	Right	Thru	Left	Peds	App. Total	Int. Total
07:00 AM	0	0	0	0	0	0	0	0	0	0	0	0	0	0	0	0	0	0	0	0	0
07:15 AM	0	0	0	0	0	0	0	0	0	0	0	0	0	0	0	0	0	1	0	1	1
07:30 AM	0	1	0	0	1	1	0	0	0	1	0	4	0	0	4	0	0	0	0	0	6
07:45 AM	0	0	0	0	0	0	0	0	0	0	0	2	0	0	2	0	0	0	0	0	2
Total	0	1	0	0	1	1	0	0	0	1	0	6	0	0	6	0	0	1	0	1	9
08:00 AM	1	1	0	0	2	0	0	0	0	0	0	1	0	0	1	0	0	0	0	0	3
08:15 AM	0	0	0	0	0	0	0	0	0	0	0	0	0	0	0	1	0	0	0	1	1
08:30 AM	1	0	0	0	1	1	1	0	0	2	0	0	1	0	1	0	1	0	0	1	5
08:45 AM	0	0	0	0	0	0	1	0	0	1	0	0	0	0	0	0	0	0	0	0	1
Total	2	1	0	0	3	1	2	0	0	3	0	1	1	0	2	1	1	0	0	2	10
09:00 AM	0	0	0	0	0	0	0	0	0	0	0	0	0	0	0	0	0	0	0	0	0
09:15 AM	0	0	0	0	0	1	0	0	0	1	0	0	0	0	0	0	0	0	0	0	1
09:30 AM	0	0	0	0	0	0	0	0	0	0	0	0	0	0	0	0	0	2	0	2	2
09:45 AM	0	1	0	0	1	0	0	0	0	0	0	0	0	0	0	0	0	0	0	0	1
Total	0	1	0	0	1	1	0	0	0	1	0	0	0	0	0	0	0	2	0	2	4
10:00 AM	0	1	0	0	1	0	0	0	0	0	0	0	0	0	0	0	0	0	0	0	1
10:15 AM	0	0	0	0	0	0	0	0	0	0	0	0	0	0	0	0	0	0	0	0	0
10:30 AM	0	0	0	0	0	0	1	0	0	1	0	0	0	0	0	0	0	0	0	0	1
10:45 AM	0	0	0	0	0	0	1	0	0	1	0	0	0	0	0	0	0	0	0	0	1
Total	0	1	0	0	1	0	2	0	0	2	0	0	0	0	0	0	0	0	0	0	3
11:00 AM	0	0	0	0	0	0	1	0	0	1	0	0	0	0	0	0	0	0	0	0	1
11:15 AM	0	0	0	0	0	0	0	0	0	0	0	1	0	0	1	0	0	0	0	0	1
11:30 AM	0	0	0	0	0	0	0	0	0	0	0	0	0	0	0	0	0	1	0	1	1
11:45 AM	0	0	0	0	0	0	0	0	0	0	0	0	0	0	0	0	0	0	0	0	0
Total	0	0	0	0	0	0	1	0	0	1	0	1	0	0	1	0	0	1	0	1	3
12:00 PM	0	0	0	0	0	0	0	0	0	0	0	0	0	0	0	0	0	0	0	0	0
12:15 PM	0	0	0	0	0	0	0	0	0	0	0	0	0	0	0	0	0	0	0	0	0
12:30 PM	0	0	0	0	0	0	0	0	0	0	0	0	0	0	0	0	0	0	0	0	0
12:45 PM	0	0	0	0	0	0	0	0	0	0	0	0	0	0	0	0	0	0	0	0	0
Total	0	0	0	0	0	0	0	0	0	0	0	0	0	0	0	0	0	0	0	0	0
01:00 PM	0	0	0	0	0	0	0	0	0	0	0	0	0	0	0	0	0	1	0	1	1
01:15 PM	0	0	0	0	0	0	1	0	0	1	0	0	0	0	0	0	0	0	0	0	1
01:30 PM	0	1	0	0	1	0	0	0	0	0	0	0	0	0	0	0	0	0	0	0	1
01:45 PM	0	0	0	0	0	0	0	0	0	0	0	1	0	0	1	0	0	0	0	0	1
Total	0	1	0	0	1	0	1	0	0	1	0	1	0	0	1	0	0	1	0	1	4
02:00 PM	0	0	0	0	0	0	0	0	0	0	0	0	0	0	0	0	0	0	0	0	0
02:15 PM	0	0	0	0	0	0	0	0	0	0	0	0	0	0	0	0	0	0	0	0	0
02:30 PM	0	0	0	0	0	0	0	0	0	0	0	0	0	0	0	0	0	0	0	0	0
02:45 PM	0	0	0	0	0	0	0	0	0	0	0	0	0	0	0	0	0	0	0	0	0
Total	0	0	0	0	0	0	0	0	0	0	0	0	0	0	0	0	0	0	0	0	0
03:00 PM	0	1	0	0	1	0	0	0	0	0	0	0	0	0	0	0	1	0	0	1	2
03:15 PM	0	1	1	0	2	0	0	0	0	0	0	1	0	0	1	0	0	0	0	0	3
03:30 PM	0	0	0	0	0	0	0	0	0	0	1	1	0	0	2	0	0	0	0	0	2
03:45 PM	0	2	0	0	2	0	0	0	0	0	0	0	0	0	0	0	1	0	0	1	3
Total	0	4	1	0	5	0	0	0	0	0	1	2	0	0	3	0	2	0	0	2	10
04:00 PM	0	1	0	0	1	0	0	0	0	0	0	0	0	0	0	0	0	1	0	1	2
04:15 PM	0	0	0	0	0	0	0	0	0	0	0	0	0	0	0	0	0	0	0	0	0

Traffic Data Service

San Jose, CA
(408) 622-4787
tdsbay@cs.com

File Name : 6 FINAL
Site Code : 00000006
Start Date : 3/12/2019
Page No : 2

Groups Printed- Bikes

	CAMPBELL AVE Southbound					ROSITA AVE Westbound					CAMPBELL AVE Northbound					ROSITA AVE Eastbound					
Start Time	Right	Thru	Left	Peds	App. Total	Right	Thru	Left	Peds	App. Total	Right	Thru	Left	Peds	App. Total	Right	Thru	Left	Peds	App. Total	Int. Total
04:30 PM	0	0	0	0	0	0	0	0	0	0	0	0	0	0	0	0	0	0	0	0	0
04:45 PM	0	0	0	0	0	0	0	0	0	0	0	0	0	0	0	0	0	0	0	0	0
Total	0	1	0	0	1	0	0	0	0	0	0	0	0	0	0	0	0	1	0	1	2
05:00 PM	0	0	0	0	0	0	0	0	0	0	0	0	0	0	0	0	0	0	0	0	0
05:15 PM	0	0	0	0	0	0	0	0	0	0	0	0	0	0	0	1	0	0	0	1	1
05:30 PM	0	0	0	0	0	0	0	0	0	0	0	0	0	0	0	0	0	0	0	0	0
05:45 PM	0	0	0	0	0	0	0	0	0	0	0	0	0	0	0	0	0	0	0	0	0
Total	0	0	0	0	0	0	0	0	0	0	0	0	0	0	0	1	0	0	0	1	1
06:00 PM	0	0	2	0	2	0	0	0	0	0	2	0	0	0	2	0	0	0	0	0	4
06:15 PM	0	0	0	0	0	2	0	0	0	2	0	0	0	0	0	0	0	0	0	0	2
06:30 PM	0	0	0	0	0	0	0	0	0	0	0	0	0	0	0	0	1	0	0	1	1
06:45 PM	0	0	0	0	0	0	0	0	0	0	0	0	0	0	0	0	0	0	0	0	0
Total	0	0	2	0	2	2	0	0	0	2	2	0	0	0	2	0	1	0	0	1	7
Grand Total	2	10	3	0	15	5	6	0	0	11	3	11	1	0	15	2	4	6	0	12	53
Apprch %	13.3	66.7	20	0		45.5	54.5	0	0		20	73.3	6.7	0		16.7	33.3	50	0		
Total %	3.8	18.9	5.7	0	28.3	9.4	11.3	0	0	20.8	5.7	20.8	1.9	0	28.3	3.8	7.5	11.3	0	22.6	

	CAMPBELL AVE Southbound				ROSITA AVE Westbound				CAMPBELL AVE Northbound				ROSITA AVE Eastbound				
Start Time	Right	Thru	Left	App. Total	Right	Thru	Left	App. Total	Right	Thru	Left	App. Total	Right	Thru	Left	App. Total	Int. Total
Peak Hour Analysis From 07:00 AM to 10:45 AM - Peak 1 of 1																	
Peak Hour for Entire Intersection Begins at 07:15 AM																	
07:15 AM	0	0	0	0	0	0	0	0	0	0	0	0	0	0	**1**	**1**	1
07:30 AM	0	**1**	0	1	**1**	0	0	**1**	0	**4**	0	**4**	0	0	0	0	**6**
07:45 AM	0	0	0	0	0	0	0	0	0	2	0	2	0	0	0	0	2
08:00 AM	**1**	1	0	**2**	0	0	0	0	0	1	0	1	0	0	0	0	3
Total Volume	1	2	0	3	1	0	0	1	0	7	0	7	0	0	1	1	12
% App. Total	33.3	66.7	0		100	0	0		0	100	0		0	0	100		
PHF	.250	.500	.000	.375	.250	.000	.000	.250	.000	.438	.000	.438	.000	.000	.250	.250	.500

Traffic Data Service

San Jose, CA
(408) 622-4787
tdsbay@cs.com

File Name : 6 FINAL
Site Code : 00000006
Start Date : 3/12/2019
Page No : 3

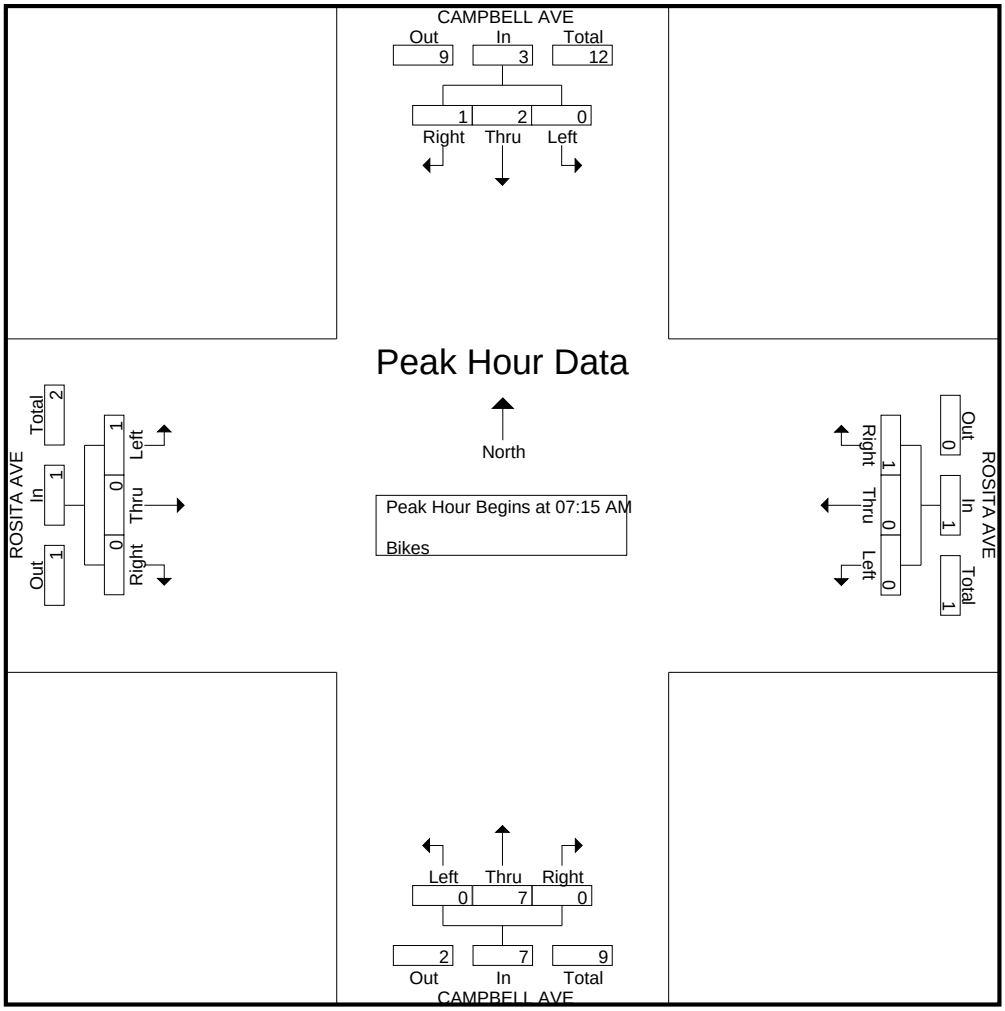

Peak Hour Analysis From 11:00 AM to 02:45 PM - Peak 1 of 1
Peak Hour for Entire Intersection Begins at 01:00 PM

01:00 PM	0	0	0	0	0	0	0	0	0	0	0	0	0	0	**1**	**1**	**1**
01:15 PM	0	0	0	0	0	**1**	0	**1**	0	0	0	0	0	0	0	0	1
01:30 PM	0	**1**	0	**1**	0	0	0	0	0	0	0	0	0	0	0	0	1
01:45 PM	0	0	0	0	0	0	0	0	0	**1**	0	**1**	0	0	0	0	1
Total Volume	0	1	0	1	0	1	0	1	0	1	0	1	0	0	1	1	4
% App. Total	0	100	0		0	100	0		0	100	0		0	0	100		
PHF	.000	.250	.000	.250	.000	.250	.000	.250	.000	.250	.000	.250	.000	.000	.250	.250	1.00

Traffic Data Service

San Jose, CA
(408) 622-4787
tdsbay@cs.com

File Name : 6 FINAL
Site Code : 00000006
Start Date : 3/12/2019
Page No : 4

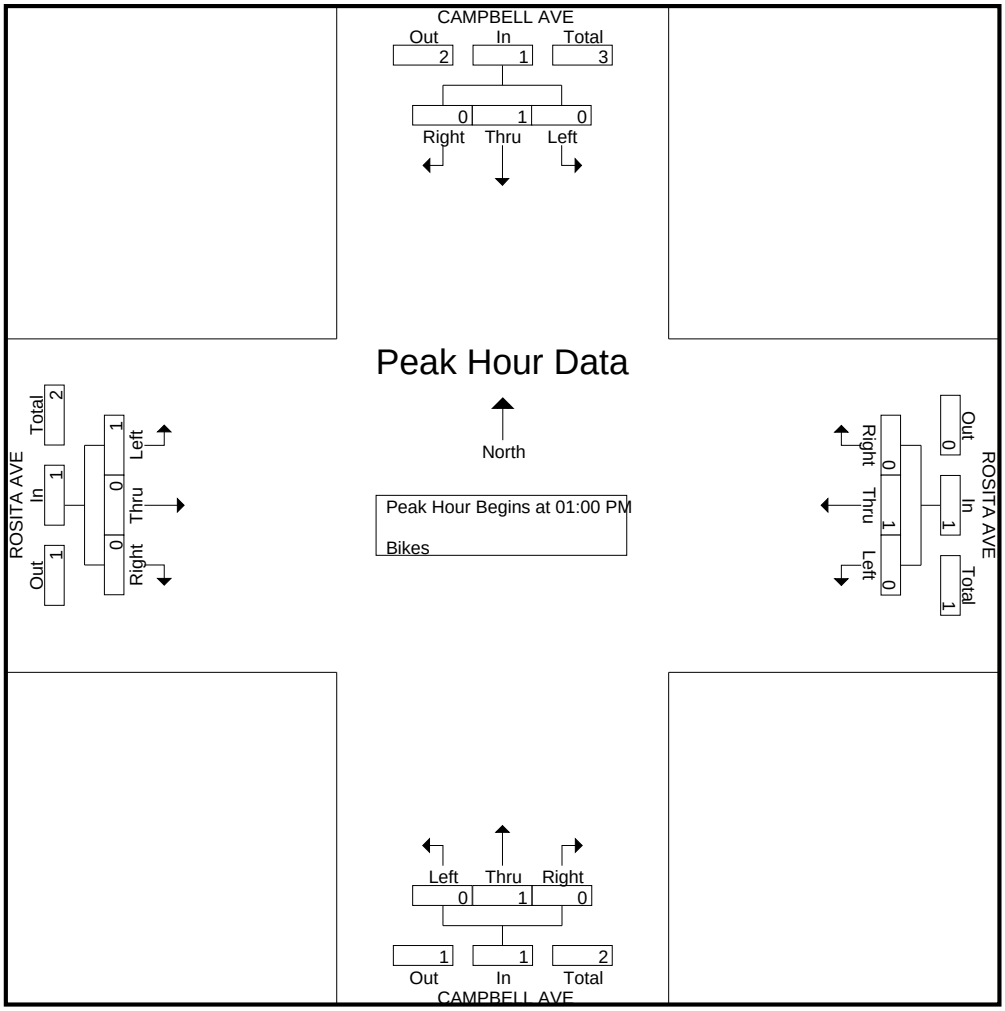

Peak Hour Analysis From 03:00 PM to 06:45 PM - Peak 1 of 1
Peak Hour for Entire Intersection Begins at 03:00 PM

03:00 PM	0	1	0	1	0	0	0	0	0	0	0	0	0	**1**	0	**1**	2
03:15 PM	0	1	**1**	**2**	0	0	0	0	0	**1**	0	1	0	0	0	0	**3**
03:30 PM	0	0	0	0	0	0	0	0	**1**	1	0	**2**	0	0	0	0	2
03:45 PM	0	**2**	0	2	0	0	0	0	0	0	0	0	0	1	0	1	3
Total Volume	0	4	1	5	0	0	0	0	1	2	0	3	0	2	0	2	10
% App. Total	0	80	20		0	0	0		33.3	66.7	0		0	100	0		
PHF	.000	.500	.250	.625	.000	.000	.000	.000	.250	.500	.000	.375	.000	.500	.000	.500	.833

Traffic Data Service

San Jose, CA
(408) 622-4787
tdsbay@cs.com

File Name : 6 FINAL
Site Code : 00000006
Start Date : 3/12/2019
Page No : 5

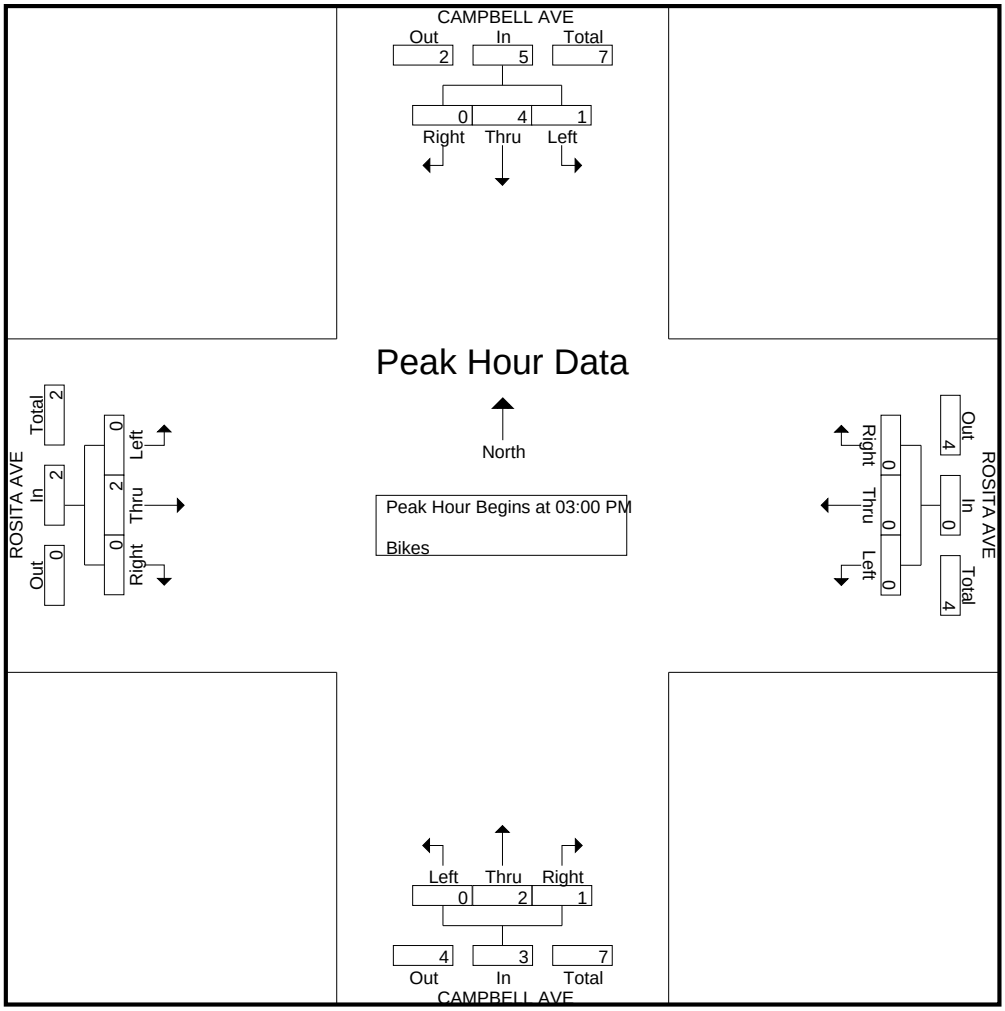

Peak Hour Analysis From 07:00 AM to 06:45 PM - Peak 1 of 1
Peak Hour for Entire Intersection Begins at 07:15 AM

07:15 AM	0	0	0	0	0	0	0	0	0	0	0	0	0	0	**1**	**1**	1
07:30 AM	0	**1**	0	1	**1**	0	0	**1**	0	**4**	0	**4**	0	0	0	0	**6**
07:45 AM	0	0	0	0	0	0	0	0	0	2	0	2	0	0	0	0	2
08:00 AM	**1**	1	0	**2**	0	0	0	0	0	1	0	1	0	0	0	0	3
Total Volume	1	2	0	3	1	0	0	1	0	7	0	7	0	0	1	1	12
% App. Total	33.3	66.7	0		100	0	0		0	100	0		0	0	100		
PHF	.250	.500	.000	.375	.250	.000	.000	.250	.000	.438	.000	.438	.000	.000	.250	.250	.500

Traffic Data Service

San Jose, CA
(408) 622-4787
tdsbay@cs.com

File Name : 6 FINAL
Site Code : 00000006
Start Date : 3/12/2019
Page No : 6

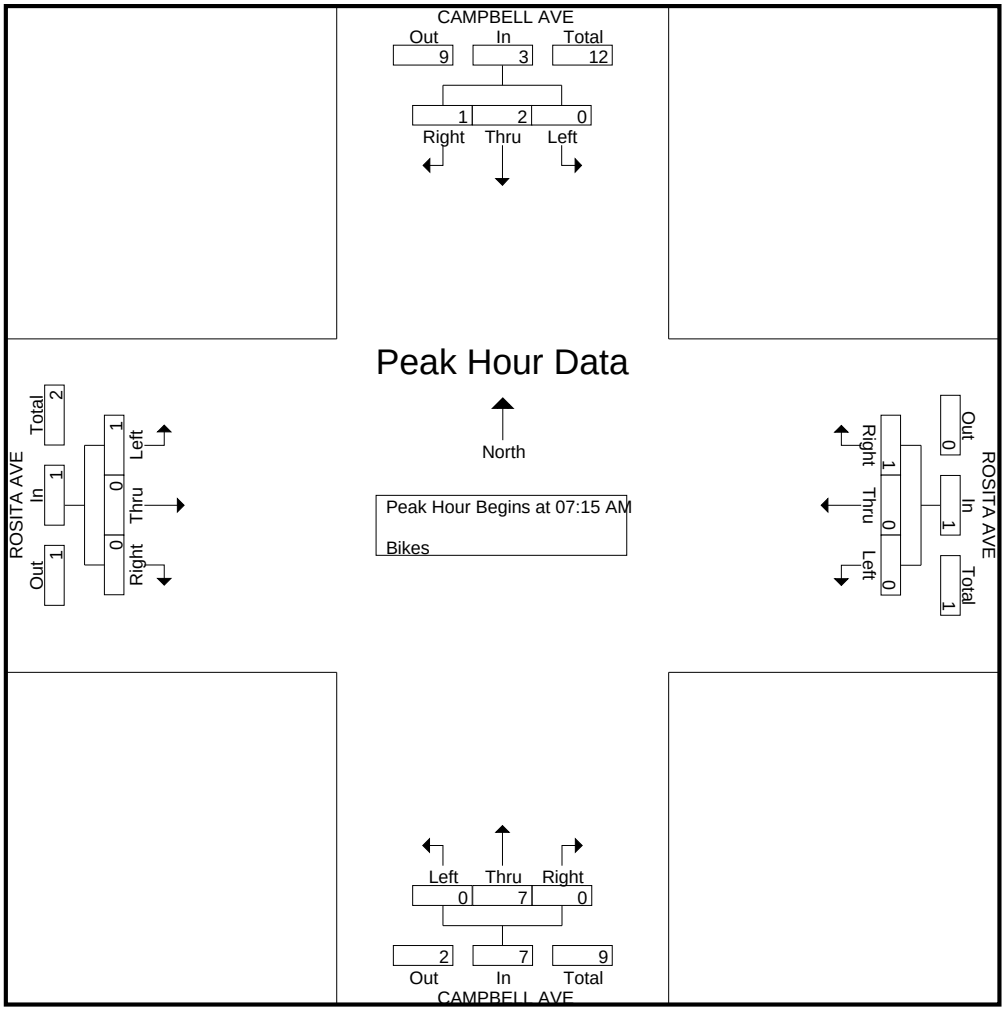

Traffic Data Service -- San Jose, CA
Speed Report

CustomList-3227 -- English (ENU)

Datasets:
Site: **[4] ARBOLEDA DR BT CUESTA DR AND CAMPBELL AVE**
Data type: Axle sensors - Paired (Class/Speed/Count)

Profile:
Included classes: 1, 2, 3, 4, 5, 6, 7, 8, 9, 10, 11, 12, 13
Speed range: 0 - 100 mph.
Direction: East (bound), P = East, Lane = 0-16
Name: Default Profile
Scheme: Vehicle classification (Scheme F)
Units: Non metric (ft, mi, ft/s, mph, lb, ton)

Column Legend:
0 [Time] 24-hour time (0000 - 2359)
1 [Total] Number in time step
2 [Vbin] Speed bin totals
3 [vPace] Speed at start of pace
4 [Pace%] Percent in pace
5 [Mean] Average speed
6 [Vpp] Percentile speed

*** Tuesday, March 12, 2019**

Time	Total	Vbin	Vbin	Vbin	Vbin	Vbin	Vbin	Vbin	Vbin	Vbin	Vbin	Vbin	Vbin	Vbin	Vbin	Vbin	Vbin	vPace	Pace%	Mean	Vpp
<--		0	5	10	15	20	25	30	35	40	45	50	55	60	65	70	75	10	10		85
		5	10	15	20	25	30	35	40	45	50	55	60	65	70	75	100				
0000	0	0	0	0	0	0	0	0	0	0	0	0	0	0	0	0	0	-	-	-	-
0100	0	0	0	0	0	0	0	0	0	0	0	0	0	0	0	0	0	-	-	-	-
0200	0	0	0	0	0	0	0	0	0	0	0	0	0	0	0	0	0	-	-	-	-
0300	0	0	0	0	0	0	0	0	0	0	0	0	0	0	0	0	0	-	-	-	-
0400	0	0	0	0	0	0	0	0	0	0	0	0	0	0	0	0	0	-	-	-	-
0500	1	0	0	0	0	1	0	0	0	0	0	0	0	0	0	0	0	14.3	100.0	24.1	-
0600	1	0	0	0	0	1	0	0	0	0	0	0	0	0	0	0	0	11.1	100.0	20.9	-
0700	4	0	0	1	1	0	1	1	0	0	0	0	0	0	0	0	0	9.7	50.00	22.2	-
0800	38	0	0	4	4	11	16	3	0	0	0	0	0	0	0	0	0	17.7	76.32	24.1	27.7
0900	13	0	0	0	4	5	2	1	1	0	0	0	0	0	0	0	0	17.4	76.92	23.9	30.1
1000	13	0	0	0	4	6	2	1	0	0	0	0	0	0	0	0	0	14.2	76.92	22.2	29.3
1100	9	0	0	0	0	2	4	2	1	0	0	0	0	0	0	0	0	23.3	77.78	28.6	-
1200	11	0	0	0	3	3	4	0	1	0	0	0	0	0	0	0	0	17.0	81.82	24.7	30.2
1300	11	0	0	0	1	4	5	1	0	0	0	0	0	0	0	0	0	21.0	90.91	25.9	30.2
1400	13	0	0	0	1	3	5	4	0	0	0	0	0	0	0	0	0	20.8	69.23	27.4	34.2
1500	28	0	0	2	4	10	4	6	2	0	0	0	0	0	0	0	0	20.9	57.14	24.8	32.9
1600	35	0	0	2	0	7	12	12	2	0	0	0	0	0	0	0	0	24.3	74.29	28.0	33.0
1700	39	0	0	0	1	10	13	12	3	0	0	0	0	0	0	0	0	21.6	76.92	27.9	33.0
1800	33	0	0	1	5	9	11	6	0	1	0	0	0	0	0	0	0	21.4	72.73	25.4	30.8
1900	7	0	0	1	1	4	1	0	0	0	0	0	0	0	0	0	0	12.1	85.71	20.5	-
2000	7	0	0	0	2	2	1	2	0	0	0	0	0	0	0	0	0	16.4	71.43	24.7	-
2100	1	0	0	0	0	1	0	0	0	0	0	0	0	0	0	0	0	14.5	100.0	24.3	-
2200	1	0	0	0	0	1	0	0	0	0	0	0	0	0	0	0	0	13.6	100.0	23.5	-
2300	0	0	0	0	0	0	0	0	0	0	0	0	0	0	0	0	0	-	-	-	-
07-19	**247**	**0**	**0**	**10**	**28**	**70**	**79**	**49**	**10**	**1**	**0**	**0**	**0**	**0**	**0**	**0**	**0**	**22.6**	**65.18**	**25.8**	**31.5**
06-22	**263**	**0**	**0**	**11**	**31**	**78**	**81**	**51**	**10**	**1**	**0**	**0**	**0**	**0**	**0**	**0**	**0**	**20.9**	**63.12**	**25.6**	**31.5**
06-00	**264**	**0**	**0**	**11**	**31**	**79**	**81**	**51**	**10**	**1**	**0**	**0**	**0**	**0**	**0**	**0**	**0**	**20.9**	**63.26**	**25.6**	**31.5**
00-00	**265**	**0**	**0**	**11**	**31**	**80**	**81**	**51**	**10**	**1**	**0**	**0**	**0**	**0**	**0**	**0**	**0**	**20.9**	**63.40**	**25.6**	**31.4**

Peak step 17:00 (39) **AM Peak step** 8:00 (38) **PM Peak step** 17:00 (39)

*** Grand Total**

Time	Total	Vbin	Vbin	Vbin	Vbin	Vbin	Vbin	Vbin	Vbin	Vbin	Vbin	Vbin	Vbin	Vbin	Vbin	Vbin	Vbin	vPace	Pace%	Mean	Vpp
<--		0	5	10	15	20	25	30	35	40	45	50	55	60	65	70	75	10	10		85
		5	10	15	20	25	30	35	40	45	50	55	60	65	70	75	100				
--	265	0	0	11	31	80	81	51	10	1	0	0	0	0	0	0	0	20.9	63.40	25.6	31.4

Traffic Data Service -- San Jose, CA
Speed Report

CustomList-3226 -- English (ENU)

Datasets:
Site: **[4] ARBOLEDA DR BT CUESTA DR AND CAMPBELL AVE**
Data type: Axle sensors - Paired (Class/Speed/Count)

Profile:
Included classes: 1, 2, 3, 4, 5, 6, 7, 8, 9, 10, 11, 12, 13
Speed range: 0 - 100 mph.
Direction: West (bound), P = East, Lane = 0-16
Name: Default Profile
Scheme: Vehicle classification (Scheme F)
Units: Non metric (ft, mi, ft/s, mph, lb, ton)

Column Legend:
0 [Time] 24-hour time (0000 - 2359)
1 [Total] Number in time step
2 [Vbin] Speed bin totals
3 [vPace] Speed at start of pace
4 [Pace%] Percent in pace
5 [Mean] Average speed
6 [Vpp] Percentile speed

*** Tuesday, March 12, 2019**

Time	Total	Vbin	Vbin	Vbin	Vbin	Vbin	Vbin	Vbin	Vbin	Vbin	Vbin	Vbin	Vbin	Vbin	Vbin	Vbin	Vbin	vPace	Pace%	Mean	Vpp
<--		0	5	10	15	20	25	30	35	40	45	50	55	60	65	70	75	10	10		85
		5	10	15	20	25	30	35	40	45	50	55	60	65	70	75	100				
0000	0	0	0	0	0	0	0	0	0	0	0	0	0	0	0	0	0	-	-	-	-
0100	0	0	0	0	0	0	0	0	0	0	0	0	0	0	0	0	0	-	-	-	-
0200	0	0	0	0	0	0	0	0	0	0	0	0	0	0	0	0	0	-	-	-	-
0300	0	0	0	0	0	0	0	0	0	0	0	0	0	0	0	0	0	-	-	-	-
0400	0	0	0	0	0	0	0	0	0	0	0	0	0	0	0	0	0	-	-	-	-
0500	0	0	0	0	0	0	0	0	0	0	0	0	0	0	0	0	0	-	-	-	-
0600	1	0	0	0	1	0	0	0	0	0	0	0	0	0	0	0	0	5.6	100.0	15.4	-
0700	1	0	0	0	0	1	0	0	0	0	0	0	0	0	0	0	0	15.1	100.0	25.0	-
0800	9	0	0	0	0	7	2	0	0	0	0	0	0	0	0	0	0	18.7	100.0	23.9	-
0900	6	0	0	1	1	4	0	0	0	0	0	0	0	0	0	0	0	14.1	100.0	20.6	-
1000	11	0	0	1	2	3	3	1	1	0	0	0	0	0	0	0	0	18.1	63.64	24.8	34.9
1100	5	0	0	0	2	2	1	0	0	0	0	0	0	0	0	0	0	14.5	80.00	22.3	-
1200	4	0	0	1	0	1	2	0	0	0	0	0	0	0	0	0	0	19.1	75.00	22.7	-
1300	6	0	0	1	1	2	2	0	0	0	0	0	0	0	0	0	0	19.6	83.33	22.5	-
1400	6	0	0	1	3	1	1	0	0	0	0	0	0	0	0	0	0	11.4	83.33	19.9	-
1500	5	0	0	1	2	1	1	0	0	0	0	0	0	0	0	0	0	12.4	80.00	19.4	-
1600	5	0	0	0	3	0	2	0	0	0	0	0	0	0	0	0	0	15.2	80.00	21.3	-
1700	3	0	0	0	0	2	1	0	0	0	0	0	0	0	0	0	0	16.1	100.0	24.0	-
1800	5	0	1	0	3	0	1	0	0	0	0	0	0	0	0	0	0	9.1	80.00	17.7	-
1900	5	0	0	0	2	2	1	0	0	0	0	0	0	0	0	0	0	15.3	100.0	20.5	-
2000	2	0	0	0	1	1	0	0	0	0	0	0	0	0	0	0	0	12.1	100.0	19.4	-
2100	1	0	0	0	0	1	0	0	0	0	0	0	0	0	0	0	0	14.3	100.0	24.2	-
2200	2	0	0	0	1	1	0	0	0	0	0	0	0	0	0	0	0	11.5	100.0	19.4	-
2300	0	0	0	0	0	0	0	0	0	0	0	0	0	0	0	0	0	-	-	-	-
07-19	**66**	**0**	**1**	**6**	**17**	**24**	**16**	**1**	**1**	**0**	**0**	**0**	**0**	**0**	**0**	**0**	**0**	**16.8**	**66.67**	**22.1**	**27.9**
06-22	**75**	**0**	**1**	**6**	**21**	**28**	**17**	**1**	**1**	**0**	**0**	**0**	**0**	**0**	**0**	**0**	**0**	**16.8**	**69.33**	**21.8**	**27.6**
06-00	**77**	**0**	**1**	**6**	**22**	**29**	**17**	**1**	**1**	**0**	**0**	**0**	**0**	**0**	**0**	**0**	**0**	**16.8**	**70.13**	**21.8**	**27.5**
00-00	**77**	**0**	**1**	**6**	**22**	**29**	**17**	**1**	**1**	**0**	**0**	**0**	**0**	**0**	**0**	**0**	**0**	**16.8**	**70.13**	**21.8**	**27.5**

Peak step 10:00 (11) **AM Peak step** 10:00 (11) **PM Peak step** 13:00 (6)

*** Grand Total**

Time	Total	Vbin	Vbin	Vbin	Vbin	Vbin	Vbin	Vbin	Vbin	Vbin	Vbin	Vbin	Vbin	Vbin	Vbin	Vbin	Vbin	vPace	Pace%	Mean	Vpp
<--		0	5	10	15	20	25	30	35	40	45	50	55	60	65	70	75	10	10		85
		5	10	15	20	25	30	35	40	45	50	55	60	65	70	75	100				
--	77	0	1	6	22	29	17	1	1	0	0	0	0	0	0	0	0	16.8	70.13	21.8	27.5

Traffic Data Service -- San Jose, CA
Speed Report

CustomList-3229 -- English (ENU)

Datasets:
Site: **[5] ARBOLEDA DR E OF PARMA WAY**
Data type: Axle sensors - Paired (Class/Speed/Count)

Profile:
Included classes: 1, 2, 3, 4, 5, 6, 7, 8, 9, 10, 11, 12, 13
Speed range: 0 - 100 mph.
Direction: East (bound), P = East, Lane = 0-16
Name: Default Profile
Scheme: Vehicle classification (Scheme F)
Units: Non metric (ft, mi, ft/s, mph, lb, ton)

Column Legend:
0 [Time] 24-hour time (0000 - 2359)
1 [Total] Number in time step
2 [Vbin] Speed bin totals
3 [vPace] Speed at start of pace
4 [Pace%] Percent in pace
5 [Mean] Average speed
6 [Vpp] Percentile speed

*** Tuesday, March 12, 2019**

Time	Total	Vbin	Vbin	Vbin	Vbin	Vbin	Vbin	Vbin	Vbin	Vbin	Vbin	Vbin	Vbin	Vbin	Vbin	Vbin	Vbin	vPace	Pace%	Mean	Vpp
<--		0	5	10	15	20	25	30	35	40	45	50	55	60	65	70	75	10	10		85
		5	10	15	20	25	30	35	40	45	50	55	60	65	70	75	100				
0000	0	0	0	0	0	0	0	0	0	0	0	0	0	0	0	0	0	-	-	-	-
0100	0	0	0	0	0	0	0	0	0	0	0	0	0	0	0	0	0	-	-	-	-
0200	0	0	0	0	0	0	0	0	0	0	0	0	0	0	0	0	0	-	-	-	-
0300	0	0	0	0	0	0	0	0	0	0	0	0	0	0	0	0	0	-	-	-	-
0400	0	0	0	0	0	0	0	0	0	0	0	0	0	0	0	0	0	-	-	-	-
0500	2	0	0	0	1	0	1	0	0	0	0	0	0	0	0	0	0	5.8	50.00	20.7	-
0600	2	0	0	0	1	1	0	0	0	0	0	0	0	0	0	0	0	13.6	100.0	21.3	-
0700	10	0	1	0	0	2	5	2	0	0	0	0	0	0	0	0	0	21.3	80.00	24.7	-
0800	37	0	1	1	3	8	15	7	2	0	0	0	0	0	0	0	0	22.3	70.27	26.3	32.7
0900	15	0	0	1	0	4	3	6	0	1	0	0	0	0	0	0	0	23.0	80.00	28.2	32.8
1000	13	0	0	0	3	7	2	0	1	0	0	0	0	0	0	0	0	17.1	84.62	22.7	26.9
1100	13	0	1	2	1	2	5	2	0	0	0	0	0	0	0	0	0	21.5	61.54	21.9	31.0
1200	12	0	0	0	1	4	6	1	0	0	0	0	0	0	0	0	0	19.0	83.33	26.0	29.1
1300	13	0	0	0	1	6	4	2	0	0	0	0	0	0	0	0	0	21.5	92.31	25.7	29.8
1400	13	0	0	0	0	4	2	5	2	0	0	0	0	0	0	0	0	23.7	76.92	29.5	35.7
1500	19	2	0	0	1	1	7	5	3	0	0	0	0	0	0	0	0	26.8	68.42	27.8	36.7
1600	30	0	0	0	0	2	7	13	6	2	0	0	0	0	0	0	0	27.7	80.00	32.3	37.4
1700	58	0	0	1	2	6	17	22	10	0	0	0	0	0	0	0	0	26.2	70.69	30.0	35.5
1800	41	0	0	0	3	9	18	8	3	0	0	0	0	0	0	0	0	21.1	73.17	27.8	32.5
1900	6	0	0	0	1	1	2	2	0	0	0	0	0	0	0	0	0	20.2	83.33	25.7	-
2000	4	0	0	0	0	2	2	0	0	0	0	0	0	0	0	0	0	18.8	100.0	24.8	-
2100	2	0	0	0	0	1	1	0	0	0	0	0	0	0	0	0	0	15.5	100.0	23.4	-
2200	2	0	0	0	0	0	2	0	0	0	0	0	0	0	0	0	0	18.6	100.0	27.6	-
2300	1	0	0	0	0	0	1	0	0	0	0	0	0	0	0	0	0	19.8	100.0	29.6	-
07-19	**274**	**2**	**3**	**5**	**15**	**55**	**91**	**73**	**27**	**3**	**0**	**0**	**0**	**0**	**0**	**0**	**0**	**23.2**	**62.77**	**27.8**	**34.0**
06-22	**288**	**2**	**3**	**5**	**17**	**60**	**96**	**75**	**27**	**3**	**0**	**0**	**0**	**0**	**0**	**0**	**0**	**23.2**	**63.19**	**27.7**	**33.9**
06-00	**291**	**2**	**3**	**5**	**17**	**60**	**99**	**75**	**27**	**3**	**0**	**0**	**0**	**0**	**0**	**0**	**0**	**23.2**	**63.57**	**27.7**	**33.8**
00-00	**293**	**2**	**3**	**5**	**18**	**60**	**100**	**75**	**27**	**3**	**0**	**0**	**0**	**0**	**0**	**0**	**0**	**23.2**	**63.48**	**27.6**	**33.8**

Peak step 17:00 (58) **AM Peak step** 8:00 (37) **PM Peak step** 17:00 (58)

*** Grand Total**

Time	Total	Vbin	Vbin	Vbin	Vbin	Vbin	Vbin	Vbin	Vbin	Vbin	Vbin	Vbin	Vbin	Vbin	Vbin	Vbin	Vbin	vPace	Pace%	Mean	Vpp
<--		0	5	10	15	20	25	30	35	40	45	50	55	60	65	70	75	10	10		85
		5	10	15	20	25	30	35	40	45	50	55	60	65	70	75	100				
--	293	2	3	5	18	60	100	75	27	3	0	0	0	0	0	0	0	23.2	63.48	27.6	33.8

Traffic Data Service -- San Jose, CA
Speed Report

CustomList-3228 -- English (ENU)

Datasets:
Site: **[5] ARBOLEDA DR E OF PARMA WAY**
Data type: Axle sensors - Paired (Class/Speed/Count)

Profile:
Included classes: 1, 2, 3, 4, 5, 6, 7, 8, 9, 10, 11, 12, 13
Speed range: 0 - 100 mph.
Direction: West (bound), P = East, Lane = 0-16
Name: Default Profile
Scheme: Vehicle classification (Scheme F)
Units: Non metric (ft, mi, ft/s, mph, lb, ton)

Column Legend:
0 [Time] 24-hour time (0000 - 2359)
1 [Total] Number in time step
2 [Vbin] Speed bin totals
3 [vPace] Speed at start of pace
4 [Pace%] Percent in pace
5 [Mean] Average speed
6 [Vpp] Percentile speed

*** Tuesday, March 12, 2019**

Time	Total	Vbin	Vbin	Vbin	Vbin	Vbin	Vbin	Vbin	Vbin	Vbin	Vbin	Vbin	Vbin	Vbin	Vbin	Vbin	Vbin	vPace	Pace%	Mean	Vpp
<--		0	5	10	15	20	25	30	35	40	45	50	55	60	65	70	75	10	10		85
		5	10	15	20	25	30	35	40	45	50	55	60	65	70	75	100				
0000	0	0	0	0	0	0	0	0	0	0	0	0	0	0	0	0	0	-	-	-	-
0100	1	0	0	0	0	1	0	0	0	0	0	0	0	0	0	0	0	13.1	100.0	22.9	-
0200	0	0	0	0	0	0	0	0	0	0	0	0	0	0	0	0	0	-	-	-	-
0300	0	0	0	0	0	0	0	0	0	0	0	0	0	0	0	0	0	-	-	-	-
0400	0	0	0	0	0	0	0	0	0	0	0	0	0	0	0	0	0	-	-	-	-
0500	1	0	0	0	0	0	1	0	0	0	0	0	0	0	0	0	0	17.6	100.0	27.4	-
0600	3	0	0	2	1	0	0	0	0	0	0	0	0	0	0	0	0	7.4	100.0	14.8	-
0700	8	0	0	0	2	2	2	2	0	0	0	0	0	0	0	0	0	17.9	75.00	25.0	-
0800	33	0	1	0	1	6	16	8	0	1	0	0	0	0	0	0	0	21.7	84.85	27.5	31.0
0900	7	0	0	1	0	1	5	0	0	0	0	0	0	0	0	0	0	18.9	85.71	25.3	-
1000	13	0	0	2	0	3	4	3	0	1	0	0	0	0	0	0	0	21.9	76.92	26.5	31.7
1100	11	0	1	1	2	4	2	1	0	0	0	0	0	0	0	0	0	15.9	63.64	21.0	28.8
1200	15	0	0	1	1	6	5	2	0	0	0	0	0	0	0	0	0	21.1	80.00	24.9	30.4
1300	7	0	0	0	0	1	5	1	0	0	0	0	0	0	0	0	0	21.8	100.0	26.7	-
1400	9	0	0	0	0	4	2	2	1	0	0	0	0	0	0	0	0	20.6	77.78	26.8	-
1500	24	1	0	0	1	5	10	6	1	0	0	0	0	0	0	0	0	21.9	79.17	26.6	31.7
1600	13	0	0	0	0	5	7	1	0	0	0	0	0	0	0	0	0	19.0	92.31	26.2	28.7
1700	21	0	0	0	2	4	9	5	1	0	0	0	0	0	0	0	0	20.6	71.43	26.8	31.7
1800	21	0	1	0	2	8	8	1	0	1	0	0	0	0	0	0	0	18.5	85.71	24.3	28.2
1900	19	0	0	0	2	9	5	3	0	0	0	0	0	0	0	0	0	21.4	84.21	25.4	30.5
2000	8	0	0	0	2	3	2	0	1	0	0	0	0	0	0	0	0	17.3	75.00	24.2	-
2100	3	0	0	0	1	1	1	0	0	0	0	0	0	0	0	0	0	16.2	100.0	23.0	-
2200	4	0	0	0	0	2	2	0	0	0	0	0	0	0	0	0	0	20.0	100.0	25.7	-
2300	2	0	0	0	0	1	0	1	0	0	0	0	0	0	0	0	0	22.1	100.0	27.9	-
07-19	**182**	**1**	**3**	**5**	**11**	**49**	**75**	**32**	**3**	**3**	**0**	**0**	**0**	**0**	**0**	**0**	**0**	**21.3**	**73.63**	**25.9**	**30.9**
06-22	**215**	**1**	**3**	**7**	**17**	**62**	**83**	**35**	**4**	**3**	**0**	**0**	**0**	**0**	**0**	**0**	**0**	**21.4**	**72.56**	**25.6**	**30.6**
06-00	**221**	**1**	**3**	**7**	**17**	**65**	**85**	**36**	**4**	**3**	**0**	**0**	**0**	**0**	**0**	**0**	**0**	**21.4**	**72.85**	**25.6**	**30.6**
00-00	**223**	**1**	**3**	**7**	**17**	**66**	**86**	**36**	**4**	**3**	**0**	**0**	**0**	**0**	**0**	**0**	**0**	**21.4**	**73.09**	**25.6**	**30.6**

Peak step 8:00 (33) **AM Peak step** 8:00 (33) **PM Peak step** 15:00 (24)

*** Grand Total**

Time	Total	Vbin	Vbin	Vbin	Vbin	Vbin	Vbin	Vbin	Vbin	Vbin	Vbin	Vbin	Vbin	Vbin	Vbin	Vbin	Vbin	vPace	Pace%	Mean	Vpp
<--		0	5	10	15	20	25	30	35	40	45	50	55	60	65	70	75	10	10		85
		5	10	15	20	25	30	35	40	45	50	55	60	65	70	75	100				
--	**223**	**1**	**3**	**7**	**17**	**66**	**86**	**36**	**4**	**3**	**0**	**0**	**0**	**0**	**0**	**0**	**0**	**21.4**	**73.09**	**25.6**	**30.6**

Traffic Data Service -- San Jose, CA
Speed Report

CustomList-3230 -- English (ENU)

Datasets:
Site: **[6] CAMPBELL AVE BT ARBOLEDA DR AND GLEN ALTO DR**
Data type: Axle sensors - Paired (Class/Speed/Count)

Profile:
Included classes: 1, 2, 3, 4, 5, 6, 7, 8, 9, 10, 11, 12, 13
Speed range: 0 - 100 mph.
Direction: North (bound), P = North, Lane = 0-16
Name: Default Profile
Scheme: Vehicle classification (Scheme F)
Units: Non metric (ft, mi, ft/s, mph, lb, ton)

Column Legend:
0 [Time] 24-hour time (0000 - 2359)
1 [Total] Number in time step
2 [Vbin] Speed bin totals
3 [vPace] Speed at start of pace
4 [Pace%] Percent in pace
5 [Mean] Average speed
6 [Vpp] Percentile speed

*** Tuesday, March 12, 2019**

Time	Total	Vbin	Vbin	Vbin	Vbin	Vbin	Vbin	Vbin	Vbin	Vbin	Vbin	Vbin	Vbin	Vbin	Vbin	Vbin	Vbin	vPace	Pace%	Mean	Vpp
<--		0	5	10	15	20	25	30	35	40	45	50	55	60	65	70	75	10	10		85
		5	10	15	20	25	30	35	40	45	50	55	60	65	70	75	100				
0000	0	0	0	0	0	0	0	0	0	0	0	0	0	0	0	0	0	-	-	-	-
0100	0	0	0	0	0	0	0	0	0	0	0	0	0	0	0	0	0	-	-	-	-
0200	0	0	0	0	0	0	0	0	0	0	0	0	0	0	0	0	0	-	-	-	-
0300	0	0	0	0	0	0	0	0	0	0	0	0	0	0	0	0	0	-	-	-	-
0400	0	0	0	0	0	0	0	0	0	0	0	0	0	0	0	0	0	-	-	-	-
0500	5	0	0	0	1	1	0	3	0	0	0	0	0	0	0	0	0	23.3	80.00	27.2	-
0600	10	0	0	0	0	4	5	1	0	0	0	0	0	0	0	0	0	20.8	100.0	26.1	-
0700	81	0	0	3	2	14	44	14	3	1	0	0	0	0	0	0	0	21.9	77.78	27.3	31.4
0800	173	1	0	1	3	33	81	48	6	0	0	0	0	0	0	0	0	23.0	82.66	27.9	32.3
0900	81	0	0	2	3	13	33	22	7	0	0	0	1	0	0	0	0	22.9	70.37	28.2	32.7
1000	58	0	0	0	6	9	22	14	7	0	0	0	0	0	0	0	0	23.8	70.69	28.1	33.6
1100	59	0	0	0	3	11	26	14	5	0	0	0	0	0	0	0	0	21.1	71.19	28.1	34.1
1200	51	0	0	0	4	7	25	11	4	0	0	0	0	0	0	0	0	24.0	76.47	28.1	33.4
1300	47	0	0	1	1	8	16	17	4	0	0	0	0	0	0	0	0	23.0	72.34	28.8	33.1
1400	60	0	1	0	2	10	18	23	5	1	0	0	0	0	0	0	0	23.0	76.67	28.9	32.7
1500	113	0	1	1	2	15	51	36	6	1	0	0	0	0	0	0	0	22.8	78.76	28.6	32.6
1600	74	0	0	2	3	8	29	30	2	0	0	0	0	0	0	0	0	24.5	79.73	28.7	33.3
1700	75	0	0	1	2	12	37	21	2	0	0	0	0	0	0	0	0	22.9	82.67	28.2	32.3
1800	52	0	0	1	2	5	31	11	2	0	0	0	0	0	0	0	0	24.4	82.69	28.1	32.9
1900	39	0	0	1	1	11	13	12	1	0	0	0	0	0	0	0	0	22.6	79.49	27.5	32.3
2000	19	0	0	0	0	3	11	3	2	0	0	0	0	0	0	0	0	21.6	78.95	28.6	34.2
2100	5	0	0	0	0	0	1	2	2	0	0	0	0	0	0	0	0	25.3	80.00	33.0	-
2200	2	0	0	0	0	2	0	0	0	0	0	0	0	0	0	0	0	13.6	100.0	22.9	-
2300	3	0	0	0	0	1	2	0	0	0	0	0	0	0	0	0	0	19.2	100.0	27.3	-
07-19	**924**	**1**	**2**	**12**	**33**	**145**	**413**	**261**	**53**	**3**	**0**	**0**	**1**	**0**	**0**	**0**	**0**	**23.8**	**75.76**	**28.2**	**32.7**
06-22	**997**	**1**	**2**	**13**	**34**	**163**	**443**	**279**	**58**	**3**	**0**	**0**	**1**	**0**	**0**	**0**	**0**	**23.0**	**75.43**	**28.2**	**32.7**
06-00	**1002**	**1**	**2**	**13**	**34**	**166**	**445**	**279**	**58**	**3**	**0**	**0**	**1**	**0**	**0**	**0**	**0**	**23.0**	**75.45**	**28.2**	**32.7**
00-00	**1007**	**1**	**2**	**13**	**35**	**167**	**445**	**282**	**58**	**3**	**0**	**0**	**1**	**0**	**0**	**0**	**0**	**23.0**	**75.37**	**28.2**	**32.7**

Peak step 8:00 (173) **AM Peak step** 8:00 (173) **PM Peak step** 15:00 (113)

*** Grand Total**

Time	Total	Vbin	Vbin	Vbin	Vbin	Vbin	Vbin	Vbin	Vbin	Vbin	Vbin	Vbin	Vbin	Vbin	Vbin	Vbin	Vbin	vPace	Pace%	Mean	Vpp
<--		0	5	10	15	20	25	30	35	40	45	50	55	60	65	70	75	10	10		85
		5	10	15	20	25	30	35	40	45	50	55	60	65	70	75	100				
--	1007	1	2	13	35	167	445	282	58	3	0	0	1	0	0	0	0	23.0	75.37	28.2	32.7

Traffic Data Service -- San Jose, CA
Speed Report

CustomList-3231 -- English (ENU)

Datasets:
Site: **[6] CAMPBELL AVE BT ARBOLEDA DR AND GLEN ALTO DR**
Data type: Axle sensors - Paired (Class/Speed/Count)

Profile:
Included classes: 1, 2, 3, 4, 5, 6, 7, 8, 9, 10, 11, 12, 13
Speed range: 0 - 100 mph.
Direction: South (bound), P = North, Lane = 0-16
Name: Default Profile
Scheme: Vehicle classification (Scheme F)
Units: Non metric (ft, mi, ft/s, mph, lb, ton)

Column Legend:
0 [Time] 24-hour time (0000 - 2359)
1 [Total] Number in time step
2 [Vbin] Speed bin totals
3 [vPace] Speed at start of pace
4 [Pace%] Percent in pace
5 [Mean] Average speed
6 [Vpp] Percentile speed

*** Tuesday, March 12, 2019**

Time	Total	Vbin	Vbin	Vbin	Vbin	Vbin	Vbin	Vbin	Vbin	Vbin	Vbin	Vbin	Vbin	Vbin	Vbin	Vbin	Vbin	vPace	Pace%	Mean	Vpp
<--		0	5	10	15	20	25	30	35	40	45	50	55	60	65	70	75	10	10		85
		5	10	15	20	25	30	35	40	45	50	55	60	65	70	75	100				
0000	2	0	0	0	0	0	1	1	0	0	0	0	0	0	0	0	0	21.9	100.0	29.1	-
0100	1	0	0	0	0	0	0	0	1	0	0	0	0	0	0	0	0	26.7	100.0	36.6	-
0200	0	0	0	0	0	0	0	0	0	0	0	0	0	0	0	0	0	-	-	-	-
0300	0	0	0	0	0	0	0	0	0	0	0	0	0	0	0	0	0	-	-	-	-
0400	1	0	0	0	0	0	0	1	0	0	0	0	0	0	0	0	0	24.4	100.0	34.2	-
0500	2	0	0	0	0	1	1	0	0	0	0	0	0	0	0	0	0	20.1	100.0	27.0	-
0600	8	0	0	2	1	3	1	1	0	0	0	0	0	0	0	0	0	12.8	50.00	22.5	-
0700	60	0	0	1	4	21	25	8	1	0	0	0	0	0	0	0	0	21.6	85.00	25.6	30.0
0800	199	0	0	3	5	49	101	33	7	1	0	0	0	0	0	0	0	22.1	83.92	27.0	31.4
0900	47	0	0	1	1	12	21	12	0	0	0	0	0	0	0	0	0	21.8	80.85	26.8	31.3
1000	36	0	0	1	3	10	17	5	0	0	0	0	0	0	0	0	0	21.9	83.33	25.7	30.2
1100	55	0	0	0	1	19	27	5	3	0	0	0	0	0	0	0	0	20.4	87.27	26.9	30.0
1200	48	0	0	0	4	19	18	6	1	0	0	0	0	0	0	0	0	20.2	81.25	25.1	30.0
1300	44	0	1	0	2	12	19	7	3	0	0	0	0	0	0	0	0	21.0	79.55	26.6	30.9
1400	122	0	1	0	1	22	62	32	3	1	0	0	0	0	0	0	0	22.7	86.89	27.9	31.8
1500	130	0	0	6	8	20	66	26	4	0	0	0	0	0	0	0	0	23.4	75.38	26.4	31.2
1600	120	0	2	1	2	18	52	39	5	1	0	0	0	0	0	0	0	24.6	77.50	28.0	32.8
1700	162	0	0	0	6	31	82	37	6	0	0	0	0	0	0	0	0	23.4	86.42	27.9	31.7
1800	96	0	1	2	4	26	38	24	0	0	0	1	0	0	0	0	0	21.8	82.29	26.7	31.0
1900	45	0	0	0	1	15	20	8	1	0	0	0	0	0	0	0	0	21.8	82.22	26.8	31.1
2000	36	0	0	0	0	12	14	8	2	0	0	0	0	0	0	0	0	22.7	83.33	27.7	32.4
2100	22	0	0	0	1	7	10	2	1	1	0	0	0	0	0	0	0	18.8	77.27	26.9	32.1
2200	12	0	0	0	0	0	8	3	1	0	0	0	0	0	0	0	0	25.4	100.0	28.6	34.1
2300	6	0	0	0	0	0	5	1	0	0	0	0	0	0	0	0	0	22.0	100.0	28.5	-
07-19	**1119**	**0**	**5**	**15**	**41**	**259**	**528**	**234**	**33**	**3**	**0**	**1**	**0**	**0**	**0**	**0**	**0**	**22.0**	**78.91**	**27.0**	**31.3**
06-22	**1230**	**0**	**5**	**17**	**44**	**296**	**573**	**253**	**37**	**4**	**0**	**1**	**0**	**0**	**0**	**0**	**0**	**22.0**	**78.62**	**27.0**	**31.3**
06-00	**1248**	**0**	**5**	**17**	**44**	**296**	**586**	**257**	**38**	**4**	**0**	**1**	**0**	**0**	**0**	**0**	**0**	**22.0**	**78.77**	**27.0**	**31.3**
00-00	**1254**	**0**	**5**	**17**	**44**	**297**	**588**	**259**	**39**	**4**	**0**	**1**	**0**	**0**	**0**	**0**	**0**	**22.0**	**78.71**	**27.0**	**31.4**

Peak step 8:00 (199) **AM Peak step** 8:00 (199) **PM Peak step** 17:00 (162)

*** Grand Total**

Time	Total	Vbin	Vbin	Vbin	Vbin	Vbin	Vbin	Vbin	Vbin	Vbin	Vbin	Vbin	Vbin	Vbin	Vbin	Vbin	Vbin	vPace	Pace%	Mean	Vpp
<--		0	5	10	15	20	25	30	35	40	45	50	55	60	65	70	75	10	10		85
		5	10	15	20	25	30	35	40	45	50	55	60	65	70	75	100				
--	**1254**	**0**	**5**	**17**	**44**	**297**	**588**	**259**	**39**	**4**	**0**	**1**	**0**	**0**	**0**	**0**	**0**	**22.0**	**78.71**	**27.0**	**31.4**

Traffic Data Service -- San Jose, CA
Speed Report

CustomList-3225 -- English (ENU)

Datasets:
Site: **[3] CUESTA DR BT CLARK AVE AND SPRINGER RD**
Data type: Axle sensors - Paired (Class/Speed/Count)

Profile:
Included classes: 1, 2, 3, 4, 5, 6, 7, 8, 9, 10, 11, 12, 13
Speed range: 0 - 100 mph.
Direction: East (bound), P = East, Lane = 0-16
Name: Default Profile
Scheme: Vehicle classification (Scheme F)
Units: Non metric (ft, mi, ft/s, mph, lb, ton)

Column Legend:
0 [Time] 24-hour time (0000 - 2359)
1 [Total] Number in time step
2 [Vbin] Speed bin totals
3 [vPace] Speed at start of pace
4 [Pace%] Percent in pace
5 [Mean] Average speed
6 [Vpp] Percentile speed

*** Tuesday, March 12, 2019**

Time	Total	Vbin	Vbin	Vbin	Vbin	Vbin	Vbin	Vbin	Vbin	Vbin	Vbin	Vbin	Vbin	Vbin	Vbin	Vbin	Vbin	vPace	Pace%	Mean	Vpp
<--		0	5	10	15	20	25	30	35	40	45	50	55	60	65	70	75	10	10		85
		5	10	15	20	25	30	35	40	45	50	55	60	65	70	75	100				
0000	8	0	0	0	0	0	2	3	0	2	1	0	0	0	0	0	0	24.7	62.50	35.8	-
0100	5	0	0	0	0	0	1	1	1	1	1	0	0	0	0	0	0	26.6	60.00	37.4	-
0200	0	0	0	0	0	0	0	0	0	0	0	0	0	0	0	0	0	-	-	-	-
0300	2	0	0	1	0	0	0	1	0	0	0	0	0	0	0	0	0	2.6	50.00	22.5	-
0400	10	0	0	0	0	0	3	6	0	0	0	0	1	0	0	0	0	24.6	90.00	34.5	-
0500	31	0	0	0	0	1	4	9	12	4	1	0	0	0	0	0	0	28.3	70.97	35.1	42.1
0600	83	0	0	0	0	0	14	41	21	5	2	0	0	0	0	0	0	29.4	79.52	33.8	38.6
0700	270	0	0	1	3	26	72	108	50	9	1	0	0	0	0	0	0	26.7	71.11	31.2	36.1
0800	404	22	48	11	9	48	121	116	27	2	0	0	0	0	0	0	0	24.5	60.40	24.6	33.0
0900	376	0	0	0	1	7	88	185	77	16	1	1	0	0	0	0	0	26.5	78.99	32.5	36.4
1000	266	0	0	0	4	11	60	104	71	15	1	0	0	0	0	0	0	27.3	74.81	32.5	37.1
1100	237	0	1	3	10	53	51	70	39	10	0	0	0	0	0	0	0	26.6	55.70	29.4	35.8
1200	225	0	0	1	0	1	44	107	58	12	2	0	0	0	0	0	0	27.7	80.00	33.4	37.6
1300	233	0	2	1	1	7	55	107	53	7	0	0	0	0	0	0	0	27.6	80.26	32.1	36.7
1400	259	0	0	1	1	3	62	107	69	14	1	1	0	0	0	0	0	28.0	75.68	33.1	37.8
1500	352	0	1	1	1	12	87	179	56	13	2	0	0	0	0	0	0	26.8	78.98	32.1	36.4
1600	457	24	53	31	15	20	121	151	38	2	0	2	0	0	0	0	0	25.6	61.49	24.9	33.5
1700	389	47	54	13	22	34	94	93	28	4	0	0	0	0	0	0	0	25.4	48.84	22.4	33.1
1800	380	39	66	10	11	22	73	109	42	8	0	0	0	0	0	0	0	26.3	48.95	23.4	34.8
1900	273	0	0	0	1	6	76	116	62	11	1	0	0	0	0	0	0	27.2	77.66	32.5	37.0
2000	185	0	0	0	0	4	47	70	53	6	3	2	0	0	0	0	0	27.5	76.76	33.3	37.7
2100	124	0	0	0	0	2	32	59	22	6	3	0	0	0	0	0	0	27.5	77.42	32.9	38.4
2200	40	0	0	0	0	1	1	18	15	3	1	1	0	0	0	0	0	29.9	82.50	35.2	39.5
2300	10	0	0	0	0	0	2	3	3	1	1	0	0	0	0	0	0	28.3	80.00	35.2	-
07-19	**3848**	**132**	**225**	**73**	**78**	**244**	**928**	**1436**	**608**	**112**	**8**	**4**	**0**	**0**	**0**	**0**	**0**	**26.7**	**64.48**	**28.6**	**35.8**
06-22	**4513**	**132**	**225**	**73**	**79**	**256**	**1097**	**1722**	**766**	**140**	**17**	**6**	**0**	**0**	**0**	**0**	**0**	**27.3**	**65.88**	**29.2**	**36.0**
06-00	**4563**	**132**	**225**	**73**	**79**	**257**	**1100**	**1743**	**784**	**144**	**19**	**7**	**0**	**0**	**0**	**0**	**0**	**27.4**	**65.86**	**29.3**	**36.1**
00-00	**4619**	**132**	**225**	**74**	**79**	**258**	**1110**	**1763**	**797**	**151**	**22**	**7**	**1**	**0**	**0**	**0**	**0**	**27.4**	**65.90**	**29.4**	**36.1**

Peak step 16:00 (457) **AM Peak step** 8:00 (404) **PM Peak step** 16:00 (457)

*** Grand Total**

Time	Total	Vbin	Vbin	Vbin	Vbin	Vbin	Vbin	Vbin	Vbin	Vbin	Vbin	Vbin	Vbin	Vbin	Vbin	Vbin	Vbin	vPace	Pace%	Mean	Vpp
<--		0	5	10	15	20	25	30	35	40	45	50	55	60	65	70	75	10	10		85
		5	10	15	20	25	30	35	40	45	50	55	60	65	70	75	100				
--	**4619**	**132**	**225**	**74**	**79**	**258**	**1110**	**1763**	**797**	**151**	**22**	**7**	**1**	**0**	**0**	**0**	**0**	**27.4**	**65.90**	**29.4**	**36.1**

Traffic Data Service -- San Jose, CA
Speed Report

CustomList-3224 -- English (ENU)

Datasets:

Site: **[3] CUESTA DR BT CLARK AVE AND SPRINGER RD**
Data type: Axle sensors - Paired (Class/Speed/Count)

Profile:

Included classes: 1, 2, 3, 4, 5, 6, 7, 8, 9, 10, 11, 12, 13
Speed range: 0 - 100 mph.
Direction: West (bound), P = East, Lane = 0-16
Name: Default Profile
Scheme: Vehicle classification (Scheme F)
Units: Non metric (ft, mi, ft/s, mph, lb, ton)

Column Legend:

0 [Time] 24-hour time (0000 - 2359)
1 [Total] Number in time step
2 [Vbin] Speed bin totals
3 [vPace] Speed at start of pace
4 [Pace%] Percent in pace
5 [Mean] Average speed
6 [Vpp] Percentile speed

* Tuesday, March 12, 2019

Time	Total	Vbin	Vbin	Vbin	Vbin	Vbin	Vbin	Vbin	Vbin	Vbin	Vbin	Vbin	Vbin	Vbin	Vbin	Vbin	Vbin	vPace	Pace%	Mean	Vpp
<--		0	5	10	15	20	25	30	35	40	45	50	55	60	65	70	75	10	10		85
		5	10	15	20	25	30	35	40	45	50	55	60	65	70	75	100				
0000	9	0	0	0	0	1	2	5	0	0	1	0	0	0	0	0	0	24.0	77.78	32.0	-
0100	3	0	0	0	0	0	0	1	1	1	0	0	0	0	0	0	0	34.3	100.0	39.3	-
0200	1	0	0	0	0	0	1	0	0	0	0	0	0	0	0	0	0	19.5	100.0	29.3	-
0300	3	0	0	0	0	0	0	0	2	1	0	0	0	0	0	0	0	30.9	100.0	38.4	-
0400	8	0	0	0	1	0	5	0	2	0	0	0	0	0	0	0	0	19.8	62.50	28.7	-
0500	51	0	0	1	0	1	10	20	11	5	1	1	1	0	0	0	0	27.5	74.51	34.0	40.6
0600	107	0	0	1	5	6	44	40	9	1	1	0	0	0	0	0	0	24.7	79.44	29.9	34.0
0700	327	0	0	0	3	14	121	146	37	6	0	0	0	0	0	0	0	25.5	81.96	30.8	34.7
0800	423	0	4	4	6	30	154	163	57	5	0	0	0	0	0	0	0	25.2	75.41	30.0	35.0
0900	407	0	0	3	0	20	122	195	54	10	3	0	0	0	0	0	0	26.7	80.10	31.3	35.2
1000	413	0	0	2	1	25	128	165	86	6	0	0	0	0	0	0	0	26.3	72.64	31.4	36.0
1100	291	0	2	0	7	35	105	111	28	2	1	0	0	0	0	0	0	24.8	74.91	29.6	34.0
1200	245	0	0	2	1	26	96	86	31	3	0	0	0	0	0	0	0	25.4	76.73	30.0	34.5
1300	237	0	2	2	1	10	83	105	31	3	0	0	0	0	0	0	0	24.9	79.32	30.8	34.9
1400	244	0	0	0	1	7	75	117	34	9	1	0	0	0	0	0	0	26.3	83.61	31.7	35.5
1500	260	0	1	3	0	13	77	120	40	6	0	0	0	0	0	0	0	25.5	76.15	31.1	35.5
1600	278	1	3	0	4	16	87	112	49	4	0	2	0	0	0	0	0	26.3	76.62	31.0	35.5
1700	296	1	3	1	3	13	98	130	43	4	0	0	0	0	0	0	0	26.1	79.39	30.8	35.2
1800	291	2	3	0	3	20	104	126	28	5	0	0	0	0	0	0	0	24.8	79.73	30.1	34.1
1900	225	0	0	2	0	9	97	95	21	1	0	0	0	0	0	0	0	25.6	87.11	30.4	34.1
2000	133	0	0	0	1	5	53	52	19	2	1	0	0	0	0	0	0	26.2	81.20	30.8	35.3
2100	102	0	0	0	4	5	48	26	17	2	0	0	0	0	0	0	0	25.3	74.51	30.0	36.1
2200	44	0	0	1	1	2	15	18	4	3	0	0	0	0	0	0	0	26.8	81.82	31.1	35.1
2300	14	0	0	1	0	0	4	5	3	1	0	0	0	0	0	0	0	28.6	78.57	31.5	38.3
07-19	**3712**	**4**	**18**	**17**	**30**	**229**	**1250**	**1576**	**518**	**63**	**5**	**2**	**0**	**0**	**0**	**0**	**0**	**25.6**	**76.64**	**30.7**	**35.1**
06-22	**4279**	**4**	**18**	**20**	**40**	**254**	**1492**	**1789**	**584**	**69**	**7**	**2**	**0**	**0**	**0**	**0**	**0**	**25.6**	**77.00**	**30.7**	**35.1**
06-00	**4337**	**4**	**18**	**22**	**41**	**256**	**1511**	**1812**	**591**	**73**	**7**	**2**	**0**	**0**	**0**	**0**	**0**	**25.6**	**77.01**	**30.7**	**35.1**
00-00	**4412**	**4**	**18**	**23**	**42**	**258**	**1529**	**1838**	**607**	**80**	**9**	**3**	**1**	**0**	**0**	**0**	**0**	**25.6**	**76.72**	**30.7**	**35.1**

Peak step 8:00 (423) **AM Peak step** 8:00 (423) **PM Peak step** 17:00 (296)

* Grand Total

Time	Total	Vbin	Vbin	Vbin	Vbin	Vbin	Vbin	Vbin	Vbin	Vbin	Vbin	Vbin	Vbin	Vbin	Vbin	Vbin	Vbin	vPace	Pace%	Mean	Vpp
<--		0	5	10	15	20	25	30	35	40	45	50	55	60	65	70	75	10	10		85
		5	10	15	20	25	30	35	40	45	50	55	60	65	70	75	100				
--	**4412**	**4**	**18**	**23**	**42**	**258**	**1529**	**1838**	**607**	**80**	**9**	**3**	**1**	**0**	**0**	**0**	**0**	**25.6**	**76.72**	**30.7**	**35.1**

Traffic Data Service -- San Jose, CA
Speed Report

CustomList-3223 -- English (ENU)

Datasets:
Site: **[2] CUESTA DR E OF ARBOLEDA DR**
Data type: Axle sensors - Paired (Class/Speed/Count)

Profile:
Included classes: 1, 2, 3, 4, 5, 6, 7, 8, 9, 10, 11, 12, 13
Speed range: 0 - 100 mph.
Direction: East (bound), P = East, Lane = 0-16
Name: Default Profile
Scheme: Vehicle classification (Scheme F)
Units: Non metric (ft, mi, ft/s, mph, lb, ton)

Column Legend:
0 [Time] 24-hour time (0000 - 2359)
1 [Total] Number in time step
2 [Vbin] Speed bin totals
3 [vPace] Speed at start of pace
4 [Pace%] Percent in pace
5 [Mean] Average speed
6 [Vpp] Percentile speed

*** Tuesday, March 12, 2019**

Time	Total	Vbin	Vbin	Vbin	Vbin	Vbin	Vbin	Vbin	Vbin	Vbin	Vbin	Vbin	Vbin	Vbin	Vbin	Vbin	Vbin	vPace	Pace%	Mean	Vpp
<--		0	5	10	15	20	25	30	35	40	45	50	55	60	65	70	75	10	10		85
		5	10	15	20	25	30	35	40	45	50	55	60	65	70	75	100				
0000	8	0	0	0	1	0	2	2	1	2	0	0	0	0	0	0	0	28.0	62.50	32.9	-
0100	5	0	0	0	0	0	1	1	1	2	0	0	0	0	0	0	0	25.8	60.00	36.3	-
0200	0	0	0	0	0	0	0	0	0	0	0	0	0	0	0	0	0	-	-	-	-
0300	1	0	0	0	0	0	0	1	0	0	0	0	0	0	0	0	0	20.8	100.0	30.7	-
0400	9	0	0	0	0	1	2	4	1	0	1	0	0	0	0	0	0	24.9	66.67	32.2	-
0500	22	0	0	0	0	0	5	10	5	2	0	0	0	0	0	0	0	28.0	86.36	33.7	38.7
0600	67	0	0	0	0	4	17	28	15	2	1	0	0	0	0	0	0	26.3	71.64	32.6	38.9
0700	255	0	0	2	2	25	99	101	23	3	0	0	0	0	0	0	0	24.7	78.04	30.0	34.4
0800	409	0	0	1	2	46	193	127	33	7	0	0	0	0	0	0	0	24.6	79.95	29.6	34.2
0900	336	0	0	0	0	39	96	148	51	2	0	0	0	0	0	0	0	26.1	75.60	30.7	35.1
1000	246	0	0	1	2	20	116	88	19	0	0	0	0	0	0	0	0	24.7	82.93	29.5	33.7
1100	226	0	0	1	0	32	93	80	19	1	0	0	0	0	0	0	0	24.7	77.43	29.3	33.6
1200	219	0	0	0	7	16	76	84	32	4	0	0	0	0	0	0	0	25.8	78.08	30.3	35.1
1300	216	0	0	0	6	22	96	70	20	2	0	0	0	0	0	0	0	25.4	77.31	29.5	34.2
1400	277	0	0	0	0	18	103	111	37	7	1	0	0	0	0	0	0	26.7	79.06	31.0	35.6
1500	375	0	0	0	7	27	144	147	44	6	0	0	0	0	0	0	0	25.7	77.87	30.4	34.7
1600	497	0	0	0	4	33	201	206	47	5	1	0	0	0	0	0	0	24.7	82.49	30.3	34.1
1700	490	0	0	0	2	60	221	166	37	4	0	0	0	0	0	0	0	24.3	82.45	29.4	33.2
1800	438	0	0	1	1	45	168	173	44	6	0	0	0	0	0	0	0	25.3	78.77	30.2	34.4
1900	272	0	0	0	0	16	101	107	40	8	0	0	0	0	0	0	0	25.7	77.57	31.1	35.5
2000	198	0	0	0	1	6	70	88	25	7	1	0	0	0	0	0	0	25.6	82.32	31.5	35.2
2100	121	0	0	0	1	4	47	38	23	7	1	0	0	0	0	0	0	24.8	71.07	31.8	37.4
2200	50	0	0	1	0	1	12	20	10	3	2	1	0	0	0	0	0	27.0	74.00	33.2	38.8
2300	10	0	0	0	0	0	5	2	2	1	0	0	0	0	0	0	0	24.3	70.00	32.7	-
07-19	**3984**	**0**	**0**	**6**	**33**	**383**	**1606**	**1501**	**406**	**47**	**2**	**0**	**0**	**0**	**0**	**0**	**0**	**25.2**	**77.96**	**30.0**	**34.3**
06-22	**4642**	**0**	**0**	**6**	**35**	**413**	**1841**	**1762**	**509**	**71**	**5**	**0**	**0**	**0**	**0**	**0**	**0**	**25.4**	**77.64**	**30.2**	**34.6**
06-00	**4702**	**0**	**0**	**7**	**35**	**414**	**1858**	**1784**	**521**	**75**	**7**	**1**	**0**	**0**	**0**	**0**	**0**	**25.4**	**77.48**	**30.3**	**34.6**
00-00	**4747**	**0**	**0**	**7**	**36**	**415**	**1868**	**1802**	**529**	**81**	**8**	**1**	**0**	**0**	**0**	**0**	**0**	**25.4**	**77.35**	**30.3**	**34.6**

Peak step 16:00 (497) **AM Peak step** 8:00 (409) **PM Peak step** 16:00 (497)

*** Grand Total**

Time	Total	Vbin	Vbin	Vbin	Vbin	Vbin	Vbin	Vbin	Vbin	Vbin	Vbin	Vbin	Vbin	Vbin	Vbin	Vbin	Vbin	vPace	Pace%	Mean	Vpp
<--		0	5	10	15	20	25	30	35	40	45	50	55	60	65	70	75	10	10		85
		5	10	15	20	25	30	35	40	45	50	55	60	65	70	75	100				
--	**4747**	**0**	**0**	**7**	**36**	**415**	**1868**	**1802**	**529**	**81**	**8**	**1**	**0**	**0**	**0**	**0**	**0**	**25.4**	**77.35**	**30.3**	**34.6**

Traffic Data Service -- San Jose, CA
Speed Report

CustomList-3222 -- English (ENU)

Datasets:
Site: **[2] CUESTA DR E OF ARBOLEDA DR**
Data type: Axle sensors - Paired (Class/Speed/Count)

Profile:
Included classes: 1, 2, 3, 4, 5, 6, 7, 8, 9, 10, 11, 12, 13
Speed range: 0 - 100 mph.
Direction: West (bound), P = East, Lane = 0-16
Name: Default Profile
Scheme: Vehicle classification (Scheme F)
Units: Non metric (ft, mi, ft/s, mph, lb, ton)

Column Legend:
0 [Time] 24-hour time (0000 - 2359)
1 [Total] Number in time step
2 [Vbin] Speed bin totals
3 [vPace] Speed at start of pace
4 [Pace%] Percent in pace
5 [Mean] Average speed
6 [Vpp] Percentile speed

*** Tuesday, March 12, 2019**

Time	Total	Vbin	Vbin	Vbin	Vbin	Vbin	Vbin	Vbin	Vbin	Vbin	Vbin	Vbin	Vbin	Vbin	Vbin	Vbin	Vbin	vPace	Pace%	Mean	Vpp
<--		0	5	10	15	20	25	30	35	40	45	50	55	60	65	70	75	10	10		85
		5	10	15	20	25	30	35	40	45	50	55	60	65	70	75	100				
0000	8	0	0	0	0	0	4	3	1	0	0	0	0	0	0	0	0	24.9	87.50	29.7	-
0100	2	0	0	0	0	0	0	1	1	0	0	0	0	0	0	0	0	27.8	100.0	36.3	-
0200	1	0	0	0	0	0	1	0	0	0	0	0	0	0	0	0	0	19.6	100.0	29.4	-
0300	3	0	0	0	0	0	0	0	1	2	0	0	0	0	0	0	0	33.6	100.0	40.5	-
0400	8	0	0	0	0	1	3	4	0	0	0	0	0	0	0	0	0	23.5	87.50	30.2	-
0500	51	0	0	2	0	4	13	15	11	3	3	0	0	0	0	0	0	28.2	66.67	32.3	39.2
0600	95	0	0	0	1	5	43	35	9	2	0	0	0	0	0	0	0	25.2	83.16	30.3	34.4
0700	337	0	0	2	1	16	149	136	29	4	0	0	0	0	0	0	0	25.8	84.57	30.1	33.9
0800	488	0	0	3	8	31	204	187	51	3	1	0	0	0	0	0	0	25.2	80.12	30.0	34.3
0900	448	0	0	3	3	31	174	193	41	3	0	0	0	0	0	0	0	24.7	82.37	30.2	34.1
1000	442	0	5	12	29	62	187	122	25	0	0	0	0	0	0	0	0	24.4	71.72	27.4	32.4
1100	269	0	1	0	3	29	114	105	13	4	0	0	0	0	0	0	0	24.6	82.53	29.4	33.2
1200	243	0	0	0	3	33	108	71	23	4	1	0	0	0	0	0	0	24.5	75.31	29.3	34.0
1300	219	0	1	0	1	19	87	84	24	3	0	0	0	0	0	0	0	25.7	79.00	30.2	34.2
1400	249	0	0	0	2	9	119	97	18	4	0	0	0	0	0	0	0	24.8	87.15	30.1	33.6
1500	265	0	1	1	1	14	101	110	36	1	0	0	0	0	0	0	0	25.8	83.40	30.6	34.8
1600	272	0	0	3	1	5	81	144	31	6	1	0	0	0	0	0	0	25.1	82.72	31.3	34.9
1700	311	0	1	2	0	6	99	152	47	4	0	0	0	0	0	0	0	25.8	85.21	31.3	35.3
1800	297	0	0	0	0	19	117	123	36	1	1	0	0	0	0	0	0	25.5	81.82	30.6	34.7
1900	194	0	0	1	1	10	84	79	15	3	1	0	0	0	0	0	0	25.3	85.05	30.2	34.3
2000	113	0	0	0	0	7	49	45	10	2	0	0	0	0	0	0	0	24.4	84.07	30.2	34.1
2100	80	0	0	0	0	7	37	29	7	0	0	0	0	0	0	0	0	24.2	85.00	29.6	33.4
2200	32	0	0	0	0	2	13	11	5	1	0	0	0	0	0	0	0	26.4	84.38	31.1	36.2
2300	12	0	0	0	1	2	1	5	2	1	0	0	0	0	0	0	0	27.0	66.67	30.2	37.0
07-19	**3840**	**0**	**9**	**26**	**52**	**274**	**1540**	**1524**	**374**	**37**	**4**	**0**	**0**	**0**	**0**	**0**	**0**	**25.1**	**79.61**	**30.0**	**34.2**
06-22	**4322**	**0**	**9**	**27**	**54**	**303**	**1753**	**1712**	**415**	**44**	**5**	**0**	**0**	**0**	**0**	**0**	**0**	**25.1**	**79.99**	**30.0**	**34.1**
06-00	**4366**	**0**	**9**	**27**	**55**	**307**	**1767**	**1728**	**422**	**46**	**5**	**0**	**0**	**0**	**0**	**0**	**0**	**25.1**	**79.87**	**30.0**	**34.2**
00-00	**4439**	**0**	**9**	**29**	**55**	**312**	**1788**	**1751**	**436**	**51**	**8**	**0**	**0**	**0**	**0**	**0**	**0**	**25.1**	**79.54**	**30.0**	**34.2**

Peak step 8:00 (488) **AM Peak step** 8:00 (488) **PM Peak step** 17:00 (311)

*** Grand Total**

Time	Total	Vbin	Vbin	Vbin	Vbin	Vbin	Vbin	Vbin	Vbin	Vbin	Vbin	Vbin	Vbin	Vbin	Vbin	Vbin	Vbin	vPace	Pace%	Mean	Vpp
<--		0	5	10	15	20	25	30	35	40	45	50	55	60	65	70	75	10	10		85
		5	10	15	20	25	30	35	40	45	50	55	60	65	70	75	100				
--	**4439**	**0**	**9**	**29**	**55**	**312**	**1788**	**1751**	**436**	**51**	**8**	**0**	**0**	**0**	**0**	**0**	**0**	**25.1**	**79.54**	**30.0**	**34.2**

Traffic Data Service -- San Jose, CA
Speed Report

CustomList-3221 -- English (ENU)

Datasets:
Site: **[1] PACO DR BT CLARKE AVE AND SPRINGER RD**
Data type: Axle sensors - Paired (Class/Speed/Count)

Profile:
Included classes: 1, 2, 3, 4, 5, 6, 7, 8, 9, 10, 11, 12, 13
Speed range: 0 - 100 mph.
Direction: East (bound), P = East, Lane = 0-16
Name: Default Profile
Scheme: Vehicle classification (Scheme F)
Units: Non metric (ft, mi, ft/s, mph, lb, ton)

Column Legend:
0 [Time] 24-hour time (0000 - 2359)
1 [Total] Number in time step
2 [Vbin] Speed bin totals
3 [vPace] Speed at start of pace
4 [Pace%] Percent in pace
5 [Mean] Average speed
6 [Vpp] Percentile speed

*** Tuesday, March 12, 2019**

Time	Total	Vbin	Vbin	Vbin	Vbin	Vbin	Vbin	Vbin	Vbin	Vbin	Vbin	Vbin	Vbin	Vbin	Vbin	Vbin	Vbin	vPace	Pace%	Mean	Vpp
<--		0	5	10	15	20	25	30	35	40	45	50	55	60	65	70	75	10	10		85
		5	10	15	20	25	30	35	40	45	50	55	60	65	70	75	100				
0000	0	0	0	0	0	0	0	0	0	0	0	0	0	0	0	0	0	-	-	-	-
0100	0	0	0	0	0	0	0	0	0	0	0	0	0	0	0	0	0	-	-	-	-
0200	0	0	0	0	0	0	0	0	0	0	0	0	0	0	0	0	0	-	-	-	-
0300	0	0	0	0	0	0	0	0	0	0	0	0	0	0	0	0	0	-	-	-	-
0400	4	0	0	0	2	1	1	0	0	0	0	0	0	0	0	0	0	18.0	100.0	22.2	-
0500	1	0	0	0	0	1	0	0	0	0	0	0	0	0	0	0	0	13.8	100.0	23.6	-
0600	2	0	0	0	0	0	2	0	0	0	0	0	0	0	0	0	0	18.3	100.0	27.5	-
0700	14	0	0	2	1	2	5	4	0	0	0	0	0	0	0	0	0	24.9	64.29	24.9	33.8
0800	33	0	0	0	2	6	12	13	0	0	0	0	0	0	0	0	0	23.8	84.85	28.2	31.8
0900	11	0	1	1	0	2	3	1	3	0	0	0	0	0	0	0	0	26.2	54.55	26.5	35.7
1000	10	0	0	0	0	5	2	3	0	0	0	0	0	0	0	0	0	20.4	80.00	26.8	-
1100	17	0	1	2	3	2	5	4	0	0	0	0	0	0	0	0	0	22.8	64.71	23.8	31.1
1200	15	0	0	1	4	5	3	2	0	0	0	0	0	0	0	0	0	16.7	66.67	23.2	30.6
1300	10	0	1	1	3	0	3	2	0	0	0	0	0	0	0	0	0	15.7	50.00	21.8	-
1400	15	0	2	0	1	0	5	7	0	0	0	0	0	0	0	0	0	24.3	80.00	26.4	33.4
1500	19	0	0	0	2	3	6	3	4	1	0	0	0	0	0	0	0	23.5	63.16	29.4	38.6
1600	31	0	0	1	0	7	15	4	3	1	0	0	0	0	0	0	0	22.9	74.19	28.3	34.9
1700	33	0	0	1	7	5	12	6	2	0	0	0	0	0	0	0	0	19.5	57.58	25.7	33.1
1800	23	0	0	0	3	3	12	4	1	0	0	0	0	0	0	0	0	25.3	73.91	26.9	33.3
1900	8	0	0	0	0	2	5	1	0	0	0	0	0	0	0	0	0	19.8	87.50	26.7	-
2000	9	0	0	0	1	1	3	1	2	1	0	0	0	0	0	0	0	25.7	55.56	30.2	-
2100	3	0	0	0	1	0	0	1	1	0	0	0	0	0	0	0	0	27.3	66.67	29.2	-
2200	3	0	1	0	0	1	0	0	1	0	0	0	0	0	0	0	0	0.0	33.33	23.4	-
2300	1	0	0	0	0	0	1	0	0	0	0	0	0	0	0	0	0	15.2	100.0	25.0	-
07-19	**231**	**0**	**5**	**9**	**26**	**40**	**83**	**53**	**13**	**2**	**0**	**0**	**0**	**0**	**0**	**0**	**0**	**23.8**	**63.20**	**26.4**	**33.4**
06-22	**253**	**0**	**5**	**9**	**28**	**43**	**93**	**56**	**16**	**3**	**0**	**0**	**0**	**0**	**0**	**0**	**0**	**23.8**	**62.45**	**26.6**	**33.4**
06-00	**257**	**0**	**6**	**9**	**28**	**44**	**94**	**56**	**17**	**3**	**0**	**0**	**0**	**0**	**0**	**0**	**0**	**23.8**	**62.26**	**26.6**	**33.5**
00-00	**262**	**0**	**6**	**9**	**30**	**46**	**95**	**56**	**17**	**3**	**0**	**0**	**0**	**0**	**0**	**0**	**0**	**23.8**	**61.45**	**26.5**	**33.4**

Peak step 8:00 (33) **AM Peak step** 8:00 (33) **PM Peak step** 17:00 (33)

*** Grand Total**

Time	Total	Vbin	Vbin	Vbin	Vbin	Vbin	Vbin	Vbin	Vbin	Vbin	Vbin	Vbin	Vbin	Vbin	Vbin	Vbin	Vbin	vPace	Pace%	Mean	Vpp
<--		0	5	10	15	20	25	30	35	40	45	50	55	60	65	70	75	10	10		85
		5	10	15	20	25	30	35	40	45	50	55	60	65	70	75	100				
--	262	0	6	9	30	46	95	56	17	3	0	0	0	0	0	0	0	23.8	61.45	26.5	33.4

Traffic Data Service -- San Jose, CA
Speed Report

CustomList-3220 -- English (ENU)

Datasets:
Site: **[1] PACO DR BT CLARKE AVE AND SPRINGER RD**
Data type: Axle sensors - Paired (Class/Speed/Count)

Profile:
Included classes: 1, 2, 3, 4, 5, 6, 7, 8, 9, 10, 11, 12, 13
Speed range: 0 - 100 mph.
Direction: West (bound), P = East, Lane = 0-16
Name: Default Profile
Scheme: Vehicle classification (Scheme F)
Units: Non metric (ft, mi, ft/s, mph, lb, ton)

Column Legend:
0 [Time] 24-hour time (0000 - 2359)
1 [Total] Number in time step
2 [Vbin] Speed bin totals
3 [vPace] Speed at start of pace
4 [Pace%] Percent in pace
5 [Mean] Average speed
6 [Vpp] Percentile speed

*** Tuesday, March 12, 2019**

Time	Total	Vbin	Vbin	Vbin	Vbin	Vbin	Vbin	Vbin	Vbin	Vbin	Vbin	Vbin	Vbin	Vbin	Vbin	Vbin	Vbin	vPace	Pace%	Mean	Vpp
<--		0	5	10	15	20	25	30	35	40	45	50	55	60	65	70	75	10	10		85
		5	10	15	20	25	30	35	40	45	50	55	60	65	70	75	100				
0000	0	0	0	0	0	0	0	0	0	0	0	0	0	0	0	0	0	-	-	-	-
0100	0	0	0	0	0	0	0	0	0	0	0	0	0	0	0	0	0	-	-	-	-
0200	0	0	0	0	0	0	0	0	0	0	0	0	0	0	0	0	0	-	-	-	-
0300	0	0	0	0	0	0	0	0	0	0	0	0	0	0	0	0	0	-	-	-	-
0400	0	0	0	0	0	0	0	0	0	0	0	0	0	0	0	0	0	-	-	-	-
0500	0	0	0	0	0	0	0	0	0	0	0	0	0	0	0	0	0	-	-	-	-
0600	4	0	0	0	0	1	2	0	1	0	0	0	0	0	0	0	0	17.9	75.00	28.2	-
0700	11	0	1	1	2	0	4	3	0	0	0	0	0	0	0	0	0	23.8	63.64	23.9	31.6
0800	30	0	2	0	4	6	11	6	1	0	0	0	0	0	0	0	0	20.8	63.33	25.3	31.7
0900	9	0	0	0	0	2	3	4	0	0	0	0	0	0	0	0	0	23.0	77.78	29.5	-
1000	13	0	0	2	0	6	3	2	0	0	0	0	0	0	0	0	0	18.2	69.23	23.4	31.2
1100	15	0	1	0	2	2	6	3	1	0	0	0	0	0	0	0	0	22.3	66.67	25.6	33.7
1200	10	0	1	4	1	0	2	2	0	0	0	0	0	0	0	0	0	8.7	60.00	18.8	-
1300	3	0	0	1	0	1	0	0	1	0	0	0	0	0	0	0	0	12.8	66.67	24.6	-
1400	11	0	0	2	2	0	3	3	1	0	0	0	0	0	0	0	0	26.1	63.64	25.2	33.5
1500	16	0	0	0	3	4	7	2	0	0	0	0	0	0	0	0	0	19.6	68.75	25.5	30.7
1600	9	0	0	0	1	2	5	1	0	0	0	0	0	0	0	0	0	20.1	77.78	26.3	-
1700	17	0	1	1	3	2	8	2	0	0	0	0	0	0	0	0	0	21.1	64.71	24.1	30.0
1800	11	0	0	0	1	5	4	1	0	0	0	0	0	0	0	0	0	18.3	90.91	25.0	28.8
1900	11	0	0	0	2	2	6	1	0	0	0	0	0	0	0	0	0	20.7	81.82	24.7	28.7
2000	6	0	0	1	3	0	1	1	0	0	0	0	0	0	0	0	0	9.8	66.67	21.3	-
2100	4	0	0	0	0	2	0	1	0	0	1	0	0	0	0	0	0	13.3	50.00	31.1	-
2200	0	0	0	0	0	0	0	0	0	0	0	0	0	0	0	0	0	-	-	-	-
2300	1	0	1	0	0	0	0	0	0	0	0	0	0	0	0	0	0	0.0	100.0	8.8	-
07-19	**155**	**0**	**6**	**11**	**19**	**30**	**56**	**29**	**4**	**0**	**0**	**0**	**0**	**0**	**0**	**0**	**0**	**21.4**	**60.65**	**24.8**	**31.3**
06-22	**180**	**0**	**6**	**12**	**24**	**35**	**65**	**32**	**5**	**0**	**1**	**0**	**0**	**0**	**0**	**0**	**0**	**22.0**	**60.56**	**24.9**	**31.4**
06-00	**181**	**0**	**7**	**12**	**24**	**35**	**65**	**32**	**5**	**0**	**1**	**0**	**0**	**0**	**0**	**0**	**0**	**22.0**	**60.22**	**24.8**	**31.4**
00-00	**181**	**0**	**7**	**12**	**24**	**35**	**65**	**32**	**5**	**0**	**1**	**0**	**0**	**0**	**0**	**0**	**0**	**22.0**	**60.22**	**24.8**	**31.4**

Peak step 8:00 (30) **AM Peak step** 8:00 (30) **PM Peak step** 17:00 (17)

*** Grand Total**

Time	Total	Vbin	Vbin	Vbin	Vbin	Vbin	Vbin	Vbin	Vbin	Vbin	Vbin	Vbin	Vbin	Vbin	Vbin	Vbin	Vbin	vPace	Pace%	Mean	Vpp
<--		0	5	10	15	20	25	30	35	40	45	50	55	60	65	70	75	10	10		85
		5	10	15	20	25	30	35	40	45	50	55	60	65	70	75	100				
--	181	0	7	12	24	35	65	32	5	0	1	0	0	0	0	0	0	22.0	60.22	24.8	31.4

Movement	EBL	EBT	EBR	WBL	WBT	WBR	NEL	NET	NER	SWL	SWT	SWR
Lane Configurations												
Traffic Volume (veh/h)	28	172	20	185	303	11	96	399	234	22	337	71
Future Volume (veh/h)	28	172	20	185	303	11	96	399	234	22	337	71
Number	7	4	14	3	8	18	5	2	12	1	6	16
Initial Q (Qb), veh	0	0	0	0	0	0	0	0	0	0	0	0
Ped-Bike Adj(A_pbT)	1.00		1.00	1.00		1.00	1.00		1.00	1.00		1.00
Parking Bus, Adj	1.00	1.00	1.00	1.00	1.00	1.00	1.00	1.00	1.00	1.00	1.00	1.00
Adj Sat Flow, veh/h/ln	1863	1863	1900	1863	1863	1900	1863	1863	1863	1863	1863	1863
Adj Flow Rate, veh/h	30	185	22	199	326	12	100	416	244	28	427	90
Adj No. of Lanes	1	1	0	1	1	0	1	1	1	1	1	1
Peak Hour Factor	0.93	0.93	0.93	0.93	0.93	0.93	0.96	0.96	0.96	0.79	0.79	0.79
Percent Heavy Veh, %	2	2	2	2	2	2	2	2	2	2	2	2
Cap, veh/h	436	654	78	538	714	26	355	745	633	335	745	633
Arrive On Green	0.40	0.40	0.40	0.40	0.40	0.40	0.40	0.40	0.40	0.40	0.40	0.40
Sat Flow, veh/h	1038	1634	194	1170	1785	66	881	1863	1583	771	1863	1583
Grp Volume(v), veh/h	30	0	207	199	0	338	100	416	244	28	427	90
Grp Sat Flow(s),veh/h/ln	1038	0	1828	1170	0	1851	881	1863	1583	771	1863	1583
Q Serve(g_s), s	1.0	0.0	3.4	6.2	0.0	6.0	4.5	7.8	4.9	1.3	8.0	1.6
Cycle Q Clear(g_c), s	7.0	0.0	3.4	9.7	0.0	6.0	12.5	7.8	4.9	9.1	8.0	1.6
Prop In Lane	1.00		0.11	1.00		0.04	1.00		1.00	1.00		1.00
Lane Grp Cap(c), veh/h	436	0	731	538	0	740	355	745	633	335	745	633
V/C Ratio(X)	0.07	0.00	0.28	0.37	0.00	0.46	0.28	0.56	0.39	0.08	0.57	0.14
Avail Cap(c_a), veh/h	436	0	731	538	0	740	355	745	633	335	745	633
HCM Platoon Ratio	1.00	1.00	1.00	1.00	1.00	1.00	1.00	1.00	1.00	1.00	1.00	1.00
Upstream Filter(I)	1.00	0.00	1.00	1.00	0.00	1.00	1.00	1.00	1.00	1.00	1.00	1.00
Uniform Delay (d), s/veh	12.5	0.0	9.1	12.4	0.0	9.9	15.4	10.4	9.6	13.9	10.5	8.6
Incr Delay (d2), s/veh	0.3	0.0	1.0	1.9	0.0	2.0	2.0	3.0	1.8	0.5	3.2	0.5
Initial Q Delay(d3),s/veh	0.0	0.0	0.0	0.0	0.0	0.0	0.0	0.0	0.0	0.0	0.0	0.0
%ile BackOfQ(50%),veh/ln	0.3	0.0	1.9	2.3	0.0	3.4	1.3	4.6	2.4	0.3	4.7	0.8
LnGrp Delay(d),s/veh	12.8	0.0	10.1	14.4	0.0	11.9	17.4	13.4	11.3	14.4	13.7	9.1
LnGrp LOS	B		B	B		B	B	B	B	B	B	A
Approach Vol, veh/h		237			537			760			545	
Approach Delay, s/veh		10.4			12.8			13.3			13.0	
Approach LOS		B			B			B			B	

Timer	1	2	3	4	5	6	7	8
Assigned Phs		2		4		6		8
Phs Duration (G+Y+Rc), s		22.5		22.5		22.5		22.5
Change Period (Y+Rc), s		4.5		4.5		4.5		4.5
Max Green Setting (Gmax), s		18.0		18.0		18.0		18.0
Max Q Clear Time (g_c+I1), s		14.5		9.0		11.1		11.7
Green Ext Time (p_c), s		1.4		0.8		1.8		1.5

Intersection Summary	
HCM 2010 Ctrl Delay	12.8
HCM 2010 LOS	B

Intersection	
Int Delay, s/veh	0.3

Movement	EBT	EBR	WBL	WBT	NBL	NBR
Lane Configurations						
Traffic Vol, veh/h	405	42	2	475	12	5
Future Vol, veh/h	405	42	2	475	12	5
Conflicting Peds, #/hr	0	1	1	0	0	0
Sign Control	Free	Free	Free	Free	Stop	Stop
RT Channelized	-	None	-	None	-	None
Storage Length	-	-	-	-	0	-
Veh in Median Storage, #	0	-	-	0	0	-
Grade, %	0	-	-	0	0	-
Peak Hour Factor	95	95	95	95	95	95
Heavy Vehicles, %	2	2	2	2	2	2
Mvmt Flow	426	44	2	500	13	5

Major/Minor	Major1		Major2		Minor1	
Conflicting Flow All	0	0	471	0	953	449
Stage 1	-	-	-	-	449	-
Stage 2	-	-	-	-	504	-
Critical Hdwy	-	-	4.12	-	6.42	6.22
Critical Hdwy Stg 1	-	-	-	-	5.42	-
Critical Hdwy Stg 2	-	-	-	-	5.42	-
Follow-up Hdwy	-	-	2.218	-	3.518	3.318
Pot Cap-1 Maneuver	-	-	1091	-	287	610
Stage 1	-	-	-	-	643	-
Stage 2	-	-	-	-	607	-
Platoon blocked, %	-	-		-		
Mov Cap-1 Maneuver	-	-	1090	-	286	609
Mov Cap-2 Maneuver	-	-	-	-	286	-
Stage 1	-	-	-	-	642	-
Stage 2	-	-	-	-	605	-

Approach	EB	WB	NB
HCM Control Delay, s	0	0	16.2
HCM LOS			C

Minor Lane/Major Mvmt	NBLn1	EBT	EBR	WBL	WBT
Capacity (veh/h)	339	-	-	1090	-
HCM Lane V/C Ratio	0.053	-	-	0.002	-
HCM Control Delay (s)	16.2	-	-	8.3	0
HCM Lane LOS	C	-	-	A	A
HCM 95th %tile Q(veh)	0.2	-	-	0	-

Intersection	
Intersection Delay, s/veh	18.3
Intersection LOS	C

Movement	EBT	EBR	WBL	WBT	NBL	NBR
Lane Configurations						
Traffic Vol, veh/h	331	70	103	375	105	84
Future Vol, veh/h	331	70	103	375	105	84
Peak Hour Factor	0.93	0.93	0.93	0.93	0.93	0.93
Heavy Vehicles, %	2	2	2	2	2	2
Mvmt Flow	356	75	111	403	113	90
Number of Lanes	1	0	0	1	1	0

Approach	EB	WB	NB
Opposing Approach	WB	EB	
Opposing Lanes	1	1	0
Conflicting Approach Left		NB	EB
Conflicting Lanes Left	0	1	1
Conflicting Approach Right	NB		WB
Conflicting Lanes Right	1	0	1
HCM Control Delay	16.5	22.1	12.3
HCM LOS	C	C	B

Lane	NBLn1	EBLn1	WBLn1
Vol Left, %	56%	0%	22%
Vol Thru, %	0%	83%	78%
Vol Right, %	44%	17%	0%
Sign Control	Stop	Stop	Stop
Traffic Vol by Lane	189	401	478
LT Vol	105	0	103
Through Vol	0	331	375
RT Vol	84	70	0
Lane Flow Rate	203	431	514
Geometry Grp	1	1	1
Degree of Util (X)	0.343	0.622	0.746
Departure Headway (Hd)	6.08	5.194	5.225
Convergence, Y/N	Yes	Yes	Yes
Cap	589	694	694
Service Time	4.13	3.235	3.263
HCM Lane V/C Ratio	0.345	0.621	0.741
HCM Control Delay	12.3	16.5	22.1
HCM Lane LOS	B	C	C
HCM 95th-tile Q	1.5	4.4	6.7

Intersection	
Int Delay, s/veh	2.2

Movement	EBL	EBT	WBT	WBR	SBL	SBR
Lane Configurations						
Traffic Vol, veh/h	47	368	392	22	26	90
Future Vol, veh/h	47	368	392	22	26	90
Conflicting Peds, #/hr	0	0	0	0	0	7
Sign Control	Free	Free	Free	Free	Stop	Stop
RT Channelized	-	None	-	None	-	None
Storage Length	-	-	-	-	0	-
Veh in Median Storage, #	-	0	0	-	0	-
Grade, %	-	0	0	-	0	-
Peak Hour Factor	96	96	96	96	96	96
Heavy Vehicles, %	2	2	2	2	2	2
Mvmt Flow	49	383	408	23	27	94

Major/Minor	Major1		Major2		Minor2	
Conflicting Flow All	431	0	-	0	901	427
Stage 1	-	-	-	-	420	-
Stage 2	-	-	-	-	481	-
Critical Hdwy	4.12	-	-	-	6.42	6.22
Critical Hdwy Stg 1	-	-	-	-	5.42	-
Critical Hdwy Stg 2	-	-	-	-	5.42	-
Follow-up Hdwy	2.218	-	-	-	3.518	3.318
Pot Cap-1 Maneuver	1129	-	-	-	309	628
Stage 1	-	-	-	-	663	-
Stage 2	-	-	-	-	622	-
Platoon blocked, %		-	-	-		
Mov Cap-1 Maneuver	1129	-	-	-	292	624
Mov Cap-2 Maneuver	-	-	-	-	292	-
Stage 1	-	-	-	-	627	-
Stage 2	-	-	-	-	622	-

Approach	EB	WB	SB
HCM Control Delay, s	0.9	0	14.6
HCM LOS			B

Minor Lane/Major Mvmt	EBL	EBT	WBT	WBR	SBLn1
Capacity (veh/h)	1129	-	-	-	497
HCM Lane V/C Ratio	0.043	-	-	-	0.243
HCM Control Delay (s)	8.3	0	-	-	14.6
HCM Lane LOS	A	A	-	-	B
HCM 95th %tile Q(veh)	0.1	-	-	-	0.9

Intersection	
Intersection Delay, s/veh	102.2
Intersection LOS	F

Movement	EBL	EBT	EBR	WBL	WBT	WBR	NBL	NBT	NBR	SBL	SBT	SBR
Lane Configurations												
Traffic Vol, veh/h	36	341	26	71	342	30	29	325	198	95	247	41
Future Vol, veh/h	36	341	26	71	342	30	29	325	198	95	247	41
Peak Hour Factor	0.92	0.92	0.92	0.92	0.92	0.92	0.92	0.92	0.92	0.92	0.92	0.92
Heavy Vehicles, %	2	2	2	2	2	2	2	2	2	2	2	2
Mvmt Flow	39	371	28	77	372	33	32	353	215	103	268	45
Number of Lanes	0	1	1	1	1	0	1	1	1	1	1	0

Approach	EB	WB	NB	SB
Opposing Approach	WB	EB	SB	NB
Opposing Lanes	2	2	2	3
Conflicting Approach Left	SB	NB	EB	WB
Conflicting Lanes Left	2	3	2	2
Conflicting Approach Right	NB	SB	WB	EB
Conflicting Lanes Right	3	2	2	2
HCM Control Delay	158.8	131.1	66.4	60.8
HCM LOS	F	F	F	F

Lane	NBLn1	NBLn2	NBLn3	EBLn1	EBLn2	WBLn1	WBLn2	SBLn1	SBLn2
Vol Left, %	100%	0%	0%	10%	0%	100%	0%	100%	0%
Vol Thru, %	0%	100%	0%	90%	0%	0%	92%	0%	86%
Vol Right, %	0%	0%	100%	0%	100%	0%	8%	0%	14%
Sign Control	Stop	Stop	Stop	Stop	Stop	Stop	Stop	Stop	Stop
Traffic Vol by Lane	29	325	198	377	26	71	372	95	288
LT Vol	29	0	0	36	0	71	0	95	0
Through Vol	0	325	0	341	0	0	342	0	247
RT Vol	0	0	198	0	26	0	30	0	41
Lane Flow Rate	32	353	215	410	28	77	404	103	313
Geometry Grp	8	8	8	8	8	8	8	8	8
Degree of Util (X)	0.096	1.027	0.584	1.248	0.08	0.242	1.206	0.327	0.938
Departure Headway (Hd)	12.238	11.706	10.962	11.722	10.933	12.197	11.608	12.747	12.102
Convergence, Y/N	Yes	Yes	Yes	Yes	Yes	Yes	Yes	Yes	Yes
Cap	295	314	331	311	330	296	315	284	304
Service Time	9.938	9.406	8.662	9.422	8.633	9.897	9.308	10.447	9.802
HCM Lane V/C Ratio	0.108	1.124	0.65	1.318	0.085	0.26	1.283	0.363	1.03
HCM Control Delay	16.2	94.3	28	168.7	14.6	18.7	152.6	21.5	73.7
HCM Lane LOS	C	F	D	F	B	C	F	C	F
HCM 95th-tile Q	0.3	11.4	3.5	17.7	0.3	0.9	16.5	1.4	9.1

Intersection	
Int Delay, s/veh	1.8

Movement	EBL	EBT	EBR	WBL	WBT	WBR	NBL	NBT	NBR	SBL	SBT	SBR
Lane Configurations												
Traffic Vol, veh/h	5	5	24	14	3	12	1	168	7	6	162	6
Future Vol, veh/h	5	5	24	14	3	12	1	168	7	6	162	6
Conflicting Peds, #/hr	0	0	5	0	0	0	0	0	0	0	0	1
Sign Control	Stop	Stop	Stop	Stop	Stop	Stop	Free	Free	Free	Free	Free	Free
RT Channelized	-	-	None	-	-	None	-	-	None	-	-	None
Storage Length	-	-	-	-	-	-	-	-	-	-	-	-
Veh in Median Storage, #	-	0	-	-	0	-	-	0	-	-	0	-
Grade, %	-	0	-	-	0	-	-	0	-	-	0	-
Peak Hour Factor	80	80	80	80	80	80	80	80	80	80	80	80
Heavy Vehicles, %	2	2	2	2	2	2	2	2	2	2	2	2
Mvmt Flow	6	6	30	18	4	15	1	210	9	8	203	8

Major/Minor	Minor2			Minor1			Major1			Major2		
Conflicting Flow All	450	445	213	463	445	215	212	0	0	219	0	0
Stage 1	224	224	-	217	217	-	-	-	-	-	-	-
Stage 2	226	221	-	246	228	-	-	-	-	-	-	-
Critical Hdwy	7.12	6.52	6.22	7.12	6.52	6.22	4.12	-	-	4.12	-	-
Critical Hdwy Stg 1	6.12	5.52	-	6.12	5.52	-	-	-	-	-	-	-
Critical Hdwy Stg 2	6.12	5.52	-	6.12	5.52	-	-	-	-	-	-	-
Follow-up Hdwy	3.518	4.018	3.318	3.518	4.018	3.318	2.218	-	-	2.218	-	-
Pot Cap-1 Maneuver	519	508	827	509	508	825	1358	-	-	1350	-	-
Stage 1	779	718	-	785	723	-	-	-	-	-	-	-
Stage 2	777	720	-	758	715	-	-	-	-	-	-	-
Platoon blocked, %								-	-		-	-
Mov Cap-1 Maneuver	503	503	822	480	503	825	1357	-	-	1350	-	-
Mov Cap-2 Maneuver	503	503	-	480	503	-	-	-	-	-	-	-
Stage 1	777	712	-	784	722	-	-	-	-	-	-	-
Stage 2	758	719	-	715	709	-	-	-	-	-	-	-

Approach	EB	WB	NB	SB
HCM Control Delay, s	10.5	11.6	0	0.3
HCM LOS	B	B		

Minor Lane/Major Mvmt	NBL	NBT	NBR	EBLn1	WBLn1	SBL	SBT	SBR
Capacity (veh/h)	1357	-	-	693	584	1350	-	-
HCM Lane V/C Ratio	0.001	-	-	0.061	0.062	0.006	-	-
HCM Control Delay (s)	7.7	0	-	10.5	11.6	7.7	0	-
HCM Lane LOS	A	A	-	B	B	A	A	-
HCM 95th %tile Q(veh)	0	-	-	0.2	0.2	0	-	-

Intersection	
Int Delay, s/veh	1.4

Movement	EBL	EBR	NBL	NBT	SBT	SBR
Lane Configurations						
Traffic Vol, veh/h	43	11	12	529	301	23
Future Vol, veh/h	43	11	12	529	301	23
Conflicting Peds, #/hr	0	0	0	0	0	0
Sign Control	Stop	Stop	Free	Free	Free	Free
RT Channelized	-	None	-	None	-	None
Storage Length	0	-	-	-	-	-
Veh in Median Storage, #	0	-	-	0	0	-
Grade, %	0	-	-	0	0	-
Peak Hour Factor	80	80	95	95	80	80
Heavy Vehicles, %	2	2	2	2	2	2
Mvmt Flow	54	14	13	557	376	29

Major/Minor	Minor2		Major1		Major2	
Conflicting Flow All	974	391	405	0	-	0
Stage 1	391	-	-	-	-	-
Stage 2	583	-	-	-	-	-
Critical Hdwy	6.42	6.22	4.12	-	-	-
Critical Hdwy Stg 1	5.42	-	-	-	-	-
Critical Hdwy Stg 2	5.42	-	-	-	-	-
Follow-up Hdwy	3.518	3.318	2.218	-	-	-
Pot Cap-1 Maneuver	279	658	1154	-	-	-
Stage 1	683	-	-	-	-	-
Stage 2	558	-	-	-	-	-
Platoon blocked, %				-	-	-
Mov Cap-1 Maneuver	275	658	1154	-	-	-
Mov Cap-2 Maneuver	275	-	-	-	-	-
Stage 1	672	-	-	-	-	-
Stage 2	558	-	-	-	-	-

Approach	EB	NB	SB
HCM Control Delay, s	19.7	0.2	0
HCM LOS	C		

Minor Lane/Major Mvmt	NBL	NBT	EBLn1	SBT	SBR
Capacity (veh/h)	1154	-	312	-	-
HCM Lane V/C Ratio	0.011	-	0.216	-	-
HCM Control Delay (s)	8.2	0	19.7	-	-
HCM Lane LOS	A	A	C	-	-
HCM 95th %tile Q(veh)	0	-	0.8	-	-

Intersection	
Int Delay, s/veh	4

Movement	EBL	EBT	EBR	WBL	WBT	WBR	NBL	NBT	NBR	SBL	SBT	SBR
Lane Configurations												
Traffic Vol, veh/h	50	9	16	8	20	20	20	97	3	9	132	61
Future Vol, veh/h	50	9	16	8	20	20	20	97	3	9	132	61
Conflicting Peds, #/hr	0	0	12	0	0	1	0	0	1	0	0	21
Sign Control	Stop	Stop	Stop	Stop	Stop	Stop	Free	Free	Free	Free	Free	Free
RT Channelized	-	-	None	-	-	None	-	-	None	-	-	None
Storage Length	-	-	-	-	-	-	-	-	-	-	-	-
Veh in Median Storage, #	-	0	-	-	0	-	-	0	-	-	0	-
Grade, %	-	0	-	-	0	-	-	0	-	-	0	-
Peak Hour Factor	80	80	80	80	80	80	80	80	80	80	80	80
Heavy Vehicles, %	2	2	2	2	2	2	2	2	2	2	2	2
Mvmt Flow	63	11	20	10	25	25	25	121	4	11	165	76

Major/Minor	Minor2			Minor1			Major1			Major2		
Conflicting Flow All	445	422	236	427	458	125	262	0	0	126	0	0
Stage 1	246	246	-	174	174	-	-	-	-	-	-	-
Stage 2	199	176	-	253	284	-	-	-	-	-	-	-
Critical Hdwy	7.12	6.52	6.22	7.12	6.52	6.22	4.12	-	-	4.12	-	-
Critical Hdwy Stg 1	6.12	5.52	-	6.12	5.52	-	-	-	-	-	-	-
Critical Hdwy Stg 2	6.12	5.52	-	6.12	5.52	-	-	-	-	-	-	-
Follow-up Hdwy	3.518	4.018	3.318	3.518	4.018	3.318	2.218	-	-	2.218	-	-
Pot Cap-1 Maneuver	523	523	803	538	499	926	1302	-	-	1460	-	-
Stage 1	758	703	-	828	755	-	-	-	-	-	-	-
Stage 2	803	753	-	751	676	-	-	-	-	-	-	-
Platoon blocked, %								-	-		-	-
Mov Cap-1 Maneuver	468	497	778	497	474	924	1276	-	-	1459	-	-
Mov Cap-2 Maneuver	468	497	-	497	474	-	-	-	-	-	-	-
Stage 1	727	683	-	810	738	-	-	-	-	-	-	-
Stage 2	738	736	-	705	656	-	-	-	-	-	-	-

Approach	EB	WB	NB	SB
HCM Control Delay, s	13.5	11.7	1.3	0.3
HCM LOS	B	B		

Minor Lane/Major Mvmt	NBL	NBT	NBR	EBLn1	WBLn1	SBL	SBT	SBR
Capacity (veh/h)	1276	-	-	515	600	1459	-	-
HCM Lane V/C Ratio	0.02	-	-	0.182	0.1	0.008	-	-
HCM Control Delay (s)	7.9	0	-	13.5	11.7	7.5	0	-
HCM Lane LOS	A	A	-	B	B	A	A	-
HCM 95th %tile Q(veh)	0.1	-	-	0.7	0.3	0	-	-

Movement	EBL	EBT	EBR	WBL	WBT	WBR	NEL	NET	NER	SWL	SWT	SWR
Lane Configurations												
Traffic Volume (veh/h)	36	307	17	127	167	14	64	323	220	30	376	66
Future Volume (veh/h)	36	307	17	127	167	14	64	323	220	30	376	66
Number	7	4	14	3	8	18	5	2	12	1	6	16
Initial Q (Qb), veh	0	0	0	0	0	0	0	0	0	0	0	0
Ped-Bike Adj(A_pbT)	1.00		1.00	1.00		1.00	1.00		1.00	1.00		1.00
Parking Bus, Adj	1.00	1.00	1.00	1.00	1.00	1.00	1.00	1.00	1.00	1.00	1.00	1.00
Adj Sat Flow, veh/h/ln	1863	1863	1900	1863	1863	1900	1863	1863	1863	1863	1863	1863
Adj Flow Rate, veh/h	42	357	20	153	201	17	71	359	244	32	404	71
Adj No. of Lanes	1	1	0	1	1	0	1	1	1	1	1	1
Peak Hour Factor	0.86	0.86	0.86	0.83	0.83	0.83	0.90	0.90	0.90	0.93	0.93	0.93
Percent Heavy Veh, %	2	2	2	2	2	2	2	2	2	2	2	2
Cap, veh/h	495	640	36	373	621	53	409	787	669	400	787	669
Arrive On Green	0.37	0.37	0.37	0.37	0.37	0.37	0.42	0.42	0.42	0.42	0.42	0.42
Sat Flow, veh/h	1158	1748	98	1002	1694	143	915	1863	1583	813	1863	1583
Grp Volume(v), veh/h	42	0	377	153	0	218	71	359	244	32	404	71
Grp Sat Flow(s),veh/h/ln	1158	0	1845	1002	0	1837	915	1863	1583	813	1863	1583
Q Serve(g_s), s	1.2	0.0	6.9	6.1	0.0	3.6	2.6	5.9	4.5	1.2	6.8	1.2
Cycle Q Clear(g_c), s	4.8	0.0	6.9	13.0	0.0	3.6	9.5	5.9	4.5	7.1	6.8	1.2
Prop In Lane	1.00		0.05	1.00		0.08	1.00		1.00	1.00		1.00
Lane Grp Cap(c), veh/h	495	0	676	373	0	673	409	787	669	400	787	669
V/C Ratio(X)	0.08	0.00	0.56	0.41	0.00	0.32	0.17	0.46	0.36	0.08	0.51	0.11
Avail Cap(c_a), veh/h	559	0	779	429	0	776	409	787	669	400	787	669
HCM Platoon Ratio	1.00	1.00	1.00	1.00	1.00	1.00	1.00	1.00	1.00	1.00	1.00	1.00
Upstream Filter(I)	1.00	0.00	1.00	1.00	0.00	1.00	1.00	1.00	1.00	1.00	1.00	1.00
Uniform Delay (d), s/veh	11.4	0.0	10.7	15.9	0.0	9.7	12.6	8.8	8.4	11.4	9.1	7.4
Incr Delay (d2), s/veh	0.1	0.0	0.7	0.7	0.0	0.3	0.9	1.9	1.5	0.4	2.4	0.3
Initial Q Delay(d3),s/veh	0.0	0.0	0.0	0.0	0.0	0.0	0.0	0.0	0.0	0.0	0.0	0.0
%ile BackOfQ(50%),veh/ln	0.4	0.0	3.6	1.7	0.0	1.9	0.8	3.4	2.3	0.3	4.0	0.6
LnGrp Delay(d),s/veh	11.5	0.0	11.5	16.7	0.0	10.0	13.5	10.7	9.9	11.7	11.5	7.8
LnGrp LOS	B		B	B		A	B	B	A	B	B	A
Approach Vol, veh/h		419			371			674			507	
Approach Delay, s/veh		11.5			12.7			10.7			11.0	
Approach LOS		B			B			B			B	

Timer	1	2	3	4	5	6	7	8
Assigned Phs		2		4		6		8
Phs Duration (G+Y+Rc), s		22.5		20.1		22.5		20.1
Change Period (Y+Rc), s		4.5		4.5		4.5		4.5
Max Green Setting (Gmax), s		18.0		18.0		18.0		18.0
Max Q Clear Time (g_c+I1), s		11.5		8.9		9.1		15.0
Green Ext Time (p_c), s		1.9		1.6		2.0		0.6

Intersection Summary	
HCM 2010 Ctrl Delay	11.3
HCM 2010 LOS	B

Intersection	
Int Delay, s/veh	0.2

Movement	EBT	EBR	WBL	WBT	NBL	NBR
Lane Configurations						
Traffic Vol, veh/h	491	33	2	268	8	3
Future Vol, veh/h	491	33	2	268	8	3
Conflicting Peds, #/hr	0	0	0	0	0	1
Sign Control	Free	Free	Free	Free	Stop	Stop
RT Channelized	-	None	-	None	-	None
Storage Length	-	-	-	-	0	-
Veh in Median Storage, #	0	-	-	0	0	-
Grade, %	0	-	-	0	0	-
Peak Hour Factor	93	93	93	93	93	93
Heavy Vehicles, %	2	2	2	2	2	2
Mvmt Flow	528	35	2	288	9	3

Major/Minor	Major1		Major2		Minor1	
Conflicting Flow All	0	0	563	0	838	547
Stage 1	-	-	-	-	546	-
Stage 2	-	-	-	-	292	-
Critical Hdwy	-	-	4.12	-	6.42	6.22
Critical Hdwy Stg 1	-	-	-	-	5.42	-
Critical Hdwy Stg 2	-	-	-	-	5.42	-
Follow-up Hdwy	-	-	2.218	-	3.518	3.318
Pot Cap-1 Maneuver	-	-	1008	-	336	537
Stage 1	-	-	-	-	580	-
Stage 2	-	-	-	-	758	-
Platoon blocked, %	-	-		-		
Mov Cap-1 Maneuver	-	-	1008	-	335	536
Mov Cap-2 Maneuver	-	-	-	-	335	-
Stage 1	-	-	-	-	580	-
Stage 2	-	-	-	-	756	-

Approach	EB	WB	NB
HCM Control Delay, s	0	0.1	15
HCM LOS			C

Minor Lane/Major Mvmt	NBLn1	EBT	EBR	WBL	WBT
Capacity (veh/h)	373	-	-	1008	-
HCM Lane V/C Ratio	0.032	-	-	0.002	-
HCM Control Delay (s)	15	-	-	8.6	0
HCM Lane LOS	C	-	-	A	A
HCM 95th %tile Q(veh)	0.1	-	-	0	-

Intersection	
Intersection Delay, s/veh	13.3
Intersection LOS	B

Movement	EBT	EBR	WBL	WBT	NBL	NBR
Lane Configurations						
Traffic Vol, veh/h	363	128	47	268	41	34
Future Vol, veh/h	363	128	47	268	41	34
Peak Hour Factor	0.93	0.93	0.93	0.93	0.93	0.93
Heavy Vehicles, %	2	2	2	2	2	2
Mvmt Flow	390	138	51	288	44	37
Number of Lanes	1	0	0	1	1	0

Approach	EB	WB	NB
Opposing Approach	WB	EB	
Opposing Lanes	1	1	0
Conflicting Approach Left		NB	EB
Conflicting Lanes Left	0	1	1
Conflicting Approach Right	NB		WB
Conflicting Lanes Right	1	0	1
HCM Control Delay	15	11.6	9.5
HCM LOS	B	B	A

Lane	NBLn1	EBLn1	WBLn1
Vol Left, %	55%	0%	15%
Vol Thru, %	0%	74%	85%
Vol Right, %	45%	26%	0%
Sign Control	Stop	Stop	Stop
Traffic Vol by Lane	75	491	315
LT Vol	41	0	47
Through Vol	0	363	268
RT Vol	34	128	0
Lane Flow Rate	81	528	339
Geometry Grp	1	1	1
Degree of Util (X)	0.126	0.642	0.445
Departure Headway (Hd)	5.617	4.38	4.734
Convergence, Y/N	Yes	Yes	Yes
Cap	633	824	759
Service Time	3.697	2.42	2.782
HCM Lane V/C Ratio	0.128	0.641	0.447
HCM Control Delay	9.5	15	11.6
HCM Lane LOS	A	B	B
HCM 95th-tile Q	0.4	4.8	2.3

Intersection	
Int Delay, s/veh	1.6

Movement	EBL	EBT	WBT	WBR	SBL	SBR
Lane Configurations						
Traffic Vol, veh/h	34	361	276	39	34	39
Future Vol, veh/h	34	361	276	39	34	39
Conflicting Peds, #/hr	0	0	0	0	0	3
Sign Control	Free	Free	Free	Free	Stop	Stop
RT Channelized	-	None	-	None	-	None
Storage Length	-	-	-	-	0	-
Veh in Median Storage, #	-	0	0	-	0	-
Grade, %	-	0	0	-	0	-
Peak Hour Factor	96	96	96	96	96	96
Heavy Vehicles, %	2	2	2	2	2	2
Mvmt Flow	35	376	288	41	35	41

Major/Minor	Major1		Major2		Minor2	
Conflicting Flow All	329	0	-	0	755	312
Stage 1	-	-	-	-	309	-
Stage 2	-	-	-	-	446	-
Critical Hdwy	4.12	-	-	-	6.42	6.22
Critical Hdwy Stg 1	-	-	-	-	5.42	-
Critical Hdwy Stg 2	-	-	-	-	5.42	-
Follow-up Hdwy	2.218	-	-	-	3.518	3.318
Pot Cap-1 Maneuver	1231	-	-	-	376	728
Stage 1	-	-	-	-	745	-
Stage 2	-	-	-	-	645	-
Platoon blocked, %		-	-	-		
Mov Cap-1 Maneuver	1231	-	-	-	362	726
Mov Cap-2 Maneuver	-	-	-	-	362	-
Stage 1	-	-	-	-	718	-
Stage 2	-	-	-	-	645	-

Approach	EB	WB	SB
HCM Control Delay, s	0.7	0	13.6
HCM LOS			B

Minor Lane/Major Mvmt	EBL	EBT	WBT	WBR	SBLn1
Capacity (veh/h)	1231	-	-	-	494
HCM Lane V/C Ratio	0.029	-	-	-	0.154
HCM Control Delay (s)	8	0	-	-	13.6
HCM Lane LOS	A	A	-	-	B
HCM 95th %tile Q(veh)	0.1	-	-	-	0.5

Intersection	
Intersection Delay, s/veh	65.5
Intersection LOS	F

Movement	EBL	EBT	EBR	WBL	WBT	WBR	NBL	NBT	NBR	SBL	SBT	SBR
Lane Configurations												
Traffic Vol, veh/h	20	339	23	140	274	63	23	197	128	123	339	8
Future Vol, veh/h	20	339	23	140	274	63	23	197	128	123	339	8
Peak Hour Factor	0.96	0.96	0.96	0.96	0.96	0.96	0.96	0.96	0.96	0.96	0.96	0.96
Heavy Vehicles, %	2	2	2	2	2	2	2	2	2	2	2	2
Mvmt Flow	21	353	24	146	285	66	24	205	133	128	353	8
Number of Lanes	0	1	1	1	1	0	1	1	1	1	1	0

Approach	EB	WB	NB	SB
Opposing Approach	WB	EB	SB	NB
Opposing Lanes	2	2	2	3
Conflicting Approach Left	SB	NB	EB	WB
Conflicting Lanes Left	2	3	2	2
Conflicting Approach Right	NB	SB	WB	EB
Conflicting Lanes Right	3	2	2	2
HCM Control Delay	103	60.6	25.3	69.8
HCM LOS	F	F	D	F

Lane	NBLn1	NBLn2	NBLn3	EBLn1	EBLn2	WBLn1	WBLn2	SBLn1	SBLn2
Vol Left, %	100%	0%	0%	6%	0%	100%	0%	100%	0%
Vol Thru, %	0%	100%	0%	94%	0%	0%	81%	0%	98%
Vol Right, %	0%	0%	100%	0%	100%	0%	19%	0%	2%
Sign Control	Stop	Stop	Stop	Stop	Stop	Stop	Stop	Stop	Stop
Traffic Vol by Lane	23	197	128	359	23	140	337	123	347
LT Vol	23	0	0	20	0	140	0	123	0
Through Vol	0	197	0	339	0	0	274	0	339
RT Vol	0	0	128	0	23	0	63	0	8
Lane Flow Rate	24	205	133	374	24	146	351	128	361
Geometry Grp	8	8	8	8	8	8	8	8	8
Degree of Util (X)	0.075	0.613	0.373	1.089	0.065	0.432	0.979	0.379	1.017
Departure Headway (Hd)	11.817	11.288	10.548	10.744	9.983	11.152	10.49	11.21	10.664
Convergence, Y/N	Yes	Yes	Yes	Yes	Yes	Yes	Yes	Yes	Yes
Cap	305	322	343	340	361	325	348	323	343
Service Time	9.517	8.988	8.248	8.444	7.683	8.852	8.19	8.91	8.364
HCM Lane V/C Ratio	0.079	0.637	0.388	1.1	0.066	0.449	1.009	0.396	1.052
HCM Control Delay	15.5	30.3	19.4	108.7	13.4	22.1	76.6	20.6	87.2
HCM Lane LOS	C	D	C	F	B	C	F	C	F
HCM 95th-tile Q	0.2	3.8	1.7	13.7	0.2	2.1	10.8	1.7	11.7

Intersection	
Int Delay, s/veh	2.6

Movement	EBL	EBT	EBR	WBL	WBT	WBR	NBL	NBT	NBR	SBL	SBT	SBR
Lane Configurations												
Traffic Vol, veh/h	1	28	9	6	4	5	3	67	3	23	151	2
Future Vol, veh/h	1	28	9	6	4	5	3	67	3	23	151	2
Conflicting Peds, #/hr	0	0	2	0	0	1	0	0	5	0	0	0
Sign Control	Stop	Stop	Stop	Stop	Stop	Stop	Free	Free	Free	Free	Free	Free
RT Channelized	-	-	None	-	-	None	-	-	None	-	-	None
Storage Length	-	-	-	-	-	-	-	-	-	-	-	-
Veh in Median Storage, #	-	0	-	-	0	-	-	0	-	-	0	-
Grade, %	-	0	-	-	0	-	-	0	-	-	0	-
Peak Hour Factor	91	91	91	91	91	91	91	91	91	91	91	91
Heavy Vehicles, %	2	2	2	2	2	2	2	2	2	2	2	2
Mvmt Flow	1	31	10	7	4	5	3	74	3	25	166	2

Major/Minor	Minor2			Minor1			Major1			Major2		
Conflicting Flow All	304	305	169	327	305	82	168	0	0	82	0	0
Stage 1	217	217	-	87	87	-	-	-	-	-	-	-
Stage 2	87	88	-	240	218	-	-	-	-	-	-	-
Critical Hdwy	7.12	6.52	6.22	7.12	6.52	6.22	4.12	-	-	4.12	-	-
Critical Hdwy Stg 1	6.12	5.52	-	6.12	5.52	-	-	-	-	-	-	-
Critical Hdwy Stg 2	6.12	5.52	-	6.12	5.52	-	-	-	-	-	-	-
Follow-up Hdwy	3.518	4.018	3.318	3.518	4.018	3.318	2.218	-	-	2.218	-	-
Pot Cap-1 Maneuver	648	608	875	626	608	978	1410	-	-	1515	-	-
Stage 1	785	723	-	921	823	-	-	-	-	-	-	-
Stage 2	921	822	-	763	723	-	-	-	-	-	-	-
Platoon blocked, %								-	-		-	-
Mov Cap-1 Maneuver	631	593	873	582	593	972	1410	-	-	1508	-	-
Mov Cap-2 Maneuver	631	593	-	582	593	-	-	-	-	-	-	-
Stage 1	783	710	-	915	817	-	-	-	-	-	-	-
Stage 2	908	816	-	707	710	-	-	-	-	-	-	-

Approach	EB	WB	NB	SB
HCM Control Delay, s	11	10.5	0.3	1
HCM LOS	B	B		

Minor Lane/Major Mvmt	NBL	NBT	NBR	EBLn1	WBLn1	SBL	SBT	SBR
Capacity (veh/h)	1410	-	-	643	676	1508	-	-
HCM Lane V/C Ratio	0.002	-	-	0.065	0.024	0.017	-	-
HCM Control Delay (s)	7.6	0	-	11	10.5	7.4	0	-
HCM Lane LOS	A	A	-	B	B	A	A	-
HCM 95th %tile Q(veh)	0	-	-	0.2	0.1	0.1	-	-

Intersection	
Int Delay, s/veh	8.5

Movement	EBL	EBR	NBL	NBT	SBT	SBR
Lane Configurations						
Traffic Vol, veh/h	58	15	294	1	477	23
Future Vol, veh/h	58	15	294	1	477	23
Conflicting Peds, #/hr	0	0	0	0	0	0
Sign Control	Stop	Stop	Free	Free	Free	Free
RT Channelized	-	None	-	None	-	None
Storage Length	0	-	-	-	-	-
Veh in Median Storage, #	0	-	-	0	0	-
Grade, %	0	-	-	0	0	-
Peak Hour Factor	86	86	86	86	86	86
Heavy Vehicles, %	2	2	2	2	2	2
Mvmt Flow	67	17	342	1	555	27

Major/Minor	Minor2		Major1		Major2	
Conflicting Flow All	1254	569	582	0	-	0
Stage 1	569	-	-	-	-	-
Stage 2	685	-	-	-	-	-
Critical Hdwy	6.42	6.22	4.12	-	-	-
Critical Hdwy Stg 1	5.42	-	-	-	-	-
Critical Hdwy Stg 2	5.42	-	-	-	-	-
Follow-up Hdwy	3.518	3.318	2.218	-	-	-
Pot Cap-1 Maneuver	190	522	992	-	-	-
Stage 1	566	-	-	-	-	-
Stage 2	500	-	-	-	-	-
Platoon blocked, %				-	-	-
Mov Cap-1 Maneuver	124	522	992	-	-	-
Mov Cap-2 Maneuver	124	-	-	-	-	-
Stage 1	371	-	-	-	-	-
Stage 2	500	-	-	-	-	-

Approach	EB	NB	SB
HCM Control Delay, s	58.5	10.5	0
HCM LOS	F		

Minor Lane/Major Mvmt	NBL	NBT	EBLn1	SBT	SBR
Capacity (veh/h)	992	-	147	-	-
HCM Lane V/C Ratio	0.345	-	0.577	-	-
HCM Control Delay (s)	10.5	0	58.5	-	-
HCM Lane LOS	B	A	F	-	-
HCM 95th %tile Q(veh)	1.5	-	3	-	-

Intersection	
Int Delay, s/veh	3.7

Movement	EBL	EBT	EBR	WBL	WBT	WBR	NBL	NBT	NBR	SBL	SBT	SBR
Lane Configurations												
Traffic Vol, veh/h	23	18	17	7	15	8	8	36	3	14	117	27
Future Vol, veh/h	23	18	17	7	15	8	8	36	3	14	117	27
Conflicting Peds, #/hr	0	0	0	0	0	1	0	0	2	0	0	7
Sign Control	Stop	Stop	Stop	Stop	Stop	Stop	Free	Free	Free	Free	Free	Free
RT Channelized	-	-	None	-	-	None	-	-	None	-	-	None
Storage Length	-	-	-	-	-	-	-	-	-	-	-	-
Veh in Median Storage, #	-	0	-	-	0	-	-	0	-	-	0	-
Grade, %	-	0	-	-	0	-	-	0	-	-	0	-
Peak Hour Factor	94	94	94	94	94	94	94	94	94	94	94	94
Heavy Vehicles, %	2	2	2	2	2	2	2	2	2	2	2	2
Mvmt Flow	24	19	18	7	16	9	9	38	3	15	124	29

Major/Minor	Minor2			Minor1			Major1			Major2		
Conflicting Flow All	247	237	146	247	250	43	160	0	0	43	0	0
Stage 1	176	176	-	60	60	-	-	-	-	-	-	-
Stage 2	71	61	-	187	190	-	-	-	-	-	-	-
Critical Hdwy	7.12	6.52	6.22	7.12	6.52	6.22	4.12	-	-	4.12	-	-
Critical Hdwy Stg 1	6.12	5.52	-	6.12	5.52	-	-	-	-	-	-	-
Critical Hdwy Stg 2	6.12	5.52	-	6.12	5.52	-	-	-	-	-	-	-
Follow-up Hdwy	3.518	4.018	3.318	3.518	4.018	3.318	2.218	-	-	2.218	-	-
Pot Cap-1 Maneuver	707	664	901	707	653	1027	1419	-	-	1566	-	-
Stage 1	826	753	-	951	845	-	-	-	-	-	-	-
Stage 2	939	844	-	815	743	-	-	-	-	-	-	-
Platoon blocked, %								-	-		-	-
Mov Cap-1 Maneuver	673	646	895	667	635	1024	1410	-	-	1563	-	-
Mov Cap-2 Maneuver	673	646	-	667	635	-	-	-	-	-	-	-
Stage 1	814	739	-	942	837	-	-	-	-	-	-	-
Stage 2	906	836	-	769	730	-	-	-	-	-	-	-

Approach	EB	WB	NB	SB
HCM Control Delay, s	10.5	10.3	1.3	0.6
HCM LOS	B	B		

Minor Lane/Major Mvmt	NBL	NBT	NBR	EBLn1	WBLn1	SBL	SBT	SBR
Capacity (veh/h)	1410	-	-	716	715	1563	-	-
HCM Lane V/C Ratio	0.006	-	-	0.086	0.045	0.01	-	-
HCM Control Delay (s)	7.6	0	-	10.5	10.3	7.3	0	-
HCM Lane LOS	A	A	-	B	B	A	A	-
HCM 95th %tile Q(veh)	0	-	-	0.3	0.1	0	-	-

Movement	EBL	EBT	EBR	WBL	WBT	WBR	NEL	NET	NER	SWL	SWT	SWR
Lane Configurations												
Traffic Volume (veh/h)	28	172	20	185	303	11	96	399	234	22	337	71
Future Volume (veh/h)	28	172	20	185	303	11	96	399	234	22	337	71
Number	7	4	14	3	8	18	5	2	12	1	6	16
Initial Q (Qb), veh	0	0	0	0	0	0	0	0	0	0	0	0
Ped-Bike Adj(A_pbT)	1.00		1.00	1.00		1.00	1.00		1.00	1.00		1.00
Parking Bus, Adj	1.00	1.00	1.00	1.00	1.00	1.00	1.00	1.00	1.00	1.00	1.00	1.00
Adj Sat Flow, veh/h/ln	1863	1863	1900	1863	1863	1900	1863	1863	1863	1863	1863	1863
Adj Flow Rate, veh/h	30	185	22	199	326	12	100	416	244	28	427	90
Adj No. of Lanes	1	1	0	1	1	0	1	1	1	1	1	1
Peak Hour Factor	0.93	0.93	0.93	0.93	0.93	0.93	0.96	0.96	0.96	0.79	0.79	0.79
Percent Heavy Veh, %	2	2	2	2	2	2	2	2	2	2	2	2
Cap, veh/h	436	654	78	538	714	26	355	745	633	335	745	633
Arrive On Green	0.40	0.40	0.40	0.40	0.40	0.40	0.40	0.40	0.40	0.40	0.40	0.40
Sat Flow, veh/h	1038	1634	194	1170	1785	66	881	1863	1583	771	1863	1583
Grp Volume(v), veh/h	30	0	207	199	0	338	100	416	244	28	427	90
Grp Sat Flow(s),veh/h/ln	1038	0	1828	1170	0	1851	881	1863	1583	771	1863	1583
Q Serve(g_s), s	1.0	0.0	3.4	6.2	0.0	6.0	4.5	7.8	4.9	1.3	8.0	1.6
Cycle Q Clear(g_c), s	7.0	0.0	3.4	9.7	0.0	6.0	12.5	7.8	4.9	9.1	8.0	1.6
Prop In Lane	1.00		0.11	1.00		0.04	1.00		1.00	1.00		1.00
Lane Grp Cap(c), veh/h	436	0	731	538	0	740	355	745	633	335	745	633
V/C Ratio(X)	0.07	0.00	0.28	0.37	0.00	0.46	0.28	0.56	0.39	0.08	0.57	0.14
Avail Cap(c_a), veh/h	436	0	731	538	0	740	355	745	633	335	745	633
HCM Platoon Ratio	1.00	1.00	1.00	1.00	1.00	1.00	1.00	1.00	1.00	1.00	1.00	1.00
Upstream Filter(I)	1.00	0.00	1.00	1.00	0.00	1.00	1.00	1.00	1.00	1.00	1.00	1.00
Uniform Delay (d), s/veh	12.5	0.0	9.1	12.4	0.0	9.9	15.4	10.4	9.6	13.9	10.5	8.6
Incr Delay (d2), s/veh	0.3	0.0	1.0	1.9	0.0	2.0	2.0	3.0	1.8	0.5	3.2	0.5
Initial Q Delay(d3),s/veh	0.0	0.0	0.0	0.0	0.0	0.0	0.0	0.0	0.0	0.0	0.0	0.0
%ile BackOfQ(50%),veh/ln	0.3	0.0	1.9	2.3	0.0	3.4	1.3	4.6	2.4	0.3	4.7	0.8
LnGrp Delay(d),s/veh	12.8	0.0	10.1	14.4	0.0	11.9	17.4	13.4	11.3	14.4	13.7	9.1
LnGrp LOS	B		B	B		B	B	B	B	B	B	A
Approach Vol, veh/h		237			537			760			545	
Approach Delay, s/veh		10.4			12.8			13.3			13.0	
Approach LOS		B			B			B			B	

Timer	1	2	3	4	5	6	7	8
Assigned Phs		2		4		6		8
Phs Duration (G+Y+Rc), s		22.5		22.5		22.5		22.5
Change Period (Y+Rc), s		4.5		4.5		4.5		4.5
Max Green Setting (Gmax), s		18.0		18.0		18.0		18.0
Max Q Clear Time (g_c+I1), s		14.5		9.0		11.1		11.7
Green Ext Time (p_c), s		1.4		0.8		1.8		1.5

Intersection Summary	
HCM 2010 Ctrl Delay	12.8
HCM 2010 LOS	B

Intersection	
Int Delay, s/veh	0.3

Movement	EBT	EBR	WBL	WBT	NBL	NBR
Lane Configurations						
Traffic Vol, veh/h	405	42	2	475	12	5
Future Vol, veh/h	405	42	2	475	12	5
Conflicting Peds, #/hr	0	1	1	0	0	0
Sign Control	Free	Free	Free	Free	Stop	Stop
RT Channelized	-	None	-	None	-	None
Storage Length	-	-	-	-	0	-
Veh in Median Storage, #	0	-	-	0	0	-
Grade, %	0	-	-	0	0	-
Peak Hour Factor	95	95	95	95	95	95
Heavy Vehicles, %	2	2	2	2	2	2
Mvmt Flow	426	44	2	500	13	5

Major/Minor	Major1		Major2		Minor1	
Conflicting Flow All	0	0	471	0	953	449
Stage 1	-	-	-	-	449	-
Stage 2	-	-	-	-	504	-
Critical Hdwy	-	-	4.12	-	6.42	6.22
Critical Hdwy Stg 1	-	-	-	-	5.42	-
Critical Hdwy Stg 2	-	-	-	-	5.42	-
Follow-up Hdwy	-	-	2.218	-	3.518	3.318
Pot Cap-1 Maneuver	-	-	1091	-	287	610
Stage 1	-	-	-	-	643	-
Stage 2	-	-	-	-	607	-
Platoon blocked, %	-	-		-		
Mov Cap-1 Maneuver	-	-	1090	-	286	609
Mov Cap-2 Maneuver	-	-	-	-	286	-
Stage 1	-	-	-	-	642	-
Stage 2	-	-	-	-	605	-

Approach	EB	WB	NB
HCM Control Delay, s	0	0	16.2
HCM LOS			C

Minor Lane/Major Mvmt	NBLn1	EBT	EBR	WBL	WBT
Capacity (veh/h)	339	-	-	1090	-
HCM Lane V/C Ratio	0.053	-	-	0.002	-
HCM Control Delay (s)	16.2	-	-	8.3	0
HCM Lane LOS	C	-	-	A	A
HCM 95th %tile Q(veh)	0.2	-	-	0	-

Intersection	
Intersection Delay, s/veh	18.3
Intersection LOS	C

Movement	EBT	EBR	WBL	WBT	NBL	NBR
Lane Configurations						
Traffic Vol, veh/h	331	70	103	375	105	84
Future Vol, veh/h	331	70	103	375	105	84
Peak Hour Factor	0.93	0.93	0.93	0.93	0.93	0.93
Heavy Vehicles, %	2	2	2	2	2	2
Mvmt Flow	356	75	111	403	113	90
Number of Lanes	1	0	0	1	1	0

Approach	EB	WB	NB
Opposing Approach	WB	EB	
Opposing Lanes	1	1	0
Conflicting Approach Left		NB	EB
Conflicting Lanes Left	0	1	1
Conflicting Approach Right	NB		WB
Conflicting Lanes Right	1	0	1
HCM Control Delay	16.5	22.1	12.3
HCM LOS	C	C	B

Lane	NBLn1	EBLn1	WBLn1
Vol Left, %	56%	0%	22%
Vol Thru, %	0%	83%	78%
Vol Right, %	44%	17%	0%
Sign Control	Stop	Stop	Stop
Traffic Vol by Lane	189	401	478
LT Vol	105	0	103
Through Vol	0	331	375
RT Vol	84	70	0
Lane Flow Rate	203	431	514
Geometry Grp	1	1	1
Degree of Util (X)	0.343	0.622	0.746
Departure Headway (Hd)	6.08	5.194	5.225
Convergence, Y/N	Yes	Yes	Yes
Cap	589	694	694
Service Time	4.13	3.235	3.263
HCM Lane V/C Ratio	0.345	0.621	0.741
HCM Control Delay	12.3	16.5	22.1
HCM Lane LOS	B	C	C
HCM 95th-tile Q	1.5	4.4	6.7

Intersection	
Intersection Delay, s/veh	13.4
Intersection LOS	B

Movement	EBL	EBT	WBT	WBR	SBL	SBR
Lane Configurations						
Traffic Vol, veh/h	47	368	392	22	26	90
Future Vol, veh/h	47	368	392	22	26	90
Peak Hour Factor	0.96	0.96	0.96	0.96	0.96	0.96
Heavy Vehicles, %	2	2	2	2	2	2
Mvmt Flow	49	383	408	23	27	94
Number of Lanes	0	1	1	0	1	0

Approach	EB	WB	SB
Opposing Approach	WB	EB	
Opposing Lanes	1	1	0
Conflicting Approach Left	SB		WB
Conflicting Lanes Left	1	0	1
Conflicting Approach Right		SB	EB
Conflicting Lanes Right	0	1	1
HCM Control Delay	14.1	13.8	9.7
HCM LOS	B	B	A

Lane	EBLn1	WBLn1	SBLn1
Vol Left, %	11%	0%	22%
Vol Thru, %	89%	95%	0%
Vol Right, %	0%	5%	78%
Sign Control	Stop	Stop	Stop
Traffic Vol by Lane	415	414	116
LT Vol	47	0	26
Through Vol	368	392	0
RT Vol	0	22	90
Lane Flow Rate	432	431	121
Geometry Grp	1	1	1
Degree of Util (X)	0.572	0.565	0.181
Departure Headway (Hd)	4.764	4.716	5.407
Convergence, Y/N	Yes	Yes	Yes
Cap	752	759	656
Service Time	2.828	2.779	3.506
HCM Lane V/C Ratio	0.574	0.568	0.184
HCM Control Delay	14.1	13.8	9.7
HCM Lane LOS	B	B	A
HCM 95th-tile Q	3.7	3.6	0.7

Intersection	
Intersection Delay, s/veh	111.4
Intersection LOS	F

Movement	EBL	EBT	EBR	WBL	WBT	WBR	NBL	NBT	NBR	SBL	SBT	SBR
Lane Configurations												
Traffic Vol, veh/h	36	341	26	71	342	30	29	325	198	95	247	41
Future Vol, veh/h	36	341	26	71	342	30	29	325	198	95	247	41
Peak Hour Factor	0.92	0.92	0.92	0.92	0.92	0.92	0.92	0.92	0.92	0.92	0.92	0.92
Heavy Vehicles, %	2	2	2	2	2	2	2	2	2	2	2	2
Mvmt Flow	39	371	28	77	372	33	32	353	215	103	268	45
Number of Lanes	0	1	0	1	1	0	1	1	1	1	1	0

Approach	EB	WB	NB	SB
Opposing Approach	WB	EB	SB	NB
Opposing Lanes	2	1	2	3
Conflicting Approach Left	SB	NB	EB	WB
Conflicting Lanes Left	2	3	1	2
Conflicting Approach Right	NB	SB	WB	EB
Conflicting Lanes Right	3	2	2	1
HCM Control Delay	199.9	130.9	66.2	61.1
HCM LOS	F	F	F	F

Lane	NBLn1	NBLn2	NBLn3	EBLn1	WBLn1	WBLn2	SBLn1	SBLn2
Vol Left, %	100%	0%	0%	9%	100%	0%	100%	0%
Vol Thru, %	0%	100%	0%	85%	0%	92%	0%	86%
Vol Right, %	0%	0%	100%	6%	0%	8%	0%	14%
Sign Control	Stop	Stop	Stop	Stop	Stop	Stop	Stop	Stop
Traffic Vol by Lane	29	325	198	403	71	372	95	288
LT Vol	29	0	0	36	71	0	95	0
Through Vol	0	325	0	341	0	342	0	247
RT Vol	0	0	198	26	0	30	0	41
Lane Flow Rate	32	353	215	438	77	404	103	313
Geometry Grp	8	8	8	8	8	8	8	8
Degree of Util (X)	0.096	1.023	0.581	1.329	0.241	1.203	0.326	0.935
Departure Headway (Hd)	12.392	11.859	11.113	11.65	12.407	11.816	13.019	12.368
Convergence, Y/N	Yes	Yes	Yes	Yes	Yes	Yes	Yes	Yes
Cap	291	307	327	315	291	311	278	294
Service Time	10.092	9.559	8.813	9.35	10.107	9.516	10.719	10.068
HCM Lane V/C Ratio	0.11	1.15	0.657	1.39	0.265	1.299	0.371	1.065
HCM Control Delay	16.4	93.8	28.1	199.9	19	152.3	21.9	74
HCM Lane LOS	C	F	D	F	C	F	C	F
HCM 95th-tile Q	0.3	11.2	3.5	20.3	0.9	16.2	1.4	9

Intersection	
Intersection Delay, s/veh	8.8
Intersection LOS	A

Movement	EBL	EBT	EBR	WBL	WBT	WBR	NBL	NBT	NBR	SBL	SBT	SBR
Lane Configurations												
Traffic Vol, veh/h	5	5	24	14	3	12	1	168	7	6	162	6
Future Vol, veh/h	5	5	24	14	3	12	1	168	7	6	162	6
Peak Hour Factor	0.80	0.80	0.80	0.80	0.80	0.80	0.80	0.80	0.80	0.80	0.80	0.80
Heavy Vehicles, %	2	2	2	2	2	2	2	2	2	2	2	2
Mvmt Flow	6	6	30	18	4	15	1	210	9	8	203	8
Number of Lanes	0	1	0	0	1	0	0	1	0	0	1	0

Approach	EB	WB	NB	SB
Opposing Approach	WB	EB	SB	NB
Opposing Lanes	1	1	1	1
Conflicting Approach Left	SB	NB	EB	WB
Conflicting Lanes Left	1	1	1	1
Conflicting Approach Right	NB	SB	WB	EB
Conflicting Lanes Right	1	1	1	1
HCM Control Delay	7.8	8.1	8.9	8.9
HCM LOS	A	A	A	A

Lane	NBLn1	EBLn1	WBLn1	SBLn1
Vol Left, %	1%	15%	48%	3%
Vol Thru, %	95%	15%	10%	93%
Vol Right, %	4%	71%	41%	3%
Sign Control	Stop	Stop	Stop	Stop
Traffic Vol by Lane	176	34	29	174
LT Vol	1	5	14	6
Through Vol	168	5	3	162
RT Vol	7	24	12	6
Lane Flow Rate	220	42	36	218
Geometry Grp	1	1	1	1
Degree of Util (X)	0.264	0.054	0.048	0.262
Departure Headway (Hd)	4.323	4.548	4.798	4.335
Convergence, Y/N	Yes	Yes	Yes	Yes
Cap	834	788	747	831
Service Time	2.34	2.574	2.825	2.351
HCM Lane V/C Ratio	0.264	0.053	0.048	0.262
HCM Control Delay	8.9	7.8	8.1	8.9
HCM Lane LOS	A	A	A	A
HCM 95th-tile Q	1.1	0.2	0.2	1.1

Intersection	
Int Delay, s/veh	1.4

Movement	EBL	EBR	NBL	NBT	SBT	SBR
Lane Configurations						
Traffic Vol, veh/h	43	11	12	529	301	23
Future Vol, veh/h	43	11	12	529	301	23
Conflicting Peds, #/hr	0	0	0	0	0	0
Sign Control	Stop	Stop	Free	Free	Free	Free
RT Channelized	-	None	-	None	-	None
Storage Length	0	-	-	-	-	-
Veh in Median Storage, #	0	-	-	0	0	-
Grade, %	0	-	-	0	0	-
Peak Hour Factor	80	80	95	95	80	80
Heavy Vehicles, %	2	2	2	2	2	2
Mvmt Flow	54	14	13	557	376	29

Major/Minor	Minor2		Major1		Major2	
Conflicting Flow All	974	391	405	0	-	0
Stage 1	391	-	-	-	-	-
Stage 2	583	-	-	-	-	-
Critical Hdwy	6.42	6.22	4.12	-	-	-
Critical Hdwy Stg 1	5.42	-	-	-	-	-
Critical Hdwy Stg 2	5.42	-	-	-	-	-
Follow-up Hdwy	3.518	3.318	2.218	-	-	-
Pot Cap-1 Maneuver	279	658	1154	-	-	-
Stage 1	683	-	-	-	-	-
Stage 2	558	-	-	-	-	-
Platoon blocked, %				-	-	-
Mov Cap-1 Maneuver	275	658	1154	-	-	-
Mov Cap-2 Maneuver	275	-	-	-	-	-
Stage 1	672	-	-	-	-	-
Stage 2	558	-	-	-	-	-

Approach	EB	NB	SB
HCM Control Delay, s	19.7	0.2	0
HCM LOS	C		

Minor Lane/Major Mvmt	NBL	NBT	EBLn1	SBT	SBR
Capacity (veh/h)	1154	-	312	-	-
HCM Lane V/C Ratio	0.011	-	0.216	-	-
HCM Control Delay (s)	8.2	0	19.7	-	-
HCM Lane LOS	A	A	C	-	-
HCM 95th %tile Q(veh)	0	-	0.8	-	-

Intersection	
Intersection Delay, s/veh	8.9
Intersection LOS	A

Movement	EBL	EBT	EBR	WBL	WBT	WBR	NBL	NBT	NBR	SBL	SBT	SBR
Lane Configurations												
Traffic Vol, veh/h	50	9	16	8	20	20	20	97	3	9	132	61
Future Vol, veh/h	50	9	16	8	20	20	20	97	3	9	132	61
Peak Hour Factor	0.80	0.80	0.80	0.80	0.80	0.80	0.80	0.80	0.80	0.80	0.80	0.80
Heavy Vehicles, %	2	2	2	2	2	2	2	2	2	2	2	2
Mvmt Flow	63	11	20	10	25	25	25	121	4	11	165	76
Number of Lanes	0	1	0	0	1	0	0	1	0	0	1	0

Approach	EB	WB	NB	SB
Opposing Approach	WB	EB	SB	NB
Opposing Lanes	1	1	1	1
Conflicting Approach Left	SB	NB	EB	WB
Conflicting Lanes Left	1	1	1	1
Conflicting Approach Right	NB	SB	WB	EB
Conflicting Lanes Right	1	1	1	1
HCM Control Delay	8.7	8.2	8.7	9.2
HCM LOS	A	A	A	A

Lane	NBLn1	EBLn1	WBLn1	SBLn1
Vol Left, %	17%	67%	17%	4%
Vol Thru, %	81%	12%	42%	65%
Vol Right, %	3%	21%	42%	30%
Sign Control	Stop	Stop	Stop	Stop
Traffic Vol by Lane	120	75	48	202
LT Vol	20	50	8	9
Through Vol	97	9	20	132
RT Vol	3	16	20	61
Lane Flow Rate	150	94	60	252
Geometry Grp	1	1	1	1
Degree of Util (X)	0.192	0.128	0.079	0.302
Departure Headway (Hd)	4.602	4.916	4.743	4.311
Convergence, Y/N	Yes	Yes	Yes	Yes
Cap	780	728	753	833
Service Time	2.633	2.955	2.785	2.339
HCM Lane V/C Ratio	0.192	0.129	0.08	0.303
HCM Control Delay	8.7	8.7	8.2	9.2
HCM Lane LOS	A	A	A	A
HCM 95th-tile Q	0.7	0.4	0.3	1.3

Movement	EBL	EBT	EBR	WBL	WBT	WBR	NEL	NET	NER	SWL	SWT	SWR
Lane Configurations												
Traffic Volume (veh/h)	36	307	17	127	167	14	64	323	220	30	376	66
Future Volume (veh/h)	36	307	17	127	167	14	64	323	220	30	376	66
Number	7	4	14	3	8	18	5	2	12	1	6	16
Initial Q (Qb), veh	0	0	0	0	0	0	0	0	0	0	0	0
Ped-Bike Adj(A_pbT)	1.00		1.00	1.00		1.00	1.00		1.00	1.00		1.00
Parking Bus, Adj	1.00	1.00	1.00	1.00	1.00	1.00	1.00	1.00	1.00	1.00	1.00	1.00
Adj Sat Flow, veh/h/ln	1863	1863	1900	1863	1863	1900	1863	1863	1863	1863	1863	1863
Adj Flow Rate, veh/h	42	357	20	153	201	17	71	359	244	32	404	71
Adj No. of Lanes	1	1	0	1	1	0	1	1	1	1	1	1
Peak Hour Factor	0.86	0.86	0.86	0.83	0.83	0.83	0.90	0.90	0.90	0.93	0.93	0.93
Percent Heavy Veh, %	2	2	2	2	2	2	2	2	2	2	2	2
Cap, veh/h	495	640	36	373	621	53	409	787	669	400	787	669
Arrive On Green	0.37	0.37	0.37	0.37	0.37	0.37	0.42	0.42	0.42	0.42	0.42	0.42
Sat Flow, veh/h	1158	1748	98	1002	1694	143	915	1863	1583	813	1863	1583
Grp Volume(v), veh/h	42	0	377	153	0	218	71	359	244	32	404	71
Grp Sat Flow(s),veh/h/ln	1158	0	1845	1002	0	1837	915	1863	1583	813	1863	1583
Q Serve(g_s), s	1.2	0.0	6.9	6.1	0.0	3.6	2.6	5.9	4.5	1.2	6.8	1.2
Cycle Q Clear(g_c), s	4.8	0.0	6.9	13.0	0.0	3.6	9.5	5.9	4.5	7.1	6.8	1.2
Prop In Lane	1.00		0.05	1.00		0.08	1.00		1.00	1.00		1.00
Lane Grp Cap(c), veh/h	495	0	676	373	0	673	409	787	669	400	787	669
V/C Ratio(X)	0.08	0.00	0.56	0.41	0.00	0.32	0.17	0.46	0.36	0.08	0.51	0.11
Avail Cap(c_a), veh/h	559	0	779	429	0	776	409	787	669	400	787	669
HCM Platoon Ratio	1.00	1.00	1.00	1.00	1.00	1.00	1.00	1.00	1.00	1.00	1.00	1.00
Upstream Filter(I)	1.00	0.00	1.00	1.00	0.00	1.00	1.00	1.00	1.00	1.00	1.00	1.00
Uniform Delay (d), s/veh	11.4	0.0	10.7	15.9	0.0	9.7	12.6	8.8	8.4	11.4	9.1	7.4
Incr Delay (d2), s/veh	0.1	0.0	0.7	0.7	0.0	0.3	0.9	1.9	1.5	0.4	2.4	0.3
Initial Q Delay(d3),s/veh	0.0	0.0	0.0	0.0	0.0	0.0	0.0	0.0	0.0	0.0	0.0	0.0
%ile BackOfQ(50%),veh/ln	0.4	0.0	3.6	1.7	0.0	1.9	0.8	3.4	2.3	0.3	4.0	0.6
LnGrp Delay(d),s/veh	11.5	0.0	11.5	16.7	0.0	10.0	13.5	10.7	9.9	11.7	11.5	7.8
LnGrp LOS	B		B	B		A	B	B	A	B	B	A
Approach Vol, veh/h		419			371			674			507	
Approach Delay, s/veh		11.5			12.7			10.7			11.0	
Approach LOS		B			B			B			B	

Timer	1	2	3	4	5	6	7	8
Assigned Phs		2		4		6		8
Phs Duration (G+Y+Rc), s		22.5		20.1		22.5		20.1
Change Period (Y+Rc), s		4.5		4.5		4.5		4.5
Max Green Setting (Gmax), s		18.0		18.0		18.0		18.0
Max Q Clear Time (g_c+I1), s		11.5		8.9		9.1		15.0
Green Ext Time (p_c), s		1.9		1.6		2.0		0.6

Intersection Summary	
HCM 2010 Ctrl Delay	11.3
HCM 2010 LOS	B

Intersection	
Int Delay, s/veh	0.2

Movement	EBT	EBR	WBL	WBT	NBL	NBR
Lane Configurations						
Traffic Vol, veh/h	491	33	2	268	8	3
Future Vol, veh/h	491	33	2	268	8	3
Conflicting Peds, #/hr	0	0	0	0	0	1
Sign Control	Free	Free	Free	Free	Stop	Stop
RT Channelized	-	None	-	None	-	None
Storage Length	-	-	-	-	0	-
Veh in Median Storage, #	0	-	-	0	0	-
Grade, %	0	-	-	0	0	-
Peak Hour Factor	93	93	93	93	93	93
Heavy Vehicles, %	2	2	2	2	2	2
Mvmt Flow	528	35	2	288	9	3

Major/Minor	Major1		Major2		Minor1	
Conflicting Flow All	0	0	563	0	838	547
Stage 1	-	-	-	-	546	-
Stage 2	-	-	-	-	292	-
Critical Hdwy	-	-	4.12	-	6.42	6.22
Critical Hdwy Stg 1	-	-	-	-	5.42	-
Critical Hdwy Stg 2	-	-	-	-	5.42	-
Follow-up Hdwy	-	-	2.218	-	3.518	3.318
Pot Cap-1 Maneuver	-	-	1008	-	336	537
Stage 1	-	-	-	-	580	-
Stage 2	-	-	-	-	758	-
Platoon blocked, %	-	-		-		
Mov Cap-1 Maneuver	-	-	1008	-	335	536
Mov Cap-2 Maneuver	-	-	-	-	335	-
Stage 1	-	-	-	-	580	-
Stage 2	-	-	-	-	756	-

Approach	EB	WB	NB
HCM Control Delay, s	0	0.1	15
HCM LOS			C

Minor Lane/Major Mvmt	NBLn1	EBT	EBR	WBL	WBT
Capacity (veh/h)	373	-	-	1008	-
HCM Lane V/C Ratio	0.032	-	-	0.002	-
HCM Control Delay (s)	15	-	-	8.6	0
HCM Lane LOS	C	-	-	A	A
HCM 95th %tile Q(veh)	0.1	-	-	0	-

Intersection	
Intersection Delay, s/veh	13.3
Intersection LOS	B

Movement	EBT	EBR	WBL	WBT	NBL	NBR
Lane Configurations						
Traffic Vol, veh/h	363	128	47	268	41	34
Future Vol, veh/h	363	128	47	268	41	34
Peak Hour Factor	0.93	0.93	0.93	0.93	0.93	0.93
Heavy Vehicles, %	2	2	2	2	2	2
Mvmt Flow	390	138	51	288	44	37
Number of Lanes	1	0	0	1	1	0

Approach	EB	WB	NB
Opposing Approach	WB	EB	
Opposing Lanes	1	1	0
Conflicting Approach Left		NB	EB
Conflicting Lanes Left	0	1	1
Conflicting Approach Right	NB		WB
Conflicting Lanes Right	1	0	1
HCM Control Delay	15	11.6	9.5
HCM LOS	B	B	A

Lane	NBLn1	EBLn1	WBLn1
Vol Left, %	55%	0%	15%
Vol Thru, %	0%	74%	85%
Vol Right, %	45%	26%	0%
Sign Control	Stop	Stop	Stop
Traffic Vol by Lane	75	491	315
LT Vol	41	0	47
Through Vol	0	363	268
RT Vol	34	128	0
Lane Flow Rate	81	528	339
Geometry Grp	1	1	1
Degree of Util (X)	0.126	0.642	0.445
Departure Headway (Hd)	5.617	4.38	4.734
Convergence, Y/N	Yes	Yes	Yes
Cap	633	824	759
Service Time	3.697	2.42	2.782
HCM Lane V/C Ratio	0.128	0.641	0.447
HCM Control Delay	9.5	15	11.6
HCM Lane LOS	A	B	B
HCM 95th-tile Q	0.4	4.8	2.3

Intersection	
Intersection Delay, s/veh	11.3
Intersection LOS	B

Movement	EBL	EBT	WBT	WBR	SBL	SBR
Lane Configurations						
Traffic Vol, veh/h	34	361	276	39	34	39
Future Vol, veh/h	34	361	276	39	34	39
Peak Hour Factor	0.96	0.96	0.96	0.96	0.96	0.96
Heavy Vehicles, %	2	2	2	2	2	2
Mvmt Flow	35	376	288	41	35	41
Number of Lanes	0	1	1	0	1	0

Approach	EB	WB	SB
Opposing Approach	WB	EB	
Opposing Lanes	1	1	0
Conflicting Approach Left	SB		WB
Conflicting Lanes Left	1	0	1
Conflicting Approach Right		SB	EB
Conflicting Lanes Right	0	1	1
HCM Control Delay	12.2	10.6	9
HCM LOS	B	B	A

Lane	EBLn1	WBLn1	SBLn1
Vol Left, %	9%	0%	47%
Vol Thru, %	91%	88%	0%
Vol Right, %	0%	12%	53%
Sign Control	Stop	Stop	Stop
Traffic Vol by Lane	395	315	73
LT Vol	34	0	34
Through Vol	361	276	0
RT Vol	0	39	39
Lane Flow Rate	411	328	76
Geometry Grp	1	1	1
Degree of Util (X)	0.514	0.41	0.112
Departure Headway (Hd)	4.501	4.499	5.307
Convergence, Y/N	Yes	Yes	Yes
Cap	802	801	672
Service Time	2.533	2.533	3.364
HCM Lane V/C Ratio	0.512	0.409	0.113
HCM Control Delay	12.2	10.6	9
HCM Lane LOS	B	B	A
HCM 95th-tile Q	3	2	0.4

Intersection	
Intersection Delay, s/veh	70.6
Intersection LOS	F

Movement	EBL	EBT	EBR	WBL	WBT	WBR	NBL	NBT	NBR	SBL	SBT	SBR
Lane Configurations												
Traffic Vol, veh/h	20	339	23	140	274	63	23	197	128	123	339	8
Future Vol, veh/h	20	339	23	140	274	63	23	197	128	123	339	8
Peak Hour Factor	0.96	0.96	0.96	0.96	0.96	0.96	0.96	0.96	0.96	0.96	0.96	0.96
Heavy Vehicles, %	2	2	2	2	2	2	2	2	2	2	2	2
Mvmt Flow	21	353	24	146	285	66	24	205	133	128	353	8
Number of Lanes	0	1	0	1	1	0	1	1	1	1	1	0

Approach	EB	WB	NB	SB
Opposing Approach	WB	EB	SB	NB
Opposing Lanes	2	1	2	3
Conflicting Approach Left	SB	NB	EB	WB
Conflicting Lanes Left	2	3	1	2
Conflicting Approach Right	NB	SB	WB	EB
Conflicting Lanes Right	3	2	2	1
HCM Control Delay	128	59.8	25.3	68.5
HCM LOS	F	F	D	F

Lane	NBLn1	NBLn2	NBLn3	EBLn1	WBLn1	WBLn2	SBLn1	SBLn2
Vol Left, %	100%	0%	0%	5%	100%	0%	100%	0%
Vol Thru, %	0%	100%	0%	89%	0%	81%	0%	98%
Vol Right, %	0%	0%	100%	6%	0%	19%	0%	2%
Sign Control	Stop	Stop	Stop	Stop	Stop	Stop	Stop	Stop
Traffic Vol by Lane	23	197	128	382	140	337	123	347
LT Vol	23	0	0	20	140	0	123	0
Through Vol	0	197	0	339	0	274	0	339
RT Vol	0	0	128	23	0	63	0	8
Lane Flow Rate	24	205	133	398	146	351	128	361
Geometry Grp	8	8	8	8	8	8	8	8
Degree of Util (X)	0.074	0.608	0.369	1.148	0.429	0.972	0.376	1.008
Departure Headway (Hd)	11.904	11.374	10.632	10.653	11.269	10.605	11.368	10.816
Convergence, Y/N	Yes	Yes	Yes	Yes	Yes	Yes	Yes	Yes
Cap	303	320	340	342	322	344	319	340
Service Time	9.604	9.074	8.332	8.353	8.969	8.305	9.068	8.516
HCM Lane V/C Ratio	0.079	0.641	0.391	1.164	0.453	1.02	0.401	1.062
HCM Control Delay	15.6	30.2	19.4	128	22.2	75.4	20.8	85.4
HCM Lane LOS	C	D	C	F	C	F	C	F
HCM 95th-tile Q	0.2	3.7	1.7	15.6	2.1	10.5	1.7	11.4

Intersection	
Intersection Delay, s/veh	8.1
Intersection LOS	A

Movement	EBL	EBT	EBR	WBL	WBT	WBR	NBL	NBT	NBR	SBL	SBT	SBR
Lane Configurations												
Traffic Vol, veh/h	1	28	9	6	4	5	3	67	3	23	151	2
Future Vol, veh/h	1	28	9	6	4	5	3	67	3	23	151	2
Peak Hour Factor	0.91	0.91	0.91	0.91	0.91	0.91	0.91	0.91	0.91	0.91	0.91	0.91
Heavy Vehicles, %	2	2	2	2	2	2	2	2	2	2	2	2
Mvmt Flow	1	31	10	7	4	5	3	74	3	25	166	2
Number of Lanes	0	1	0	0	1	0	0	1	0	0	1	0

Approach	EB	WB	NB	SB
Opposing Approach	WB	EB	SB	NB
Opposing Lanes	1	1	1	1
Conflicting Approach Left	SB	NB	EB	WB
Conflicting Lanes Left	1	1	1	1
Conflicting Approach Right	NB	SB	WB	EB
Conflicting Lanes Right	1	1	1	1
HCM Control Delay	7.7	7.6	7.7	8.4
HCM LOS	A	A	A	A

Lane	NBLn1	EBLn1	WBLn1	SBLn1
Vol Left, %	4%	3%	40%	13%
Vol Thru, %	92%	74%	27%	86%
Vol Right, %	4%	24%	33%	1%
Sign Control	Stop	Stop	Stop	Stop
Traffic Vol by Lane	73	38	15	176
LT Vol	3	1	6	23
Through Vol	67	28	4	151
RT Vol	3	9	5	2
Lane Flow Rate	80	42	16	193
Geometry Grp	1	1	1	1
Degree of Util (X)	0.093	0.051	0.02	0.221
Departure Headway (Hd)	4.166	4.418	4.464	4.116
Convergence, Y/N	Yes	Yes	Yes	Yes
Cap	849	816	807	866
Service Time	2.247	2.418	2.465	2.172
HCM Lane V/C Ratio	0.094	0.051	0.02	0.223
HCM Control Delay	7.7	7.7	7.6	8.4
HCM Lane LOS	A	A	A	A
HCM 95th-tile Q	0.3	0.2	0.1	0.8

Intersection	
Int Delay, s/veh	8.5

Movement	EBL	EBR	NBL	NBT	SBT	SBR
Lane Configurations						
Traffic Vol, veh/h	58	15	294	1	477	23
Future Vol, veh/h	58	15	294	1	477	23
Conflicting Peds, #/hr	0	0	0	0	0	0
Sign Control	Stop	Stop	Free	Free	Free	Free
RT Channelized	-	None	-	None	-	None
Storage Length	0	-	-	-	-	-
Veh in Median Storage, #	0	-	-	0	0	-
Grade, %	0	-	-	0	0	-
Peak Hour Factor	86	86	86	86	86	86
Heavy Vehicles, %	2	2	2	2	2	2
Mvmt Flow	67	17	342	1	555	27

Major/Minor	Minor2		Major1		Major2	
Conflicting Flow All	1254	569	582	0	-	0
Stage 1	569	-	-	-	-	-
Stage 2	685	-	-	-	-	-
Critical Hdwy	6.42	6.22	4.12	-	-	-
Critical Hdwy Stg 1	5.42	-	-	-	-	-
Critical Hdwy Stg 2	5.42	-	-	-	-	-
Follow-up Hdwy	3.518	3.318	2.218	-	-	-
Pot Cap-1 Maneuver	190	522	992	-	-	-
Stage 1	566	-	-	-	-	-
Stage 2	500	-	-	-	-	-
Platoon blocked, %				-	-	-
Mov Cap-1 Maneuver	124	522	992	-	-	-
Mov Cap-2 Maneuver	124	-	-	-	-	-
Stage 1	371	-	-	-	-	-
Stage 2	500	-	-	-	-	-

Approach	EB	NB	SB
HCM Control Delay, s	58.5	10.5	0
HCM LOS	F		

Minor Lane/Major Mvmt	NBL	NBT	EBLn1	SBT	SBR
Capacity (veh/h)	992	-	147	-	-
HCM Lane V/C Ratio	0.345	-	0.577	-	-
HCM Control Delay (s)	10.5	0	58.5	-	-
HCM Lane LOS	B	A	F	-	-
HCM 95th %tile Q(veh)	1.5	-	3	-	-

Intersection	
Intersection Delay, s/veh	7.9
Intersection LOS	A

Movement	EBL	EBT	EBR	WBL	WBT	WBR	NBL	NBT	NBR	SBL	SBT	SBR
Lane Configurations												
Traffic Vol, veh/h	23	18	17	7	15	8	8	36	3	14	117	27
Future Vol, veh/h	23	18	17	7	15	8	8	36	3	14	117	27
Peak Hour Factor	0.94	0.94	0.94	0.94	0.94	0.94	0.94	0.94	0.94	0.94	0.94	0.94
Heavy Vehicles, %	2	2	2	2	2	2	2	2	2	2	2	2
Mvmt Flow	24	19	18	7	16	9	9	38	3	15	124	29
Number of Lanes	0	1	0	0	1	0	0	1	0	0	1	0

Approach	EB	WB	NB	SB
Opposing Approach	WB	EB	SB	NB
Opposing Lanes	1	1	1	1
Conflicting Approach Left	SB	NB	EB	WB
Conflicting Lanes Left	1	1	1	1
Conflicting Approach Right	NB	SB	WB	EB
Conflicting Lanes Right	1	1	1	1
HCM Control Delay	7.7	7.5	7.6	8.1
HCM LOS	A	A	A	A

Lane	NBLn1	EBLn1	WBLn1	SBLn1
Vol Left, %	17%	40%	23%	9%
Vol Thru, %	77%	31%	50%	74%
Vol Right, %	6%	29%	27%	17%
Sign Control	Stop	Stop	Stop	Stop
Traffic Vol by Lane	47	58	30	158
LT Vol	8	23	7	14
Through Vol	36	18	15	117
RT Vol	3	17	8	27
Lane Flow Rate	50	62	32	168
Geometry Grp	1	1	1	1
Degree of Util (X)	0.059	0.075	0.039	0.189
Departure Headway (Hd)	4.221	4.352	4.368	4.049
Convergence, Y/N	Yes	Yes	Yes	Yes
Cap	835	828	824	876
Service Time	2.319	2.353	2.37	2.123
HCM Lane V/C Ratio	0.06	0.075	0.039	0.192
HCM Control Delay	7.6	7.7	7.5	8.1
HCM Lane LOS	A	A	A	A
HCM 95th-tile Q	0.2	0.2	0.1	0.7

Intersection: 1: S El Monte Ave & Cuesta Dr

Movement	EB	EB	WB	WB	NE	NE	NE	SW	SW	SW
Directions Served	L	TR	L	TR	L	T	R	L	T	R
Maximum Queue (ft)	58	138	75	223	99	304	125	81	162	100
Average Queue (ft)	18	55	60	105	47	105	46	16	76	19
95th Queue (ft)	47	102	86	182	94	205	115	49	135	60
Link Distance (ft)		101		339		929			888	
Upstream Blk Time (%)		1								
Queuing Penalty (veh)		0								
Storage Bay Dist (ft)	50		50		75		100	75		75
Storage Blk Time (%)	1	9	18	20	2	10	0	0	5	0
Queuing Penalty (veh)	2	3	58	36	10	32	0	0	5	0

Intersection: 2: Arboleda Dr. & Cuesta Dr

Movement	EB	WB	NB
Directions Served	TR	LT	LR
Maximum Queue (ft)	12	38	31
Average Queue (ft)	1	2	12
95th Queue (ft)	7	18	36
Link Distance (ft)	101	1004	192
Upstream Blk Time (%)			
Queuing Penalty (veh)			
Storage Bay Dist (ft)			
Storage Blk Time (%)			
Queuing Penalty (veh)			

Intersection: 3: Campbell Ave & Cuesta Dr

Movement	EB	WB	NB
Directions Served	TR	LT	LR
Maximum Queue (ft)	153	127	89
Average Queue (ft)	74	67	47
95th Queue (ft)	115	99	75
Link Distance (ft)	1004	356	252
Upstream Blk Time (%)			
Queuing Penalty (veh)			
Storage Bay Dist (ft)			
Storage Blk Time (%)			
Queuing Penalty (veh)			

Intersection: 4: Cuesta Dr & S. Clark Ave.

Movement	EB	WB	SB
Directions Served	LT	TR	LR
Maximum Queue (ft)	69	23	97
Average Queue (ft)	21	1	43
95th Queue (ft)	56	10	74
Link Distance (ft)	356	1272	632
Upstream Blk Time (%)			
Queuing Penalty (veh)			
Storage Bay Dist (ft)			
Storage Blk Time (%)			
Queuing Penalty (veh)			

Intersection: 5: Springer Rd & Cuesta Dr

Movement	EB	EB	WB	WB	B11	NB	NB	NB	SB	SB
Directions Served	LT	R	L	TR	T	L	T	R	L	TR
Maximum Queue (ft)	324	75	78	238	17	74	246	125	132	182
Average Queue (ft)	155	31	33	126	1	35	144	63	41	87
95th Queue (ft)	290	85	59	220	16	87	252	165	88	153
Link Distance (ft)	1272		213	213	710		234			851
Upstream Blk Time (%)				3			4			
Queuing Penalty (veh)				0			24			
Storage Bay Dist (ft)		50				50		100	125	
Storage Blk Time (%)	67	0				0	56	1	0	3
Queuing Penalty (veh)	17	2				2	127	5	0	3

Intersection: 6: Campbell Ave & Arboleda Dr

Movement	EB	WB	NB	SB
Directions Served	LTR	LTR	LTR	LTR
Maximum Queue (ft)	35	36	6	6
Average Queue (ft)	21	19	0	0
95th Queue (ft)	44	44	6	4
Link Distance (ft)	788	1675	718	252
Upstream Blk Time (%)				
Queuing Penalty (veh)				
Storage Bay Dist (ft)				
Storage Blk Time (%)				
Queuing Penalty (veh)				

Intersection: 7: Arboleda Dr & Springer Rd

Movement	EB	NB
Directions Served	LR	LT
Maximum Queue (ft)	139	190
Average Queue (ft)	43	28
95th Queue (ft)	107	126
Link Distance (ft)	1675	363
Upstream Blk Time (%)		
Queuing Penalty (veh)		
Storage Bay Dist (ft)		
Storage Blk Time (%)		
Queuing Penalty (veh)		

Intersection: 8: Rosita Ave & Campbell Ave

Movement	EB	WB	NB	SB
Directions Served	LTR	LTR	LTR	LTR
Maximum Queue (ft)	61	45	49	34
Average Queue (ft)	33	25	4	1
95th Queue (ft)	54	47	25	15
Link Distance (ft)	733	396	488	718
Upstream Blk Time (%)				
Queuing Penalty (veh)				
Storage Bay Dist (ft)				
Storage Blk Time (%)				
Queuing Penalty (veh)				

Network Summary

Network wide Queuing Penalty: 327

Intersection: 1: S El Monte Ave & Cuesta Dr

Movement	EB	EB	B18	WB	WB	NE	NE	NE	SW	SW	SW
Directions Served	L	TR	T	L	TR	L	T	R	L	T	R
Maximum Queue (ft)	71	169	22	73	147	96	164	122	52	170	123
Average Queue (ft)	23	88	1	51	60	30	69	36	15	83	15
95th Queue (ft)	59	144	8	77	122	69	134	90	40	140	60
Link Distance (ft)		101	670		339		929			888	
Upstream Blk Time (%)		4									
Queuing Penalty (veh)		0									
Storage Bay Dist (ft)	50			50		75		100	100		100
Storage Blk Time (%)	1	19		17	8	0	4	0		3	0
Queuing Penalty (veh)	4	7		31	11	2	12	0		3	0

Intersection: 2: Arboleda Dr. & Cuesta Dr

Movement	WB	NB
Directions Served	LT	LR
Maximum Queue (ft)	25	35
Average Queue (ft)	2	11
95th Queue (ft)	17	35
Link Distance (ft)	1004	192
Upstream Blk Time (%)		
Queuing Penalty (veh)		
Storage Bay Dist (ft)		
Storage Blk Time (%)		
Queuing Penalty (veh)		

Intersection: 3: Campbell Ave & Cuesta Dr

Movement	EB	WB	NB
Directions Served	TR	LT	LR
Maximum Queue (ft)	139	90	61
Average Queue (ft)	76	47	31
95th Queue (ft)	117	73	54
Link Distance (ft)	1004	356	252
Upstream Blk Time (%)			
Queuing Penalty (veh)			
Storage Bay Dist (ft)			
Storage Blk Time (%)			
Queuing Penalty (veh)			

Intersection: 4: Cuesta Dr & S. Clark Ave.

Movement	EB	SB
Directions Served	LT	LR
Maximum Queue (ft)	47	63
Average Queue (ft)	7	33
95th Queue (ft)	32	57
Link Distance (ft)	356	632
Upstream Blk Time (%)		
Queuing Penalty (veh)		
Storage Bay Dist (ft)		
Storage Blk Time (%)		
Queuing Penalty (veh)		

Intersection: 5: Springer Rd. & Cuesta Dr

Movement	EB	EB	WB	WB	NB	NB	NB	SB	SB
Directions Served	LT	R	L	TR	L	T	R	L	TR
Maximum Queue (ft)	306	75	106	204	62	140	125	139	238
Average Queue (ft)	140	30	50	89	17	69	11	54	106
95th Queue (ft)	269	84	84	159	50	119	66	117	196
Link Distance (ft)	1272		213	213		234			851
Upstream Blk Time (%)				1					
Queuing Penalty (veh)				0					
Storage Bay Dist (ft)		50			50		100	125	
Storage Blk Time (%)	60	0			0	19	0	0	9
Queuing Penalty (veh)	14	1			1	28	0	0	12

Intersection: 6: Campbell Ave & Arboleda Dr

Movement	EB	WB	NB	SB
Directions Served	LTR	LTR	LTR	LTR
Maximum Queue (ft)	59	31	12	24
Average Queue (ft)	24	12	0	1
95th Queue (ft)	49	37	6	12
Link Distance (ft)	788	1675	718	252
Upstream Blk Time (%)				
Queuing Penalty (veh)				
Storage Bay Dist (ft)				
Storage Blk Time (%)				
Queuing Penalty (veh)				

Intersection: 7: Springer Rd. & Arboleda Dr

Movement	EB	NB	SB
Directions Served	LR	LT	TR
Maximum Queue (ft)	114	115	13
Average Queue (ft)	42	53	1
95th Queue (ft)	85	91	6
Link Distance (ft)	1675	363	234
Upstream Blk Time (%)			
Queuing Penalty (veh)			
Storage Bay Dist (ft)			
Storage Blk Time (%)			
Queuing Penalty (veh)			

Intersection: 8: Rosita Ave & Campbell Ave

Movement	EB	WB	NB	SB
Directions Served	LTR	LTR	LTR	LTR
Maximum Queue (ft)	50	40	24	18
Average Queue (ft)	28	20	1	1
95th Queue (ft)	47	45	12	10
Link Distance (ft)	733	396	488	718
Upstream Blk Time (%)				
Queuing Penalty (veh)				
Storage Bay Dist (ft)				
Storage Blk Time (%)				
Queuing Penalty (veh)				

Network Summary

Network wide Queuing Penalty: 126

Intersection: 1: S El Monte Ave & Cuesta Dr

Movement	EB	EB	B27	WB	WB	NE	NE	NE	SW	SW	SW
Directions Served	L	TR	T	L	TR	L	T	R	L	T	R
Maximum Queue (ft)	60	150	13	75	232	99	244	125	84	170	98
Average Queue (ft)	16	57	0	61	110	47	99	47	18	81	21
95th Queue (ft)	46	110	9	88	208	95	192	118	53	142	71
Link Distance (ft)		101	670		339		929			888	
Upstream Blk Time (%)		1									
Queuing Penalty (veh)		0									
Storage Bay Dist (ft)	50			50		75		100	75		75
Storage Blk Time (%)	1	9		21	20	2	10	0	0	6	0
Queuing Penalty (veh)	2	3		66	37	12	31	0	1	6	0

Intersection: 2: Arboleda Dr & Cuesta Dr

Movement	WB	NB
Directions Served	LT	LR
Maximum Queue (ft)	23	31
Average Queue (ft)	1	12
95th Queue (ft)	10	36
Link Distance (ft)	1004	192
Upstream Blk Time (%)		
Queuing Penalty (veh)		
Storage Bay Dist (ft)		
Storage Blk Time (%)		
Queuing Penalty (veh)		

Intersection: 3: Campbell Ave & Cuesta Dr

Movement	EB	WB	NB
Directions Served	TR	LT	LR
Maximum Queue (ft)	141	114	87
Average Queue (ft)	75	61	42
95th Queue (ft)	115	96	67
Link Distance (ft)	1004	356	252
Upstream Blk Time (%)			
Queuing Penalty (veh)			
Storage Bay Dist (ft)			
Storage Blk Time (%)			
Queuing Penalty (veh)			

Intersection: 4: Cuesta Dr & S Clark Ave

Movement	EB	WB	SB
Directions Served	LT	TR	LR
Maximum Queue (ft)	90	104	86
Average Queue (ft)	52	55	38
95th Queue (ft)	80	83	67
Link Distance (ft)	356	1272	632
Upstream Blk Time (%)			
Queuing Penalty (veh)			
Storage Bay Dist (ft)			
Storage Blk Time (%)			
Queuing Penalty (veh)			

Intersection: 5: Springer Rd. & Cuesta Dr

Movement	EB	WB	WB	B11	NB	NB	NB	SB	SB
Directions Served	LTR	L	TR	T	L	T	R	L	TR
Maximum Queue (ft)	439	68	249	18	75	247	125	109	170
Average Queue (ft)	188	32	123	1	32	145	61	39	81
95th Queue (ft)	434	57	222	13	84	266	164	76	136
Link Distance (ft)	1272	213	213	710		234			851
Upstream Blk Time (%)			3			5			
Queuing Penalty (veh)			0			28			
Storage Bay Dist (ft)					50		100	125	
Storage Blk Time (%)					0	55	1	0	2
Queuing Penalty (veh)					2	124	5	0	2

Intersection: 6: Campbell Ave & Arboleda Dr

Movement	EB	WB	NB	SB
Directions Served	LTR	LTR	LTR	LTR
Maximum Queue (ft)	31	40	68	75
Average Queue (ft)	23	19	37	36
95th Queue (ft)	43	44	55	56
Link Distance (ft)	788	1675	718	252
Upstream Blk Time (%)				
Queuing Penalty (veh)				
Storage Bay Dist (ft)				
Storage Blk Time (%)				
Queuing Penalty (veh)				

Intersection: 7: Arboleda Dr & Springer Rd.

Movement	EB	NB
Directions Served	LR	LT
Maximum Queue (ft)	148	191
Average Queue (ft)	49	37
95th Queue (ft)	157	147
Link Distance (ft)	1675	363
Upstream Blk Time (%)		
Queuing Penalty (veh)		
Storage Bay Dist (ft)		
Storage Blk Time (%)		
Queuing Penalty (veh)		

Intersection: 8: Rosita Ave & Campbell Ave

Movement	EB	WB	NB	SB
Directions Served	LTR	LTR	LTR	LTR
Maximum Queue (ft)	54	53	77	77
Average Queue (ft)	32	25	38	38
95th Queue (ft)	50	49	61	60
Link Distance (ft)	733	396	488	718
Upstream Blk Time (%)				
Queuing Penalty (veh)				
Storage Bay Dist (ft)				
Storage Blk Time (%)				
Queuing Penalty (veh)				

Network Summary

Network wide Queuing Penalty: 320

Intersection: 1: S El Monte Ave & Cuesta Dr

Movement	EB	EB	B27	WB	WB	NE	NE	NE	SW	SW	SW
Directions Served	L	TR	T	L	TR	L	T	R	L	T	R
Maximum Queue (ft)	64	169	27	74	160	96	181	124	64	177	100
Average Queue (ft)	22	86	2	52	67	31	65	36	17	86	19
95th Queue (ft)	58	145	18	79	127	69	127	88	48	151	67
Link Distance (ft)		101	670		339		929			888	
Upstream Blk Time (%)		3									
Queuing Penalty (veh)		0									
Storage Bay Dist (ft)	50			50		75		100	75		75
Storage Blk Time (%)	1	18		16	9	1	4	0	0	8	0
Queuing Penalty (veh)	4	6		29	12	5	10	1	0	8	0

Intersection: 2: Arboleda Dr & Cuesta Dr

Movement	EB	WB	NB
Directions Served	TR	LT	LR
Maximum Queue (ft)	6	27	31
Average Queue (ft)	0	1	10
95th Queue (ft)	4	14	33
Link Distance (ft)	101	1004	192
Upstream Blk Time (%)			
Queuing Penalty (veh)			
Storage Bay Dist (ft)			
Storage Blk Time (%)			
Queuing Penalty (veh)			

Intersection: 3: Campbell Ave & Cuesta Dr

Movement	EB	WB	NB
Directions Served	TR	LT	LR
Maximum Queue (ft)	151	86	58
Average Queue (ft)	79	44	31
95th Queue (ft)	124	70	50
Link Distance (ft)	1004	356	252
Upstream Blk Time (%)			
Queuing Penalty (veh)			
Storage Bay Dist (ft)			
Storage Blk Time (%)			
Queuing Penalty (veh)			

Intersection: 4: Cuesta Dr & S Clark Ave

Movement	EB	WB	SB
Directions Served	LT	TR	LR
Maximum Queue (ft)	76	97	59
Average Queue (ft)	46	48	32
95th Queue (ft)	69	74	54
Link Distance (ft)	356	1272	632
Upstream Blk Time (%)			
Queuing Penalty (veh)			
Storage Bay Dist (ft)			
Storage Blk Time (%)			
Queuing Penalty (veh)			

Intersection: 5: Springer Rd & Cuesta Dr

Movement	EB	WB	WB	NB	NB	NB	SB	SB
Directions Served	LTR	L	TR	L	T	R	L	TR
Maximum Queue (ft)	330	117	184	65	149	122	149	216
Average Queue (ft)	151	51	90	16	67	9	52	98
95th Queue (ft)	297	89	156	44	118	62	112	166
Link Distance (ft)	1272	213	213		234			851
Upstream Blk Time (%)			0					
Queuing Penalty (veh)			0					
Storage Bay Dist (ft)				50		100	125	
Storage Blk Time (%)				0	17	0	0	5
Queuing Penalty (veh)				1	26	0	1	6

Intersection: 6: Campbell Ave & Arboleda Dr

Movement	EB	WB	NB	SB
Directions Served	LTR	LTR	LTR	LTR
Maximum Queue (ft)	70	31	60	66
Average Queue (ft)	25	12	29	35
95th Queue (ft)	52	37	48	52
Link Distance (ft)	788	1675	718	252
Upstream Blk Time (%)				
Queuing Penalty (veh)				
Storage Bay Dist (ft)				
Storage Blk Time (%)				
Queuing Penalty (veh)				

Intersection: 7: Arboleda Dr & Springer Rd

Movement	EB	NB	SB
Directions Served	LR	LT	TR
Maximum Queue (ft)	125	125	22
Average Queue (ft)	48	57	1
95th Queue (ft)	95	101	10
Link Distance (ft)	1675	363	234
Upstream Blk Time (%)			
Queuing Penalty (veh)			
Storage Bay Dist (ft)			
Storage Blk Time (%)			
Queuing Penalty (veh)			

Intersection: 8: Rosita Ave & Campbell Ave

Movement	EB	WB	NB	SB
Directions Served	LTR	LTR	LTR	LTR
Maximum Queue (ft)	49	40	59	67
Average Queue (ft)	28	20	28	34
95th Queue (ft)	46	46	52	49
Link Distance (ft)	733	396	488	718
Upstream Blk Time (%)				
Queuing Penalty (veh)				
Storage Bay Dist (ft)				
Storage Blk Time (%)				
Queuing Penalty (veh)				

Network Summary

Network wide Queuing Penalty: 108

AWSC Warrant Criteria

Intersection ID:	6		
Criteria* Met:	**Yes**		
Current Control:	**Minor Street Stop**		
Major Street:	Campbell Ave.	***Direction:***	N/S
Minor Street:	Arboleda Dr.	***Direction:***	**E/W**

Analysis Provided by:
Alta Planning + Design

**Criteria established by 2014 CA MUTCD, Rev. 4, Section 2B.07, Effective: 03/29/2019*

Met?	Criteria	Input
No	**A. Interim Measure prior to Traffic Signal Installation**	
	Where traffic control signals are justified, the multi-way stop is an interim measure that can be installed quickly to control traffic while arrangements are being made for the isntallation of the traffic control signal.	
	Has a traffic signal warrant study been conducted for this intersection that:	No
	Temporary Multi-Way STOP Installation criteria satisified?	No
No	**B. 12-Month Crash History**	
	Five or ore reported crashes in a 12-month period that are susceptible to correction by a Multi-Way STOP installation. Such crashes include right-turn and left-turn collisions as well as right-angle collisions.	
	Total Number of crashes in 12-month period susceptible to correcton by a Multi-Way STOP:	2
	Multi-Way STOP Installation criteria satisified?	No
No	**C.** Minimum Volumes:	
	C.1. *The vehicular volume entering the intersection from the major street approaches (total of both approaches) averages at least 300 vehicles per hour for any 8 hours of an average day; and* ***C.2.*** *The combined vehicular, pedestrian, and bicycle volume entering the intersection from the minor street approaches (total of both approaches) averages at least 200 units per hour for the same 8 hours, with an average delay to minor-street vehicular traffic of at least 30 seconds per vehicle during the highest hour; but* ***C.3*** *If the 85th-percentile approach speed of the major-street traffic exceeds 40 mph, the minimum vehicular volume warrants are 70 percent of the values provided in Items 1 and 2.*	
No	**D.** Where no single criterion is satisfied, but where Criteria B, C.1, and C.2 are all satisfied to 80 percent of the minimum values (criterion C.3 is excluded from this condition).	

Traffic Data Input

85th Percentile Speed (mph) on Major Street:	34	**C.3 Permitted?**	No

Timeframe			Totals		Campbell Ave.		Arboleda Dr.				
Time Period	**Start**	**Stop**	**Major (Total):**	**Minor (Total):**	**North Bound Vehicles**	**South Bound Vehicles**	**East Bound Vehicles**	**East Bound Bicycles**	**West Bound Vehicles**	**West Bound Bicycles**	**Minor Street Pedestrians**
1	7:00	8:00	136	23	80	56	9	0	7	6	1
2	8:00	9:00	350	75	176	174	38	0	29	3	5
3	9:00	10:00	122	38	79	43	14	0	13	0	11
4	10:00	11:00	96	30	61	35	13	2	13	1	1
5	11:00	12:00	114	19	58	56	8	0	5	1	5
6	12:00	13:00	99	29	52	47	13	0	12	0	4
7	13:00	14:00	87	24	43	44	11	0	10	0	3
8	14:00	15:00	174	22	61	113	13	0	8	0	1
9	15:00	16:00	225	56	111	114	25	5	18	0	8
10	16:00	17:00	186	48	72	114	35	1	8	0	4
11	17:00	18:00	249	57	73	176	38	0	16	0	3
12	18:00	19:00	149	56	48	101	34	0	16	0	6
13	N/A	N/A	0	0	N/A	N/A	N/A	N/A	N/A	N/A	N/A
14	N/A	N/A	0	0	N/A	N/A	N/A	N/A	N/A	N/A	N/A
15	N/A	N/A	0	0	N/A	N/A	N/A	N/A	N/A	N/A	N/A
16	N/A	N/A	0	0	N/A	N/A	N/A	N/A	N/A	N/A	N/A
Number of Hours Met Criteria?			1	0			Peak Hour Average Delay (Minor Street)**:				11.6
Hours Met 70% Volumes (C.3)?			3	0							
Hours Met 80% Volumes (D)?			2	0							

***Average Vehicle Delay is measured in seconds per vehicle.*

No	*Major Street Volumes Met (C.1)?*
No	*Minor street volumes met with minor street delay criteria (C.2)?*
No	*70% Volumes met with speed criteria (C.3)?*
No	*80% of volumes met with collision criteria (D)?*

Optional Criteria (MUTCD)

Met?	Optional Criteria	Input
No	***A.*** *The need to control left-turn conflicts;*	
	Is the need to control left turns being considered?	Yes
	Are the majority of collisions (in Section B) left-turn related collisions?	No
	Do field conditions require mitigation against left turn Collisions?	No
Yes	***B.*** *The need to control vehicle/pedestrian conflicts near locations that generate high pedestrian volumes;*	
	Is the need to control pedestrian conflicts being considered?	Yes
	Nearby Pedestrian Generators:	
	Blach Int. Sch. / Covington Elem. Sch. / C.E.S. Back Entr. Path•	
	Can installation of a Multi-Way STOP better control vehicle/pedestrian conflicts at the intersection?	Yes
No	***C.*** *Locations where a road user, after stopping, cannot see conflicting traffic and is not able to negotiate the intersection unless conflicting cross traffic is also required to stop*	
	Are sight distance or geometric features being considered?	Yes
	Are there sight distance concerns or other geometric considerations that may be mitigated by an all-way stop control?	No
No	***D.*** *An intersection of two residential neighborhood collector (through) streets of similar design and operating characteristics where multi-way stop control would improve traffic operational characteristics of theintersection.*	
	Are operational characteristics of neighborhood collectors being considered?	Yes
	Major Street Roadway Classification:	Local
	Minor Street Roadway Classification:	Local
	Does a multi-way stop control improve operational characteristics of the intersection?	Yes

City Criteria (City of Los Altos, CA***)

Met?	City Criteria	Input

**Criteria established by City of Los Altos Stop Sign Policy, as established by the Public Works Department and City Council (2017)*

No *When the following criteria are satisfied, the intersection is considered to be located in a residential area and the volume warrant thresholds may be reduced by 60% of the MUTCD values:*

1. *Both streets have residential frontages with existing 25 mph speed limits*
2. *Neither street is classified as a collector or arterial street within the General Plan Circulation Element*
3. *Both streets are two-lane streets*
4. *No existing stop sign or signal is located on the more heavily traveled street within a distance of 200 feet, minimum*
5. *Intersection with streets extending 500 feet or more away from the intersection on at least three sides*
6. *Installation of a multi-way stop is compatible with the overall traffic circulation needs for the residential area*

Note: If this criteria is met, the failure to meet Section C or D of the MUTCD criteria section above shall not be considered as a part of this study. See MUTCD Criteria Section on the previous page of this report for the volume criteria to be considered.

Is the study interseciton within City bounds and are both intersection corridors within City ROW?	Yes
Corridor Speed Limits (MPH) [if different, input "N/A"]:	25
Major Street Roadway Classification:	Local
Minor Street Roadway Classification:	Local
Do bothintersection corridors have 2 lanes (one per direction)?	Yes
Nearest stop sign to the intersection (ft.):	275
Number of approaches that exceed 500 ft. beyond the intersection:	4
Is a multi-way stop control at the study intersection compatible with the overall traffic circulation needs for the area?	Yes

Does the intersection meet the criteria for the 60% volume threshold established by the City's stop sign policy?	Yes

Number of hours that meet the 60% volume criteria for the Major Street (C.1):	4	**Criteria C.1 met?**	No
Number of hours that meet the 60% volume criteria for the Minor Street (C.2):	0	**Criteria C.2 met?**	No
Number of hours that meet the 60%x70% volume criteria for the Major Street (C.3):	7		
Number of hours that meet the 60%x70% volume criteria for the Minor Street (C.3):	0	**Criteria C.3 met?**	No
Number of hours that meet the 60%x80% volume criteria for the Major Street (D):	6		
Number of hours that meet the 60%x80% volume criteria for the Minor Street (D):	0	**Criteria D met?**	No

Notes:

12 Hour counts were utilized to conduct the analysis. The 12 hours included both peak hours. Volume counts and speeds were collected in March, 2019.
Identified large traffic generator is the local schools, as this intersection is part of the SRTS walking routes.
Site Distances were not measured on the corridor as a part of this study.
•While the Covington Elementary School back entrance path is not a part of the SRTS maps, the public identified it as heavily used by students.

CERTIFICATION:

This Multi-Way STOP Analysis was determined in accordance with the recommendations set forth by the California - Manual on Uniform Traffic Control Devices (MUTCD) - 2014 Edition - Rev 4 and was conducted by a Registed Professional Engineer within the State of California and Approved by the City of Los Altos, CA.

[Insert PE Stamp Here]

AWSC Warrant Criteria

Intersection ID:	6		
Criteria* Met:	**Yes**		
Current Control:	**Minor Street Stop**		
Major Street:	Campbell Ave.	***Direction:***	N/S
Minor Street:	Arboleda Dr.	***Direction:***	**E/W**

Analysis Provided by:
Alta Planning + Design

**Criteria established by 2014 CA MUTCD, Rev. 4, Section 2B.07, Effective: 03/29/2019*

Met?	Criteria	Input
No	**A. Interim Measure prior to Traffic Signal Installation**	
	Where traffic control signals are justified, the multi-way stop is an interim measure that can be installed quickly to control traffic while arrangements are being made for the isntallation of the traffic control signal.	
	Has a traffic signal warrant study been conducted for this intersection that:	No
	Temporary Multi-Way STOP Installation criteria satisified?	No
No	**B. 12-Month Crash History**	
	Five or ore reported crashes in a 12-month period that are susceptible to correction by a Multi-Way STOP installation. Such crashes include right-turn and left-turn collisions as well as right-angle collisions.	
	Total Number of crashes in 12-month period susceptible to correcton by a Multi-Way STOP:	2
	Multi-Way STOP Installation criteria satisified?	No
No	**C.** Minimum Volumes:	
	C.1. *The vehicular volume entering the intersection from the major street approaches (total of both approaches) averages at least 300 vehicles per hour for any 8 hours of an average day; and* ***C.2.*** *The combined vehicular, pedestrian, and bicycle volume entering the intersection from the minor street approaches (total of both approaches) averages at least 200 units per hour for the same 8 hours, with an average delay to minor-street vehicular traffic of at least 30 seconds per vehicle during the highest hour; but* ***C.3*** *If the 85th-percentile approach speed of the major-street traffic exceeds 40 mph, the minimum vehicular volume warrants are 70 percent of the values provided in Items 1 and 2.*	
No	**D.** Where no single criterion is satisfied, but where Criteria B, C.1, and C.2 are all satisfied to 80 percent of the minimum values (criterion C.3 is excluded from this condition).	

Traffic Data Input

85th Percentile Speed (mph) on Major Street:	34	**C.3 Permitted?**	No

Timeframe			Totals		Campbell Ave.		Arboleda Dr.				
Time Period	**Start**	**Stop**	**Major (Total):**	**Minor (Total):**	**North Bound Vehicles**	**South Bound Vehicles**	**East Bound Vehicles**	**East Bound Bicycles**	**West Bound Vehicles**	**West Bound Bicycles**	**Minor Street Pedestrians**
1	7:00	8:00	136	23	80	56	9	0	7	6	1
2	8:00	9:00	350	75	176	174	38	0	29	3	5
3	9:00	10:00	122	38	79	43	14	0	13	0	11
4	10:00	11:00	96	30	61	35	13	2	13	1	1
5	11:00	12:00	114	19	58	56	8	0	5	1	5
6	12:00	13:00	99	29	52	47	13	0	12	0	4
7	13:00	14:00	87	24	43	44	11	0	10	0	3
8	14:00	15:00	174	22	61	113	13	0	8	0	1
9	15:00	16:00	225	56	111	114	25	5	18	0	8
10	16:00	17:00	186	48	72	114	35	1	8	0	4
11	17:00	18:00	249	57	73	176	38	0	16	0	3
12	18:00	19:00	149	56	48	101	34	0	16	0	6
13	N/A	N/A	0	0	N/A	N/A	N/A	N/A	N/A	N/A	N/A
14	N/A	N/A	0	0	N/A	N/A	N/A	N/A	N/A	N/A	N/A
15	N/A	N/A	0	0	N/A	N/A	N/A	N/A	N/A	N/A	N/A
16	N/A	N/A	0	0	N/A	N/A	N/A	N/A	N/A	N/A	N/A
Number of Hours Met Criteria?			1	0			Peak Hour Average Delay (Minor Street)**:				11.6
Hours Met 70% Volumes (C.3)?			3	0							
Hours Met 80% Volumes (D)?			2	0							

***Average Vehicle Delay is measured in seconds per vehicle.*

No	*Major Street Volumes Met (C.1)?*
No	*Minor street volumes met with minor street delay criteria (C.2)?*
No	*70% Volumes met with speed criteria (C.3)?*
No	*80% of volumes met with collision criteria (D)?*

Optional Criteria (MUTCD)

Met?	Optional Criteria	Input
No	***A.*** *The need to control left-turn conflicts;*	
	Is the need to control left turns being considered?	Yes
	Are the majority of collisions (in Section B) left-turn related collisions?	No
	Do field conditions require mitigation against left turn Collisions?	No
Yes	***B.*** *The need to control vehicle/pedestrian conflicts near locations that generate high pedestrian volumes;*	
	Is the need to control pedestrian conflicts being considered?	Yes
	Nearby Pedestrian Generators:	
	Blach Int. Sch. / Covington Elem. Sch. / C.E.S. Back Entr. Path•	
	Can installation of a Multi-Way STOP better control vehicle/pedestrian conflicts at the intersection?	Yes
No	***C.*** *Locations where a road user, after stopping, cannot see conflicting traffic and is not able to negotiate the intersection unless conflicting cross traffic is also required to stop*	
	Are sight distance or geometric features being considered?	Yes
	Are there sight distance concerns or other geometric considerations that may be mitigated by an all-way stop control?	No
No	***D.*** *An intersection of two residential neighborhood collector (through) streets of similar design and operating characteristics where multi-way stop control would improve traffic operational characteristics of theintersection.*	
	Are operational characteristics of neighborhood collectors being considered?	Yes
	Major Street Roadway Classification:	Local
	Minor Street Roadway Classification:	Local
	Does a multi-way stop control improve operational characteristics of the intersection?	Yes

City Criteria (City of Los Altos, CA***)

Met?	City Criteria	Input

**Criteria established by City of Los Altos Stop Sign Policy, as established by the Public Works Department and City Council (2017)*

No *When the following criteria are satisfied, the intersection is considered to be located in a residential area and the volume warrant thresholds may be reduced by 60% of the MUTCD values:*

1. *Both streets have residential frontages with existing 25 mph speed limits*
2. *Neither street is classified as a collector or arterial street within the General Plan Circulation Element*
3. *Both streets are two-lane streets*
4. *No existing stop sign or signal is located on the more heavily traveled street within a distance of 200 feet, minimum*
5. *Intersection with streets extending 500 feet or more away from the intersection on at least three sides*
6. *Installation of a multi-way stop is compatible with the overall traffic circulation needs for the residential area*

Note: If this criteria is met, the failure to meet Section C or D of the MUTCD criteria section above shall not be considered as a part of this study. See MUTCD Criteria Section on the previous page of this report for the volume criteria to be considered.

Is the study interseciton within City bounds and are both intersection corridors within City ROW?	Yes
Corridor Speed Limits (MPH) [if different, input "N/A"]:	25
Major Street Roadway Classification:	Local
Minor Street Roadway Classification:	Local
Do bothintersection corridors have 2 lanes (one per direction)?	Yes
Nearest stop sign to the intersection (ft.):	275
Number of approaches that exceed 500 ft. beyond the intersection:	4
Is a multi-way stop control at the study intersection compatible with the overall traffic circulation needs for the area?	Yes

Does the intersection meet the criteria for the 60% volume threshold established by the City's stop sign policy?	Yes

Number of hours that meet the 60% volume criteria for the Major Street (C.1):	4	**Criteria C.1 met?**	No
Number of hours that meet the 60% volume criteria for the Minor Street (C.2):	0	**Criteria C.2 met?**	No
Number of hours that meet the 60%x70% volume criteria for the Major Street (C.3):	7		
Number of hours that meet the 60%x70% volume criteria for the Minor Street (C.3):	0	**Criteria C.3 met?**	No
Number of hours that meet the 60%x80% volume criteria for the Major Street (D):	6		
Number of hours that meet the 60%x80% volume criteria for the Minor Street (D):	0	**Criteria D met?**	No

Notes:

12 Hour counts were utilized to conduct the analysis. The 12 hours included both peak hours. Volume counts and speeds were collected in March, 2019.
Identified large traffic generator is the local schools, as this intersection is part of the SRTS walking routes.
Site Distances were not measured on the corridor as a part of this study.
•While the Covington Elementary School back entrance path is not a part of the SRTS maps, the public identified it as heavily used by students.

CERTIFICATION:

This Multi-Way STOP Analysis was determined in accordance with the recommendations set forth by the California - Manual on Uniform Traffic Control Devices (MUTCD) - 2014 Edition - Rev 4 and was conducted by a Registed Professional Engineer within the State of California and Approved by the City of Los Altos, CA.

[Insert PE Stamp Here]

AWSC Warrant Criteria

Intersection ID:	8		
Criteria* Met:	**Yes**		
Current Control:	**Minor Street Stop**		
Major Street:	Campbell Ave.	***Direction:***	N/S
Minor Street:	Rosita Ave.	***Direction:***	**E/W**

Analysis Provided by:
Alta Planning + Design

**Criteria established by 2014 CA MUTCD, Rev. 4, Section 2B.07, Effective: 03/29/2019*

Met?	Criteria	Input
No	**A. Interim Measure prior to Traffic Signal Installation**	
	Where traffic control signals are justified, the multi-way stop is an interim measure that can be installed quickly to control traffic while arrangements are being made for the isntallation of the traffic control signal.	
	Has a traffic signal warrant study been conducted for this intersection that:	No
	Temporary Multi-Way STOP Installation criteria satisified?	No
No	**B. 12-Month Crash History**	
	Five or ore reported crashes in a 12-month period that are susceptible to correction by a Multi-Way STOP installation. Such crashes include right-turn and left-turn collisions as well as right-angle collisions.	
	Total Number of crashes in 12-month period susceptible to correcton by a Multi-Way STOP:	1
	Multi-Way STOP Installation criteria satisified?	No
No	**C.** Minimum Volumes:	
	C.1. *The vehicular volume entering the intersection from the major street approaches (total of both approaches) averages at least 300 vehicles per hour for any 8 hours of an average day; and* ***C.2.*** *The combined vehicular, pedestrian, and bicycle volume entering the intersection from the minor street approaches (total of both approaches) averages at least 200 units per hour for the same 8 hours, with an average delay to minor-street vehicular traffic of at least 30 seconds per vehicle during the highest hour; but* ***C.3*** *If the 85th-percentile approach speed of the major-street traffic exceeds 40 mph, the minimum vehicular volume warrants are 70 percent of the values provided in Items 1 and 2.*	
No	**D.** Where no single criterion is satisfied, but where Criteria B, C.1, and C.2 are all satisfied to 80 percent of the minimum values (criterion C.3 is excluded from this condition).	

Traffic Data Input

85th Percentile Speed (mph) on Major Street:	33	**C.3 Permitted?**	No

Timeframe			Totals		Campbell Ave.		Rosita Ave.				
Time Period	**Start**	**Stop**	**Major (Total):**	**Minor (Total):**	**North Bound Vehicles**	**South Bound Vehicles**	**East Bound Vehicles**	**East Bound Bicycles**	**West Bound Vehicles**	**West Bound Bicycles**	**Minor Street Pedestrians**
1	7:00	8:00	122	50	60	62	15	1	28	1	5
2	8:00	9:00	322	141	120	202	75	2	48	3	13
3	9:00	10:00	95	64	51	44	30	2	23	1	8
4	10:00	11:00	78	43	46	32	20	0	18	2	3
5	11:00	12:00	96	57	34	62	26	1	20	1	9
6	12:00	13:00	85	44	40	45	28	0	15	0	1
7	13:00	14:00	76	42	40	36	18	1	19	1	3
8	14:00	15:00	166	46	54	112	22	0	22	0	2
9	15:00	16:00	189	95	70	119	66	2	25	0	2
10	16:00	17:00	176	59	62	114	40	1	13	0	5
11	17:00	18:00	205	90	47	158	58	1	30	0	1
12	18:00	19:00	122	28	37	85	13	1	12	2	0
13	N/A	N/A	0	0	N/A	N/A	N/A	N/A	N/A	N/A	N/A
14	N/A	N/A	0	0	N/A	N/A	N/A	N/A	N/A	N/A	N/A
15	N/A	N/A	0	0	N/A	N/A	N/A	N/A	N/A	N/A	N/A
16	N/A	N/A	0	0	N/A	N/A	N/A	N/A	N/A	N/A	N/A
Number of Hours Met Criteria?			1	0			Peak Hour Average Delay (Minor Street)**:				13.5
Hours Met 70% Volumes (C.3)?			1	1							
Hours Met 80% Volumes (D)?			1	0							

***Average Vehicle Delay is measured in seconds per vehicle.*

No	*Major Street Volumes Met (C.1)?*
No	*Minor street volumes met with minor street delay criteria (C.2)?*
No	*70% Volumes met with speed criteria (C.3)?*
No	*80% of volumes met with collision criteria (D)?*

Optional Criteria (MUTCD)

Met?	Optional Criteria	Input
No	***A.*** *The need to control left-turn conflicts;*	
	Is the need to control left turns being considered?	Yes
	Are the majority of collisions (in Section B) left-turn related collisions?	No
	Do field conditions require mitigation against left turn Collisions?	No
Yes	***B.*** *The need to control vehicle/pedestrian conflicts near locations that generate high pedestrian volumes;*	
	Is the need to control pedestrian conflicts being considered?	Yes
	Nearby Pedestrian Generators:	
	Blach Int. Sch. / Covington Elem. Sch. / Rosita Park / Rosita Ave. SUP	
	Can installation of a Multi-Way STOP better control vehicle/pedestrian conflicts at the intersection?	Yes
No	***C.*** *Locations where a road user, after stopping, cannot see conflicting traffic and is not able to negotiate the intersection unless conflicting cross traffic is also required to stop*	
	Are sight distance or geometric features being considered?	Yes
	Are there sight distance concerns or other geometric considerations that may be mitigated by an all-way stop control?	Unknown
No	***D.*** *An intersection of two residential neighborhood collector (through) streets of similar design and operating characteristics where multi-way stop control would improve traffic operational characteristics of theintersection.*	
	Are operational characteristics of neighborhood collectors being considered?	Yes
	Major Street Roadway Classification:	Local
	Minor Street Roadway Classification:	Local
	Does a multi-way stop control improve operational characteristics of the intersection?	Yes

City Criteria (City of Los Altos, CA***)

Met?	City Criteria	Input

**Criteria established by City of Los Altos Stop Sign Policy, as established by the Public Works Department and City Council (2017)*

No *When the following criteria are satisfied, the intersection is considered to be located in a residential area and the volume warrant thresholds may be reduced by 60% of the MUTCD values:*

1. *Both streets have residential frontages with existing 25 mph speed limits*
2. *Neither street is classified as a collector or arterial street within the General Plan Circulation Element*
3. *Both streets are two-lane streets*
4. *No existing stop sign or signal is located on the more heavily traveled street within a distance of 200 feet, minimum*
5. *Intersection with streets extending 500 feet or more away from the intersection on at least three sides*
6. *Installation of a multi-way stop is compatible with the overall traffic circulation needs for the residential area*

Note: If this criteria is met, the failure to meet Section C or D of the MUTCD criteria section above shall not be considered as a part of this study. See MUTCD Criteria Section on the previous page of this report for the volume criteria to be considered.

Is the study interseciton within City bounds and are both intersection corridors within City ROW?	Yes
Corridor Speed Limits (MPH) [if different, input "N/A"]:	25
Major Street Roadway Classification:	Local
Minor Street Roadway Classification:	Local
Do bothintersection corridors have 2 lanes (one per direction)?	Yes
Nearest stop sign to the intersection (ft.):	1000
Number of approaches that exceed 500 ft. beyond the intersection:	4
Is a multi-way stop control at the study intersection compatible with the overall traffic circulation needs for the area?	Yes

Does the intersection meet the criteria for the 60% volume threshold established by the City's stop sign policy?	Yes

Number of hours that meet the 60% volume criteria for the Major Street (C.1):	3	**Criteria C.1 met?**	No
Number of hours that meet the 60% volume criteria for the Minor Street (C.2):	1	**Criteria C.2 met?**	No
Number of hours that meet the 60%x70% volume criteria for the Major Street (C.3):	5		
Number of hours that meet the 60%x70% volume criteria for the Minor Street (C.3):	3	**Criteria C.3 met?**	No
Number of hours that meet the 60%x80% volume criteria for the Major Street (D):	5		
Number of hours that meet the 60%x80% volume criteria for the Minor Street (D):	1	**Criteria D met?**	No

Notes:

12 Hour counts were utilized to conduct the analysis. The 12 hours included both peak hours. Volume counts and speeds were collected in March, 2019.
Identified large traffic generator is the local schools, as this intersection is part of the SRTS walking routes.
Site Distances were not measured on the corridor as a part of this study.

CERTIFICATION:

This Multi-Way STOP Analysis was determined in accordance with the recommendations set forth by the California - Manual on Uniform Traffic Control Devices (MUTCD) - 2014 Edition - Rev 4 and was conducted by a Registed Professional Engineer within the State of California and Approved by the City of Los Altos, CA.

[Insert PE Stamp Here]

Date & Time	DMV/Case No.	Injury	Fatals	Road	Cross Street	Other_Road	Vehicle_ Involved_With	Pedestrians_ Action	Vehicle
4/9/2014 15:35	140409-1101	0	0	CUESTA DRIVE		ARBOLEDA DRIVE	Other Motor Vehicle	No Pedestrians Involved	A
7/4/2015 11:09	**150704-0839**	**0**	**0**	**CUESTA DRIVE**		**WEST CURB LINE S. CLARK AVENUE**	**Other Motor Vehicle**	**No Pedestrians Involved**	
5/17/2016 8:24	**160517-0583**	**2**	**0**	**CAMPBELL AVENUE**		**NORTH CURB LINE OF ARBOLEDA DRIVE**	**Other Motor Vehicle**	**No Pedestrians Involved**	
8/2/2016 8:30	**160802-0901**	**0**	**0**	**CUESTA DRIVE**	**S. CLARK AVENUE**		**Other Motor Vehicle**	**No Pedestrians Involved**	
8/17/2016 21:10	160817-0965	0	0	CUESTA DRIVE	EL MONTE AVENUE		Fixed Object - Signal Pole	No Pedestrians Involved	
11/8/2016 10:04	161108-1307	0	0	CUESTA DR		EL MONTE AVE	Other Motor Vehicle	No Pedestrians Involved	
1/9/2017 17:18	**170109-0033**	**0**	**0**	**CAMPBELL AVENUE**		**SOUTH CURB LINE ARBOLEDA DRIVE**	**Other Motor Vehicle**	**No Pedestrians Involved**	
3/10/2017 18:39	170310-0305	1	0	CUESTA DRIVE		EL MONTE AVENUE	NonCollision - Driver Fall From Vehicle	No Pedestrians Involved	
3/14/2017 17:48	**170314-0320**	**0**	**0**	**CUESTA DRIVE**	**S CLARK AVENUE**		**Other Motor Vehicle**	**No Pedestrians Involved**	
4/28/2017 18:59	170428-0475	1	0	CUESTA DRIVE	EL MONTE AVENUE		Other Motor Vehicle	No Pedestrians Involved	
6/6/2017 15:55	170606-0628	0	0	CUESTA DRIVE	S EL MONTE AVENUE		Other Motor Vehicle	No Pedestrians Involved	
9/7/2017 14:59	**170907-1003**	**1**	**0**	**CAMPBELL AVENUE**	**ROSITA AVENUE**			**No Pedestrians Involved**	
12/4/2017 15:26	171204-1381	1	0	CUESTA DRIVE	ARBOLEDA DRIVE		Other Motor Vehicle	No Pedestrians Involved	
1/28/2018 9:54	180128-0121	0	0	CUESTA DRIVE	S. EL MONTE AVENUE		Other Motor Vehicle	No Pedestrians Involved	
11/21/2017 9:30	180216-0203	0	0	CUESTA DRIVE	SPRINGER ROAD		Other Motor Vehicle	No Pedestrians Involved	
6/7/2018 21:05	180607-0660	0	0	CUESTA DR	S EL MONTE AVE		Other Motor Vehicle	No Pedestrians Involved	
7/14/2018 16:02	180714-0794	0	0	CUESTA DRIVE		POWERPOLE #120075534	Other Motor Vehicle	No Pedestrians Involved	
12/13/2018 17:02	181213-1393	0	0	338 CUESTA DRIVE		S. EL MONTE AVENUE	Fixed Object - Mail Box	No Pedestrians Involved	

Data Provided by Los Altos Police Department
Analysis Conducted by Alta Planning + Design