PROJECT SUMMARY

PROJECT ADDRESS:	121 DOUD DRIVE, LOS ALTOS, CA. 94022
PROJECT DESCRIPTION:	IT IS INTENDED TO DEMOLISH AN EXISTING 2-STORY FLAT ROOF RANCH STYLE HOME WITH A DETACHED GARAGE AND CONSTRUCT A NEW 4,238 2-STORY WOOD FRAMED RESIDENCE WITH AN ATTACHED GARAGE
A.P.N.:	170-31-011
ZONING:	R1-10 SINGLE FAMILY DISTRICT
OCCUPANCY:	R-3 / U
LOT AREA:	14,880 S.F. / .35 ACRES
HISTORIC STATUS:	NO
STORIES:	(2) TWO
FIRE SPINKLERS:	YES
MAXIMUM LOT COVERAGE: 2 STORY DEVELOPMENT	4,464 S.F. (30% OF LOT AREA)
MAX. FLOOR AREA (MFA):	4,238 S.F. (3,850 + 10% [LOT AREA-11,000])
HEIGHT LIMIT:	27 FT. FROM NATURAL GRADE
DAYLIGHT PLANE:	11FT. AT SIDE PROPERTY LINE, THEN SLOPE UPWARD @ 25° FROM THE HORIZONTAL
REQUIRED PARKING:	(2) SPACES @ MAIN RESIDENCE (1) SPACE TO BE COVERED

NOTE: SEE SHEET A4 FOR AREA DIAGRAMS AND CALCULATION BREAKDOWN

ZONING COMPLIANCE

	Existing	Proposed	Allowed/Required
LOT COVERAGE: *Land area covered by all structures that are over 6 feet in height*	2846 square feet (19.1 %)	3826 square feet (25.7 %)	4464 square feet (30.0 %)
FLOOR AREA: *Measured to the outside surfaces of exterior walls*	1st Flr: 2727 sq ft 2nd Flr: 535 sq ft **Total: 3262 sq ft** (21.9 %)	1st Flr: 3267 sq ft 2nd Flr: 970 sq ft **Total: 4237 sq ft** (28.5 %)	4238 square feet (28.5 %)
SETBACKS:			
Front	37'1" ± feet	35'0" feet	25'0" feet
Rear	46'1" ± feet	35'2" feet	25'0" feet
Right side (1st/2nd)	21'10" feet/71'7" feet	15'5.5" feet/34'2" feet	10'0" feet/17'6" feet
Left side (1st/2nd)	18'7" feet/18'-7 feet	11'4.5" feet/27'7" feet	10'0" feet/17'6" feet
HEIGHT:	22'-3" feet	26'-10" feet	27'-0" feet

SQUARE FOOTAGE BREAKDOWN

	Existing	Change in	Total Proposed
HABITABLE LIVING AREA: *Includes habitable basement areas*	2891 square feet	881 square feet	3772 square feet
NON- HABITABLE AREA: *Does not include covered porches or open structures*	371 square feet	94 square feet	465 square feet

LOT CALCULATIONS

NET LOT AREA:	14,880 square feet
FRONT YARD HARDSCAPE AREA: *Hardscape area in the front yard setback shall not exceed 50%*	887 square feet (32 %)
LANDSCAPING BREAKDOWN:	Total hardscape area (existing and proposed): 5437 sq ft Existing softscape (undisturbed) area: 7178 sq ft New softscape (new or replaced landscaping) area: 2265 sq ft *Sum of all three should equal the site's net lot area*

FIRE SPRINKLER SYSTEM SHALL BE REQUIRED AND INSTALLED PER NFPA 13D 2016 EDITION STANDARD.

1. POTABLE WATER SUPPLIES SHALL BE PROTECTED FROM CONTAMINATION CAUSE BY FIRE PROTECTION WATER SUPPLIES. IT IS THE RESPONSIBILITY OF THE APPLICANT AND ANY CONTRACTORS AND SUBCONTRACTORS TO CONTACT THE WATER PURVEYOR SUPPLYING THE SITE OF SUCH PROJECT, AND TO COMPLY WITH THE REQUIREMENTS OF THAT PURVEYOR. SUCH REQUIREMENTS SHALL BE INCORPORATED INTO THE DESIGN OF ANY WATER BASED FIRE PROTECTION SYSTEMS, AND / OR FIRE SUPPRESSION WATER SUPPLY SYSTEMS OR STORAGE CONTAINERS THAT MAY BE PHYSICALLY CONNECTED IN ANY MANNER TO AN APPLIANCE CAPABLE OF CAUSING CONTAMINATION OF THE POTABLE WATER SUPPLY OF THE PURVEYOR OF RECORD. FINAL APPROVAL OF THE SYSTEM(S) UNDER CONSIDERATION WILL NOT BE GRANTED BY THIS OFFICE UNTIL COMPLIANCE WITH THE REQUIREMENTS OF THE WATER PURVEYOR OF RECORD ARE DOCUMENTED BY THAT PURVEYOR AS HAVING BEEN MET BY THE APPLICANT(S). 2016 CFC SEC. 903.3.5 AND HEALTH AND SAFETY CODE 13114.7
2. NEW AND EXISTING BUILDINGS SHALL HAVE APPROVED ADDRESS NUMBERS, BUILDING NUMBERS OR APPROVED BUILDING IDENTIFICATION PLACED IN A POSITION THAT IS PLAINLY LEGIBLE AND VISIBLE FROM THE STREET OR ROAD FRONTING THE PROPERTY. THESE NUMBERS SHALL CONTRAST WITH THEIR BACKGROUND. WHERE REQUIRED BY THE FIRE CODE OFFICIAL, ADDRESS NUMBERS SHALL BE PROVIDED IN ADDITIONAL APPROVED LOCATIONS TO FACILITATE EMERGENCY RESPONSE. ADDRESS NUMBERS SHALL BE ARABIC NUMBERS OR ALPHABETIC LETTERS. NUMBERS SHALL BE A MINIMUM OF 4 INCHES HIGH WITH A MINIMUM STROKE WIDTH OF 0.5 IN. WHERE ACCESS IS BY MEANS OF A PRIVATE ROAD AND THE BUILDING CANNOT BE VIEWED FROM THE PUBLIC WAY A MONUMENT, POLE OR OTHER SIGN OR MEANS SHALL BE USED TO IDENTIFY THE STRUCTURE. ADDRESS NUMBERS SHALL BE MAINTAINED. CFC 505.1
3. Hours of Construction – No construction activity shall commence prior to 7:00 a.m. nor continue later than 5:30 p.m., Monday through Friday, Saturday 9:00 am to 3:00 pm. The term "construction activity" shall include any physical activity on the construction site or in the staging area, including the delivery of materials. In approving modified hours, the Chief Building Official may specifically designate and/or limit the activities permitted during the modified hours.
4. NO CONSTRUCTION ON SUNDAY OR THE CITY OBSERVED HOLIDAYS OF: Every Saturday and Sunday; January 1st, known as New Year's Day; January 19th, known as Martin Luther King, Jr. Day; the third Monday in February, known as Presidents Day (Washington's birthday); the last Monday in May, known as Memorial Day; July 3rd and July 4th, known as Independence Day; the first Monday in September, known as Labor Day; November 11th, known as Veterans' Day; the fourth Thursday in November, known as Thanksgiving Day; the Friday following Thanksgiving Day; December 25th, known as Christmas Day;
5. SANITARY FACILITIES - THE TEMPORARY SANITARY FACILITIES SHALL BE PLACES OUT OF VIEWS OF ADJACENT NEIGHBORING PROPERTIES. THE SANITARY FACILITIES MAY NOT BE LOCATED IN THE PUBLIC RIGHT OF WAY.
6. CLEAN-UP AREA - WHEN ON SITE CLEANING OF EQUIPMENT IS REQUIRED FOR CEMENT FORMS AND TRUCKS, PAINT BRUSHES, PLASTERING TOOLS, AND SUCH, THEN A CLEAN-UP AREA MUST BE SPECIFIED AND POSTED WITH A SIGN. THIS AREA MUST NOT BE LOCATED BENEATH ANY TREE'S CANOPY OR IN ANY PROPOSES PLANTING AREA. RUN OFF FROM THE CLEAN UP AREA CAN BE CONTAINED BY PROVIDING A TEMPORARY BASE OF WOOD CHIPS OR OTHER NATURAL ABSORBENT MATERIAL TO BE DISPOSED OF OFF SITE.

CITY COMMENTS

INDEMNITY AND HOLD HARMLESS

THE APPLICANT/OWNER AGREES TO INDEMNIFY, DEFEND, PROTECT, AND HOLD THE CITY HARMLESS FROM ALL COSTS AND EXPENSES, INCLUDING ATTORNEY'S FEES, INCURRED BY THE CITY OR HELD TO BE THE LIABILITY OF THE CITY IN CONNECTION WITH THE CITY'S DEFENSE OF ITS ACTION IN ANY PROCEEDINGS BROUGHT IN AN STATE OR FEDERAL COURT, CHALLENGING ANY OF THE CITY'S ACTION WITH RESPECT TO THE APPLICANTS PROJECT

PRIOR TO BUILDING OR DEMOLITION PERMIT

TREE PROTECTION FENCING SHALL BE INSTALLED AROUND THE DRIIPLINE, OR AS REQUIRED BY THE PROJECT ARBORIST, OF THE FOLLOWING TREES (NO. 1-3) AS REFERENCED IN THE ARBORIST REPORT. TREE PROTECTION FENCING SHALL BE CHAIN LINK AND A MINIMUM OF 5' IN HEIGHT WITH POSTS DRIVEN INTO GROUND AND SHALL NOT BE REMOVED UNTIL ALL BUILDING CONSTRUCTION HAS BEEN COMPLETED UNLESS APPROVED BY THE PLANNING DIVISION.

PRIOR TO BUILDING PERMIT SUBMITTAL

PROVIDE VERIFICATION THAT THE HOUSE WILL COMPLY WITH THE CALIFORNIA GREEN BUILDING STANDARDS PURSUANT TO SECTION 12.26 OF THE MUNICIPAL CODE AND PROVIDE A SIGNATURE FROM THE PROJECTS QUALIFIED GREEN BUILDING PROFESSIONAL DESIGNER/ARCHITECT AND PROPERTY OWNER.

SHOW THE LOCATION OF ANY NEW AIR CONDITIONING UNITS ON THE SITE PLAN AND THE MANUFACTURER'S SPECIFICATION SHOWING THE SOUND RATING FOR EACH UNIT.

ALL TREE PROTECTION FENCING SHALL BE CHAIN LINK AND A MINIMUM OF 5' IN HEIGHT WITH POSTS DRIVEN INTO GROUND AND SHALL NOT BE REMOVED UNTIL ALL BUILDING CONSTRUCTION HAS BEEN COMPLETED UNLESS APPROVED BY THE PLANNING DIVISION.

PRIOR TO FINAL INSPECTION

PRIOR TO FRAMING INSPECTION THE FINISHED ROOFING MATERIAL SHALL BE INSTALLED AND COMPLETED. A FRAME INSPECTION WILL BE DENIED AND YOU WILL BE REQUIRED TO MAKE AN ADDITIONAL APPT. ONCE THE FINISHED ROOFING MATERIAL IS COMPLETED.

SUBMIT VERIFICATION THAT THE HOUSE WAS BUILT IN COMPLIANCE WITH THE CITY'S GREEN BUILDING ORDINANCE (SECTION 12.26 OF THE MUNICIPAL CODE.)

LIST OF DRAWINGS

Label	Description
T1	TITLE SHEET, PROJECT SUMMARY, PLANNING DATA & GERNERAL NOTES
A-1	STREETSCAPE
A-2	NEIGHBORHOOD CONTEXT & STREETSCAPE ELEVATION
A-3	EXTERIOR 3D RENDERINGS
A-4	FLOOR AREA DIAGRAM AND CALCULATIONS
A-5	SITE PLAN AND TREE PROTECTION
A-6	EXISTING FLOOR PLAN & FRONT ELEVATION
A-7	EXISTING RIGHT & LEFT SIDE ELEVATIONS
A-8	PROPOSED 1ST FLOOR PLAN
A-9	PROPOSED 2ND FLOOR PLAN
A-10	PROPOSED FRONT & REAR ELEVATIONS
A-11	PROPOSED RIGHT & LEFT SIDE ELEVATIONS
A-12	ARCHITECTURAL DETAILS
A-13	SECTIONS A & B
A-14	SECTION C
A-15	SECTION D
A-16	PROPOSED ROOF PLAN
EM-1	
EM-2	
C0.1	CIVIL TITLE SHEET
C0.2	GRADING SPECIFICATIONS
C2.1	GRADING AND DRAINAGE PLAN
C3.1	GRADING DETAILS
C4.1	EROSION CONTROL PLAN
C4.2	EROSION CONTROL DETAILS
C4.3	CONSTRUCTION BEST MANAGEMENT PROCTICES
L1	LANDSCAPE PLAN

PARCEL MAP

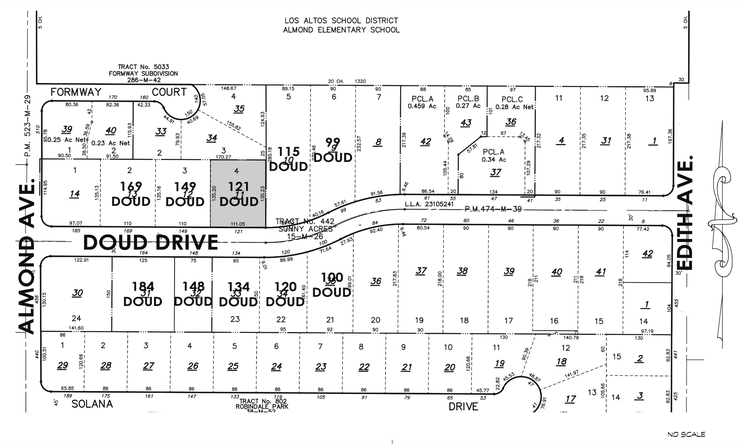

VICINITY MAP

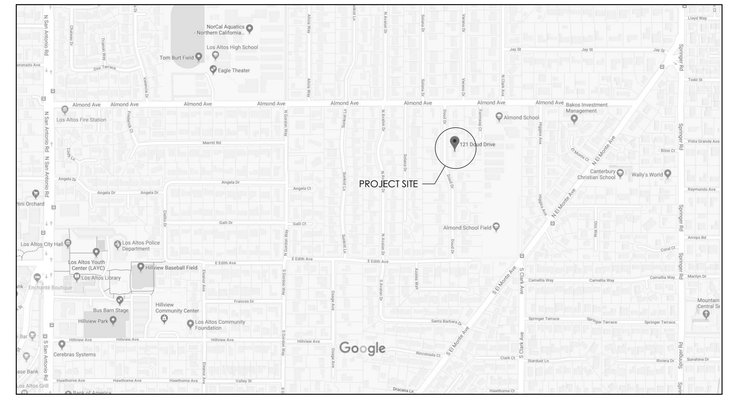

PROJECT CONSULTANTS

PROJECT DESIGNER	STRUCTURAL ENGINER
Design Discoveries **RESIDENTIAL BUILDING DESIGN** **Christopher J. Anderson** **1647 Quail Court** **Livermore, CA 94550** **(650) 996-3489** **Andarch@me.com**	**A & E Design Services** **STRUCTURAL ENGINEER** **LICENSE# C038548** **Steve Neef** **2157 Fourth Street** **Livermore, CA 94550** **(925) 449-3883 - O**
TITLE-24 ANALYST	**SOILS ENGINEER**
ENERGY DESIGN GROUP **Green Building & Certified Energy Analyst** **Miles Hancock** **25 Devonshire Blvd, #2** **San Carlos, CA 94070** **(650) 804-9063** **Energy@pacbell.net**	**KAREN AITKEN & ASSOCIATES** **LANDSCAPE ARCHITECTURE & DESIGN** **KAREN AITKEN** **8262 RANCHO REAL** **GILROY, CA 95020** **(408) 842-0245** **KAREN@KAA.DESIGN**
ARBORIST	**SURVEYOR**
MONARCH CONSULTING ARBORISTS LLC **ASCA - REGISTERED CONSULTING ARBORIST** **RICHARD GESSNER** **P.O. BOX 1010** **FELTON, CA 95018** **(831) 331-8982**	**CLARK CIVIL ENGINEERING** **DESIGN - CONSULTING - SURVEY** **William C. Clark** **12700 Highway One** **Point Reyes Station, CA 94956** **(415) 295-4450 - O** **(510) 372-0259 - F**

GENERAL NOTES

All codes, ordinances and regulations - federal, state, and local city ordinances and building codes - take precedence over and part of these drawings which may conflict with these agencies' rules and/or regulations and must be adhered to, before and during construction, including and all fire codes. The plans shall comply with the 2019 CBC, CMC, CPC, CEC and CEES and local ordinances. The California Building Standards Code is based on:

2019 California Building & Fire Codes
(CCR TITLE 24 PART 2))
2019 California Plumbing & Mechanical Codes
(CCR TITLE 24 PART 4 & 5)
2019 California Electrical Code
(CCR TITLE 24 PART 3)
2019 California Residential Code*
(CCR TITLE 24 PART 2.5)
2019 California Green Building Standards Code
(California Building Standards Commission)
2019 California Building Energy Efficiency Standards
(Based on the 2016 California Energy Commission standards)

1. ***As of January 1, 2014, SB 407 (2009) requires non-compliant plumbing fixtures to be replaced by water-conserving plumbing fixtures when a property is undergoing alterations or improvements.***
2. ***These plans are intended to provide the basic construction information at site work, concrete work, plumbing, framing, mechanical and all other trades necessary to substantially complete this structure. This means these plans must be verified and checked by the builder or person in authority for the job. Any discrepancy, error or omission, if found, it is to be brought immediately to the attention of the designer before and construction work, or purchase is made.***
3. ***Design layout, all structural elements, including piers, pier footings, retaining walls and shear walls, floor and roof beams, floor and roof trusses, rafters, floor and ceiling joists, stud walls, columns and column footing and concrete floors must be sized and designed by a registered engineer. "DESIGN DISCOVERIES" and/or it's affiliates will not be responsible.***
4. ***All dimensions are to be verified by contractor prior to starting the work.***
5. ***Builder, owner to verify location of unit in relation to building and property lines.***
6. ***Any discrepancies between the plans and specifications shall be brought to the attention of the Designer prior to commencement of the work.***
7. ***These plans and their use are the property of DESIGN DISCOVERIES" and are not to be reproduced or reused without the written permission from "DESIGN DISCOVERIES".***
8. ***No storage of construction or household materials is permitted in the public right-of-way. this includes storage containers, dumpsters, trailers, etc."***
9. ***Water shall be available on site for dust control during all grading operations.***
10. ***Sanitary facilities - the temporary sanitary facilities shall be places out of views of adjacent neighboring properties. the sanitary facilities may not be located in the public right of way.***
11. ***Clean-up area - when on site cleaning of equipment is required for cement forms and trucks, paint brushes, plastering tools, and such, then a clean-up area must be specified and posted with a sign. this area must not be located beneath any tree's canopy or in any proposes planting area. run off from the clean up area can be contained by providing a temporary base of wood chips or other natural absorbent material to be disposed of off site.***

REVISIONS	BY:

These plans and their use are the property of Design Discoveries" and are not to be reproduced or reused without the written permission from Design Discoveries". These plans are intended to provide the basic construction information in site work, concrete work, plumbing, framing, mechanical and all other trades necessary to substantially complete this structure. This means these plans must be verified and checked completely by the builder or person in authority for the job. Any discrepancy, error or omission, if found, it to be brought immediately to the attention of the designer before and construction work, or purchase is made.

DESIGN DISCOVERIES
Residential Building Design
Custom Homes • Remodels • Additions • Kitchens & Baths
1647 Quail Court • Livermore, CA 94550
(650) • 996 • 5489 cell AndArchi@Me.com
Christopher J. Anderson

A NEW RESIDENCE FOR:
ALEX AND SOO KIM
121 DOUD DRIVE
LOS ALTOS, CA 94022

DATE:	7/22/2020
SCALE:	NO SCALE
SHEET:	**T1**

169 DOUD

149 DOUD

121 DOUD

115 DOUD

99 DOUD

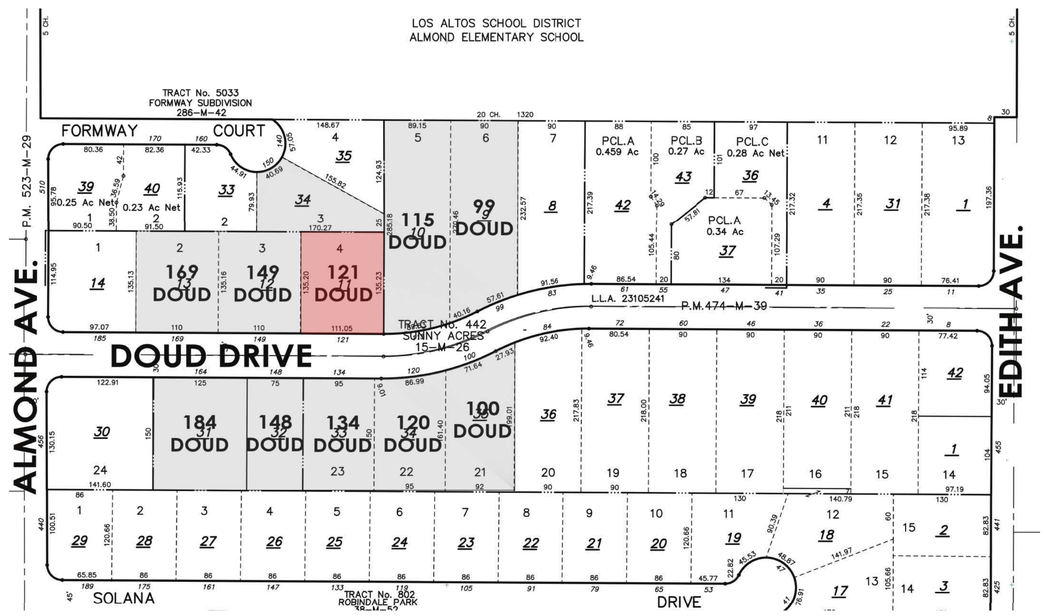

184 DOUD

148 DOUD

134 DOUD

120 DOUD

100 DOUD

REVISIONS	BY:

These plans and their use are the property of Design Discoveries® and are not to be reproduced or reused without the written permission from Design Discoveries®. These plans are intended to provide the basic construction information in site work, concrete work, plumbing, framing, mechanical and all other trades necessary to substantially complete this structure. This means these plans must be verified and checked completely by the builder or person in authority for the job. Any discrepancy, error or omission, if found, it to be brought immediately to the attention of the designer before and construction work, or purchase is made.

DESIGN DISCOVERIES
Residential Building Design
Custom Homes • Remodels • Additions • Kitchens & Baths
1647 Quail Court • Livermore, CA 94550
(650) • 996• 5489 cell AndArchi@Me.com
Christopher J. Anderson

A NEW RESIDENCE FOR:
ALEX AND SOO KIM
121 DOUD DRIVE
LOS ALTOS, CA 94022

DATE: 7/21/2020

SCALE: NO SCALE

SHEET: A-1

121 DOUD
FRONT ELEVATION

115 DOUD
FRONT ELEVATION

REVISIONS	BY:

These plans and their use are the property of Design Discoveries® and are not to be reproduced or reused without the written permission from Design Discoveries®. These plans are intended to provide the basic construction information in site work, concrete work, plumbing, framing, mechanical and all other trades necessary to substantially complete this structure. This means these plans must be verified and checked completely by the builder or person in authority for the job. Any discrepancy, error or omission, if found, it to be brought immediately to the attention of the designer before and construction work, or purchase is made.

DESIGN DISCOVERIES
Residential Building Design
Custom Homes • Remodels • Additions • Kitchens & Baths
1647 Quail Court • Livermore, CA 94550
(650) • 996- 5489 cell AndArchi@Me.com
Christopher J. Anderson

A NEW RESIDENCE FOR:
ALEX AND SOO KIM
121 DOUD DRIVE
LOS ALTOS, CA 94022

DATE:	7/17/2020
SCALE:	1/8" = 1'-0"
SHEET:	A-2

FRONT ELEVATION RENDERING

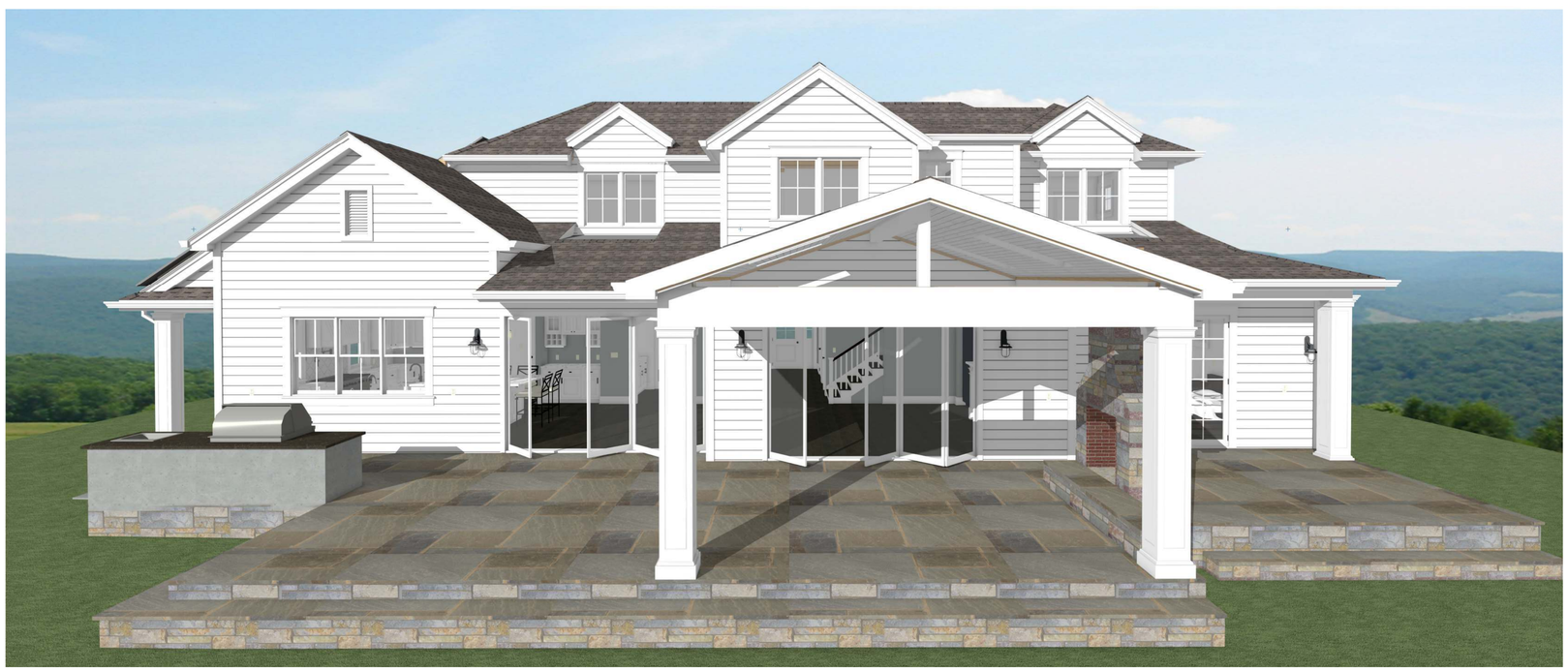

REAR ELEVATION RENDERING

REVISIONS	BY:

These plans and their use are the property of Design Discoveries® and are not to be reproduced or reused without the written permission from Design Discoveries®. These plans are intended to provide the basic construction information in site work, concrete work, plumbing, framing, mechanical and all other trades necessary to substantially complete this structure. This means these plans must be verified and checked completely by the builder or person in authority for the job. Any discrepancy, error or omission, if found, it to be brought immediately to the attention of the designer before and construction work, or purchase is made.

DESIGN DISCOVERIES
Residential Building Design
Custom Homes • Remodels • Additions • Kitchens & Baths
1647 Quail Court • Livermore, CA 94550
(650) • 996• 5489 cell AndArchi@Me.com

Christopher J. Anderson

A NEW RESIDENCE FOR:
ALEX AND SOO KIM
121 DOUD DRIVE
LOS ALTOS, CA 94022

DATE:
7/17/2020
SCALE:
NO SCALE
SHEET:
A-3

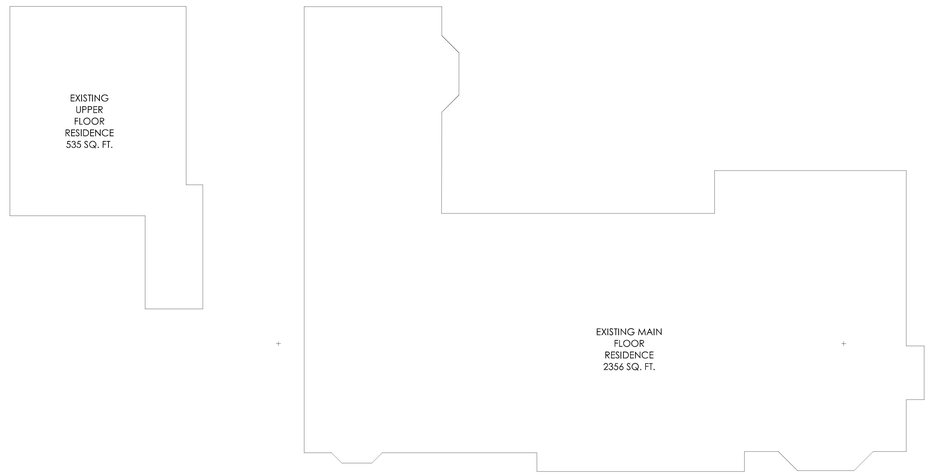

EXISTING HOUSE FLOOR AREA DIAGRAM

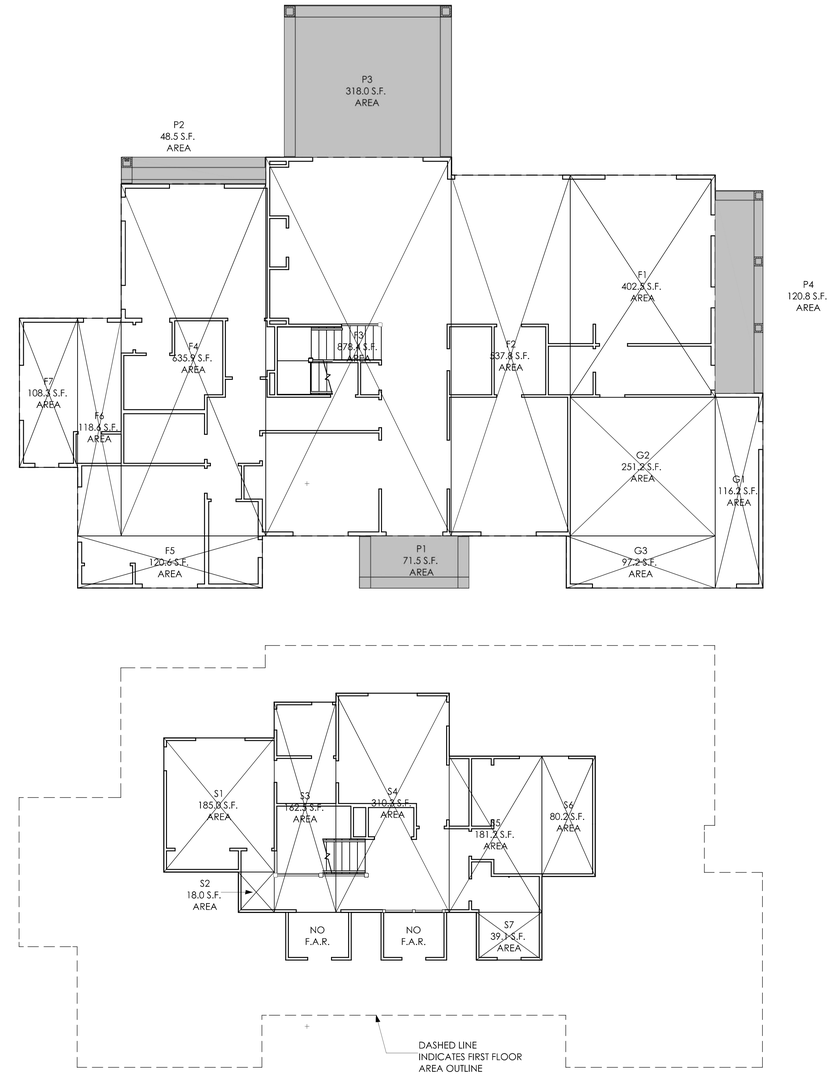

FLOOR AREAS		
GARAGE FLOOR AREA		
NAME	**DIMENSIONS**	**AREA**
G1	5'-4" x 21'-9.5"	116.2 S.F.
G2	16'-2.5" x 15'-6"	251.2 S.F.
G3	16'-8" x 5'-10"	97.2 S.F.
SUBTOTAL		464.6
FIRST FLOOR LIVING AREA		
NAME	**DIMENSIONS**	**AREA**
F1	16'-2.5" x 24'-10"	402.5 S.F.
F2	13'-4' x 40'-4"	537.8 S.F.
F3	20'-9" x 42'-4"	878.4 S.F.
F4	16'-2" x 39'-4"	635.9 S.F.
F5	20'-8" x 5'-10"	120.6 S.F.
F6	4'-10.5' x 24'-4"	118.6 S.F.
F7	6'-11" x 16'-8"	108.3 S.F.
SUBTOTAL		2802.1 S.F.
SECOND FLOOR LIVING AREA		
NAME	**DIMENSIONS**	**AREA**
S1	12'-4" x 15'-0"	185.0 S.F.
S2	4'-0" x 4'-6"	18.0 S.F.
S3	6'-11" x 23'-6"	162.5 S.F.
S4	12'-8" x 24'-6"	310.3 S.F.
S5	10'-4.5' x 17'-5.5"	181.5 S.F.
S6	5'-11.5" x 13'-5.5"	80.2 S.F.
S7	7'-4" x 5'-4"	32.0 S.F.
SUBTOTAL		969.5 S.F.
TOTAL FLOOR AREA		4237 S.F < 4238 S.F.

LOT COVERAGE	
FIRST FLOOR AREA	
G1-G3	464.6 S.F.
F1-F6	2802.1 S.F.
SUBTOTAL	3266.7
PORCH AREA	
NAME	**DIMENSIONS** / **AREA**
P1	12'-3" x 5'-10" / 71.5 S.F.
P2	16'-2" x 2'-6" / 48.5 S.F.
P3	18'-8.5" x 18'-0" / 318.0 S.F.
P4	5'-4' x 23'-8" / 120.8 S.F.
SUBTOTAL	558.8 S.F.
TOTAL	3266.7 +558.8 = 3825.5 S.F.
TOTAL LOT COVERAGE	3826 S.F < 4464 S.F.

LOT AREA	14,880 S.F.
MAX. LOT COVERAGE	4,464 S.F.
MAX. FLOOR AREA	4,238 S.F.

floor area diagram

REVISIONS	BY:

These plans and their use are the property of Design Discoveries" and are not to be reproduced or reused without the written permission from Design Discoveries". These plans are intended to provide the basic construction information in site work, concrete work, plumbing, framing, mechanical and all other trades necessary to substantially complete this structure. This means these plans must be verified and checked completely by the builder or person in authority for the job. Any discrepancy, error or omission, if found, it to be brought immediately to the attention of the designer before and construction work, or purchase is made.

DESIGN DISCOVERIES
Residential Building Design
Custom Homes • Remodels • Additions • Kitchens & Baths
1647 Quail Court • Livermore, CA 94550
(650) • 996 • 5489 cell AndArchi@Me.com
Christopher J. Anderson

A NEW RESIDENCE FOR:
ALEX AND SOO KIM
121 DOUD DRIVE
LOS ALTOS, CA 94022

DATE: 7/21/2020

SCALE: 1/8" = 1'-0"

SHEET: **A-4**

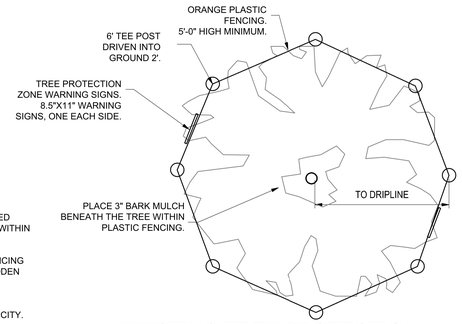

RESTRICTED USE PROTECTION:

1. METHOD TO BE USED IN RESTRICTED AREAS WHERE CONSTRUCTION IS WITHIN THE DRIPLINE OF A TREE.
2. 2 INCHES OF ORANGE PLASTIC FENCING OVERLAID WITH 2-INCH THICK WOODEN SLATS AROUND THE TRUNK.
3. LOCATIONS FOR RESTRICTED USE PROTECTION TO BE APPROVED BY CITY.

1 EXISTING TREE PROTECTION

NO SCALE

1. TREE PRESERVATION NOTES:
2. TREES WITHIN THE LIMIT OF WORK WHICH ARE NOT BEING REMOVED, SHALL BE FENCED AND PROTECTED BEFORE DEMOLITION, GRADING OR CONSTRUCTION BEGINS.
3. FENCING MAY OCCUR AT THE COMBINED DRIPLINES OF GROVES OF TREES. PLACE 3" BARK MULCH BENEATH TREES TO BE PRESERVED WITHIN 10FT OF TRUNK.
4. FENCING SHALL BE A 5'-0" HIGH MINIMUM FENCING WITH STEEL POSTS IMBEDDED IN THE GROUND.
5. NO GRADING SHALL OCCUR WITHIN THE FENCED AREA OF EXISTING TREES. DIGGING IN THE AREA UNDER THE EXISTING TREES THAT IS DESIGNATED TO RECEIVE PAVERS SHALL BE BY HAND UNLESS OTHERWISE AUTHORIZED BY THE CITY ARBORIST.
6. FENCING PLACEMENT SHALL BE COORDINATED WITH THE LIMITS OF PROPOSED PAVING IMPROVEMENTS.
7. NO CONSTRUCTION MATERIALS OR CONSTRUCTION VEHICLES MAY BE STORED WITHIN THE FENCING AREA OF EXISTING TREES.
8. CONSTRUCTION VEHICLES OR MACHINERY MAY NOT PASS BETWEEN TWO OR MORE EXISTING TREES IDENTIFIED FOR PRESERVATION IF THEIR CANOPIES ARE WITHIN 10 FEET OF TOUCHING. ADDITIONAL FENCING MAY BE REQUIRED BY THE CITY TO ENFORCE THIS.
9. TREE PRESERVATION MEASURES MUST BE IN PLACE BEFORE CONSTRUCTION, DEMOLITION AND/OR GRADING ACTIVITIES COMMENCE. CITY OF LOS ALTOS WILL STOP CONSTRUCTION IF TREE PRESERVATION MEASURES ARE NOT IN PLACE AND MAINTAINED THROUGHOUT THE CONSTRUCTION PERIOD.
10. THE CONTRACTOR IS REQUIRED TO HAVE AN ARBORIST CERTIFIED BY THE INTERNATIONAL SOCIETY OF ARBORICULTURE (JSA) ON SITE, IF SITE CONSTRUCTION EFFORTS REQUIRE REMOVAL OF EXISTING ROOTS OR BRANCH PRUNING. A CERTIFIED ARBORIST, APPROVED BY THE CITY, SHALL BE ON SITE AND MONITOR ALL ROOT PRUNING AND BRANCH PRUNING OF EXISTING HERITAGE TREES.
11. UNAUTHORIZED TREE REMOVAL IS SUBJECT TO IN-KIND REPLACEMENT EQUAL TO THE MATURE RESOURCE LOST, AS DETERMINED BY THE CITY.
12. THE CONTRACTOR IS REQUIRED TO WATER, FERTILIZE AND ATTEND TO OTHER MAINTENANCE NEEDS OF EXISTING TREES AS NEEDED TO MAINTAIN HEALTHY GROWTH THROUGHOUT THE CONSTRUCTION PERIOD. SIX FEET DIAMETER, MINIMUM, BY SIX-INCH TALL EARTH BERMS SHALL BE CONSTRUCTED AT THE BASE OF EACH TREE TO FUNCTION AS TEMPORARY WATERING DURING THE CONSTRUCTION PERIOD. TREES SHALL BE WATERED ACCORDING TO WEATHER AND TREE REQUIREMENTS.

TREE REMOVAL AND PLANTING TABLE

TREE #	SIZE	SPECIES	STATUS	NEW TREE	CATAGORY III SPECIES
#1	6"	BIRCH	RETAIN		
#2	4"	BIRCH	RETAIN		
#3	6"	BIRCH	RETAIN		
#4	6-10"	MULTI-TRUNK FIG	RETAIN		
#5	32"	REDWOOD	REMOVAL	(2) 24" BOX	PISTACIA CHINENSIS
#6	24"	REDWOOD	REMOVAL		
#7	12"	JUNIPER	REMOVAL	15 GAL.	PODOCARPUS
#8	8"	DEAD PERSIMMON	REMOVAL		
#9	8"	ASTRALIAN + WILLOW	REMOVAL	15 GAL.	PODOCARPUS
#10	8"	TRISTANIA	REMOVAL	15 GAL.	PODOCARPUS
#11	3"	JAP. MAPLE	RETAIN		
#12	4"	JAP. MAPLE	RETAIN		
#13	3"	JAP. MAPLE	RETAIN		
#14	40"	OAK	RETAIN		
#15	24"	OAK	RETAIN		

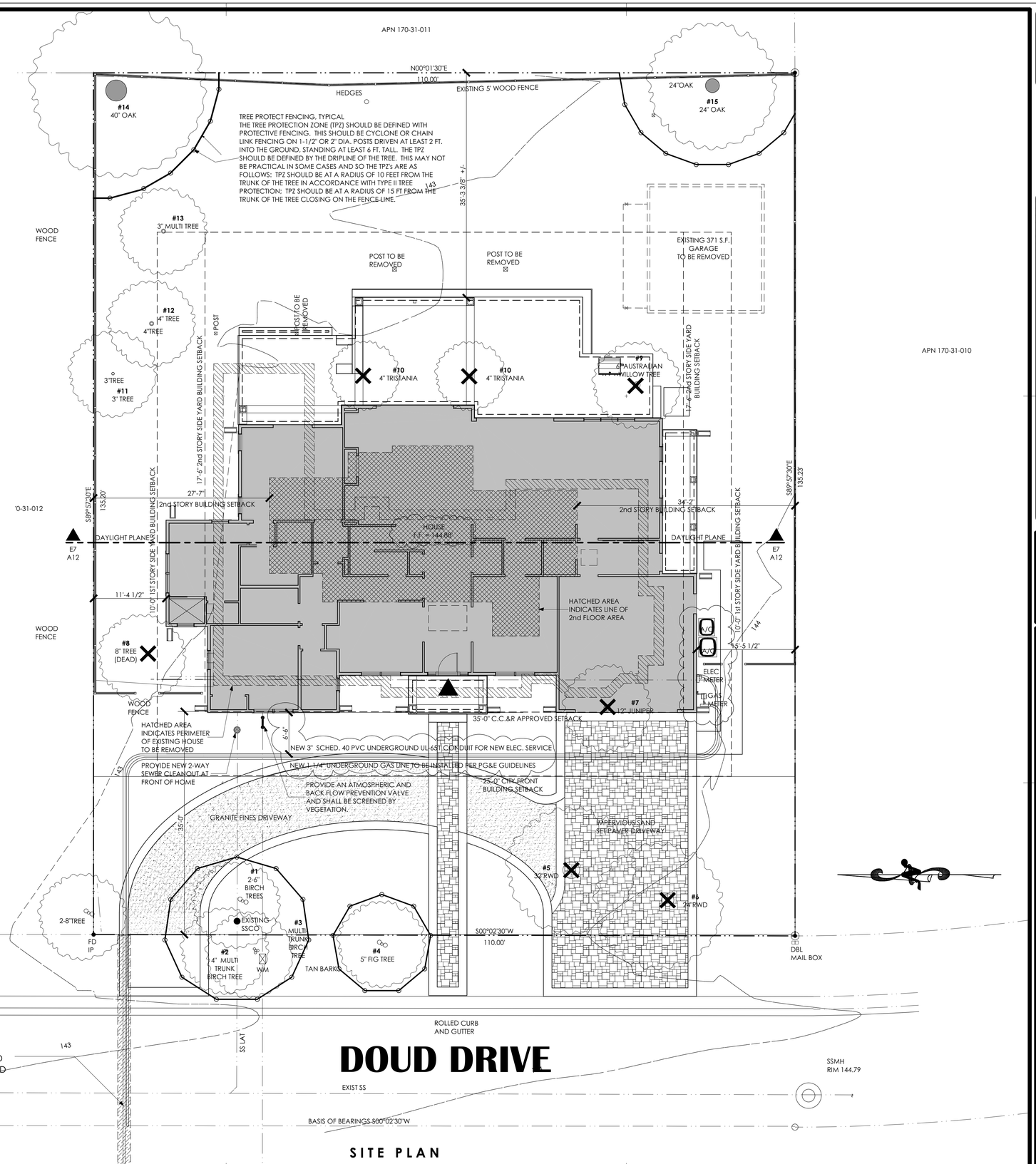

NOTE:
ALL EXISTING OVERHEAD UTILITIES (ELECTRIC, PHONE & CABLE) TO BE CHANGED TO UNDERGROUND FROM EXISTING JOINT POWER POLE ON WEST SIDE OF DOUD DRIVE. A DEFERRED SUBMITTAL SHALL BE REQUIRED BY THE CITY OF LOS ALTOS ENGINEERING DEPT. FOR ANY UNDERGROUND ROAD WORK THAT IS NECESSARY WITHIN THE RIGHT OF WAY.

SITE PLAN

REVISIONS	BY:

These plans and their use are the property of Design Discoveries® and are not to be reproduced or reused without the written permission from Design Discoveries®. These plans are intended to provide the basic construction information in site work, concrete work, plumbing, framing, mechanical and all other trades necessary to substantially complete this structure. This means these plans must be verified and checked completely by the builder or person in authority for the job. Any discrepancy, error or omission, if found, it to be brought immediately to the attention of the designer before and construction work, or purchase is made.

DESIGN DISCOVERIES
Residential Building Design
Custom Homes • Remodels • Additions • Kitchens & Baths
1647 Quail Court • Livermore, CA 94550
(650) • 996 • 5489 cell AndArchi@Me.com
Christopher J. Anderson

A NEW RESIDENCE FOR:
ALEX AND SOO KIM
121 DOUD DRIVE
LOS ALTOS, CA 94022

DATE:	8/7/2020
SCALE:	1/8" = 1'-0"
SHEET:	A-5

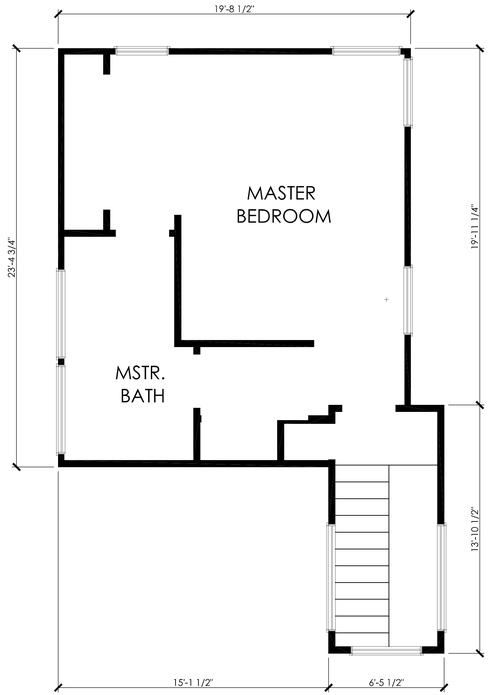

EXISTING 2ND FLOOR PLAN

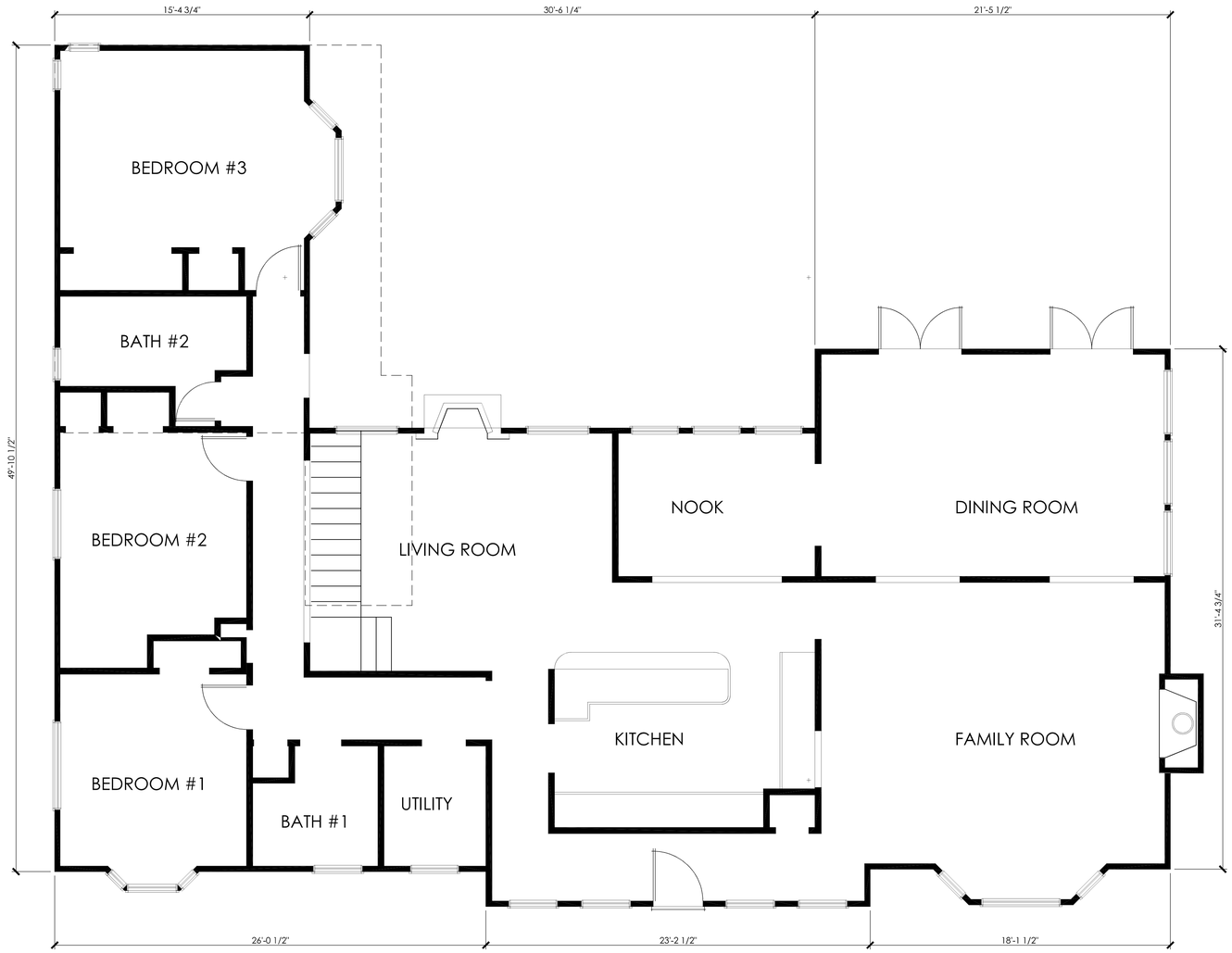

EXISTING 1ST FLOOR PLAN

REVISIONS	BY:

These plans and their use are the property of Design Discoveries® and are not to be reproduced or reused without the written permission from Design Discoveries®. These plans are intended to provide the basic construction information in site work, concrete work, plumbing, framing, mechanical and all other trades necessary to substantially complete this structure. This means these plans must be verified and checked completely by the builder or person in authority for the job. Any discrepancy, error or omission, if found, it to be brought immediately to the attention of the designer before and construction work, or purchase is made.

DESIGN DISCOVERIES
Residential Building Design
Custom Homes • Remodels • Additions • Kitchens & Baths
1647 Quail Court • Livermore, CA 94550
(650) • 996 • 5489 cell AndArchi@Me.com
Christopher J. Anderson

A NEW RESIDENCE FOR:
ALEX AND SOO KIM
121 DOUD DRIVE
LOS ALTOS, CA 94022

DATE:	7/21/2020
SCALE:	1/4" = 1'-0"
SHEET:	A-6

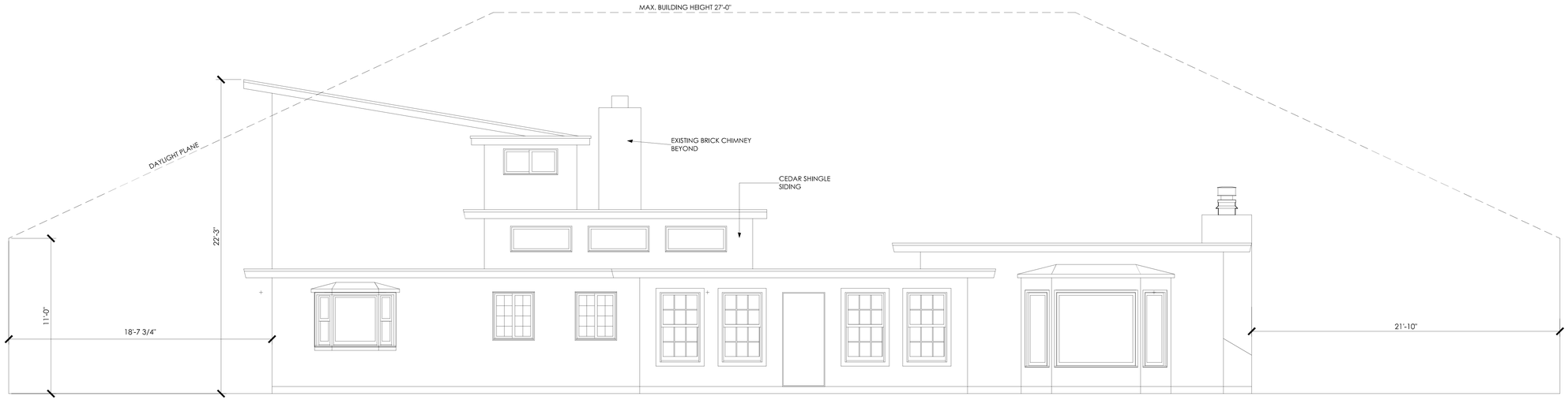

EXISTING FRONT (WEST) ELEVATION

EXISTING LEFT SIDE (NORTH) ELEVATION

EXISTING RIGHT SIDE (SOUTH) ELEVATION

REVISIONS	BY:

These plans and their use are the property of Design Discoveries® and are not to be reproduced or reused without the written permission from Design Discoveries®. These plans are intended to provide the basic construction information in site work, concrete work, plumbing, framing, mechanical and all other trades necessary to substantially complete this structure. This means these plans must be verified and checked completely by the builder or person in authority for the job. Any discrepancy, error or omission, if found, it to be brought immediately to the attention of the designer before and construction work, or purchase is made.

DESIGN DISCOVERIES
Residential Building Design
Custom Homes • Remodels • Additions • Kitchens & Baths
1647 Quail Court • Livermore, CA 94550
(650) • 996 • 5489 cell AndArchi@Me.com
Christopher J. Anderson

A NEW RESIDENCE FOR:
ALEX AND SOO KIM
121 DOUD DRIVE
LOS ALTOS, CA 94022

DATE:
7/21/2020
SCALE:
1/4" = 1'-0"
SHEET:
A-7

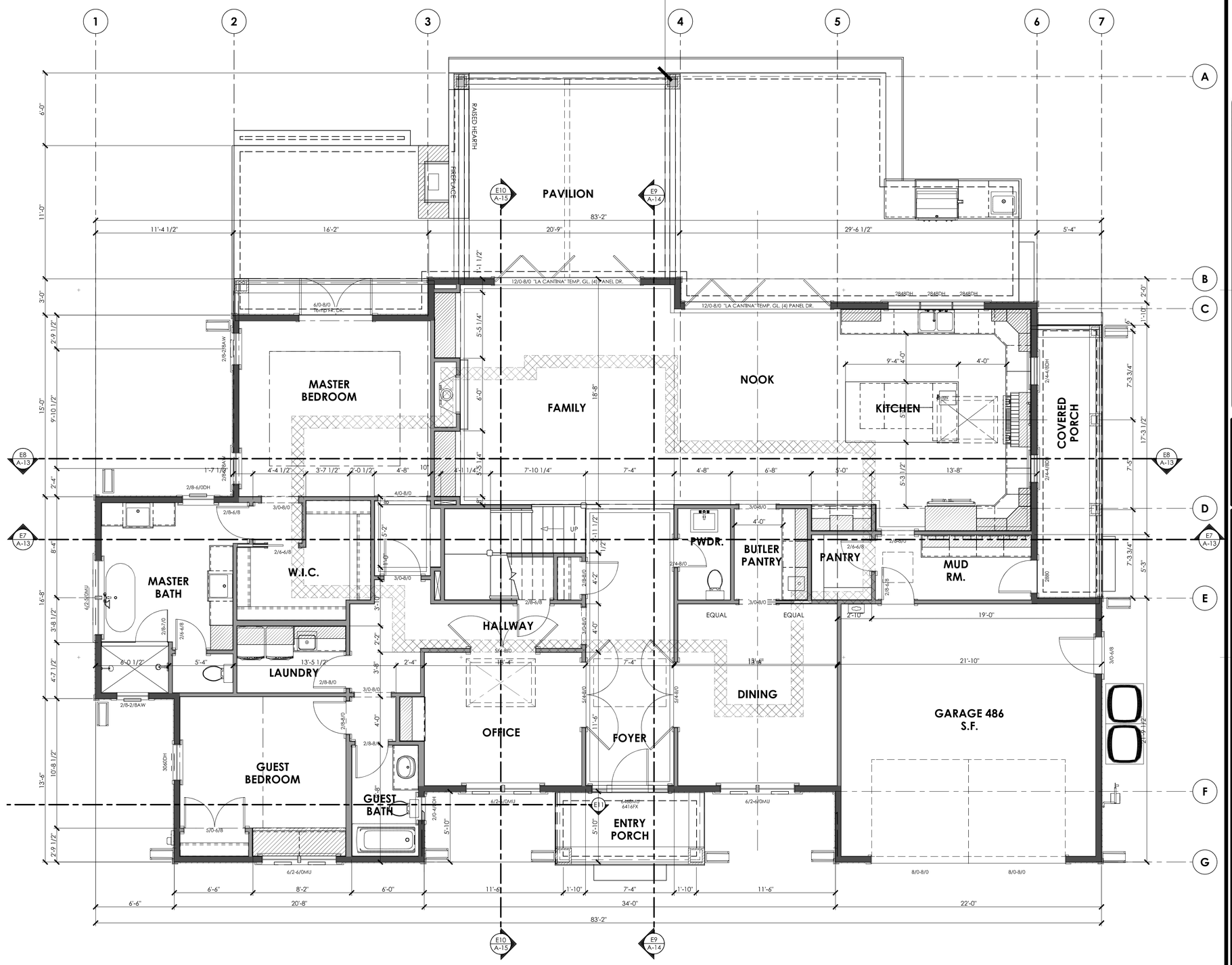

1st FLOOR PLAN

REVISIONS	BY:

These plans and their use are the property of Design Discoveries® and are not to be reproduced or reused without the written permission from Design Discoveries®. These plans are intended to provide the basic construction information in site work, concrete work, plumbing, framing, mechanical and all other trades necessary to substantially complete this structure. This means these plans must be verified and checked completely by the builder or person in authority for the job. Any discrepancy, error or omission, if found, it to be brought immediately to the attention of the designer before and construction work, or purchase is made.

DESIGN DISCOVERIES
Residential Building Design
Custom Homes • Remodels • Additions • Kitchens & Baths
1647 Quail Court • Livermore, CA 94550
(650) • 996 • 5489 cell AndArchi@Me.com
Christopher J. Anderson

A NEW RESIDENCE FOR:
ALEX AND SOO KIM
121 DOUD DRIVE
LOS ALTOS, CA 94022

DATE:	7/21/2020
SCALE:	1/4" = 1'-0"
SHEET:	A-8

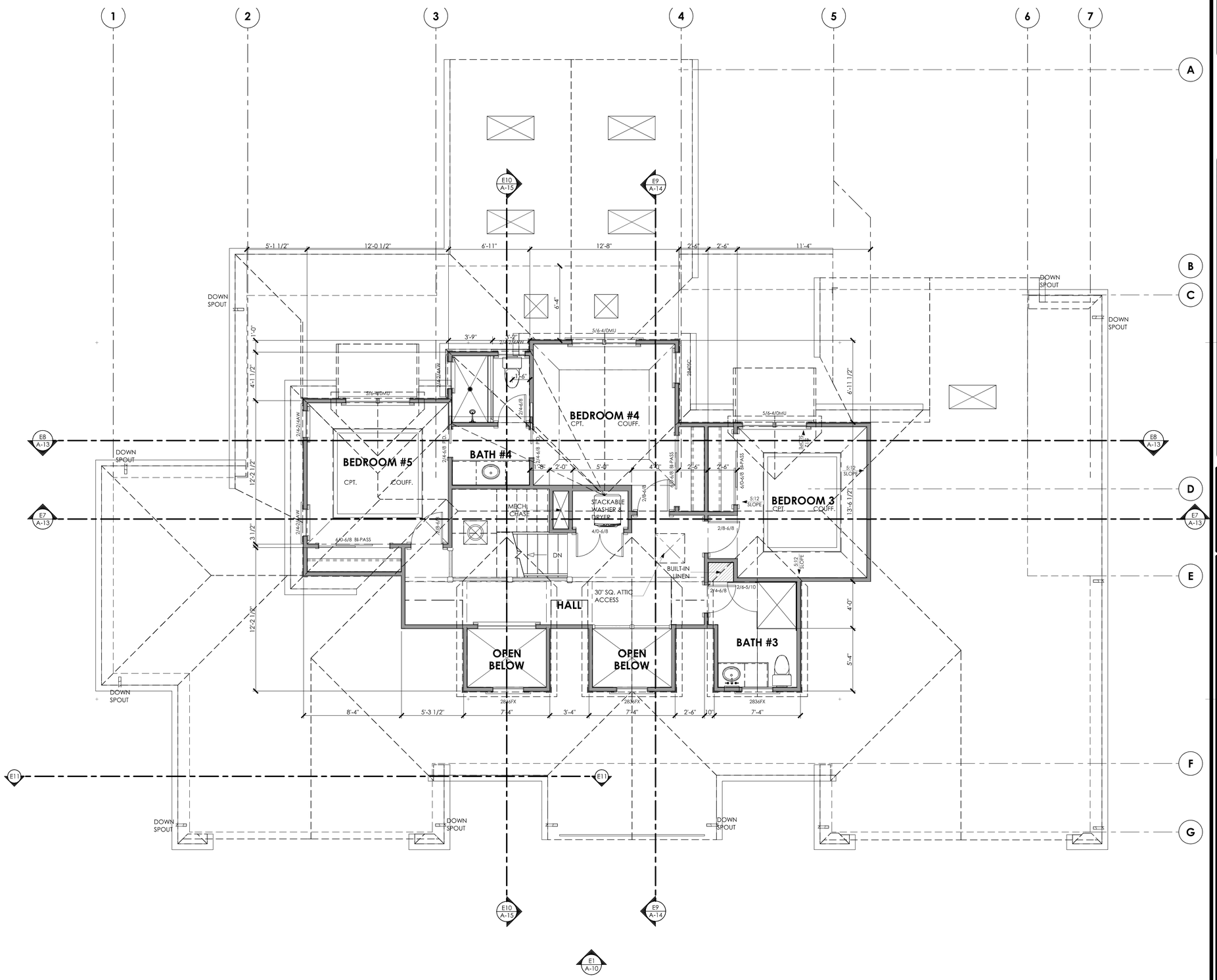

2nd FLOOR PLAN

REVISIONS	BY:

These plans and their use are the property of Design Discoveries® and are not to be reproduced or reused without the written permission from Design Discoveries®. These plans are intended to provide the basic construction information in site work, concrete work, plumbing, framing, mechanical and all other trades necessary to substantially complete this structure. This means these plans must be verified and checked completely by the builder or person in authority for the job. Any discrepancy, error or omission, if found, it to be brought immediately to the attention of the designer before and construction work, or purchase is made.

DESIGN DISCOVERIES
Residential Building Design
Custom Homes • Remodels • Additions • Kitchens & Baths
1647 Quail Court • Livermore, CA 94550
(650) • 996 • 5489 cell AndArchi@Me.com
Christopher J. Anderson

A NEW RESIDENCE FOR:
ALEX AND SOO KIM
121 DOUD DRIVE
LOS ALTOS, CA 94022

DATE:	7/21/2020
SCALE:	1/4" = 1'-0"
SHEET:	A-9

FRONT (WEST) ELEVATION

REAR (EAST) ELEVATION

REVISIONS	BY:

These plans and their use are the property of Design Discoveries" and are not to be reproduced or reused without the written permission from Design Discoveries". These plans are intended to provide the basic construction information in site work, concrete work, plumbing, framing, mechanical and all other trades necessary to substantially complete this structure. This means these plans must be verified and checked completely by the builder or person in authority for the job. Any discrepancy, error or omission, if found, it to be brought immediately to the attention of the designer before and construction work, or purchase is made.

DESIGN DISCOVERIES
Residential Building Design
Custom Homes • Remodels • Additions • Kitchens & Baths
1647 Quail Court • Livermore, CA 94550
(650) • 996 • 5489 cell AndArchi@Me.com
Christopher J. Anderson

A NEW RESIDENCE FOR:
ALEX AND SOO KIM
121 DOUD DRIVE
LOS ALTOS, CA 94022

DATE:	7/22/2020
SCALE:	1/4" = 1'-0"
SHEET:	A-10

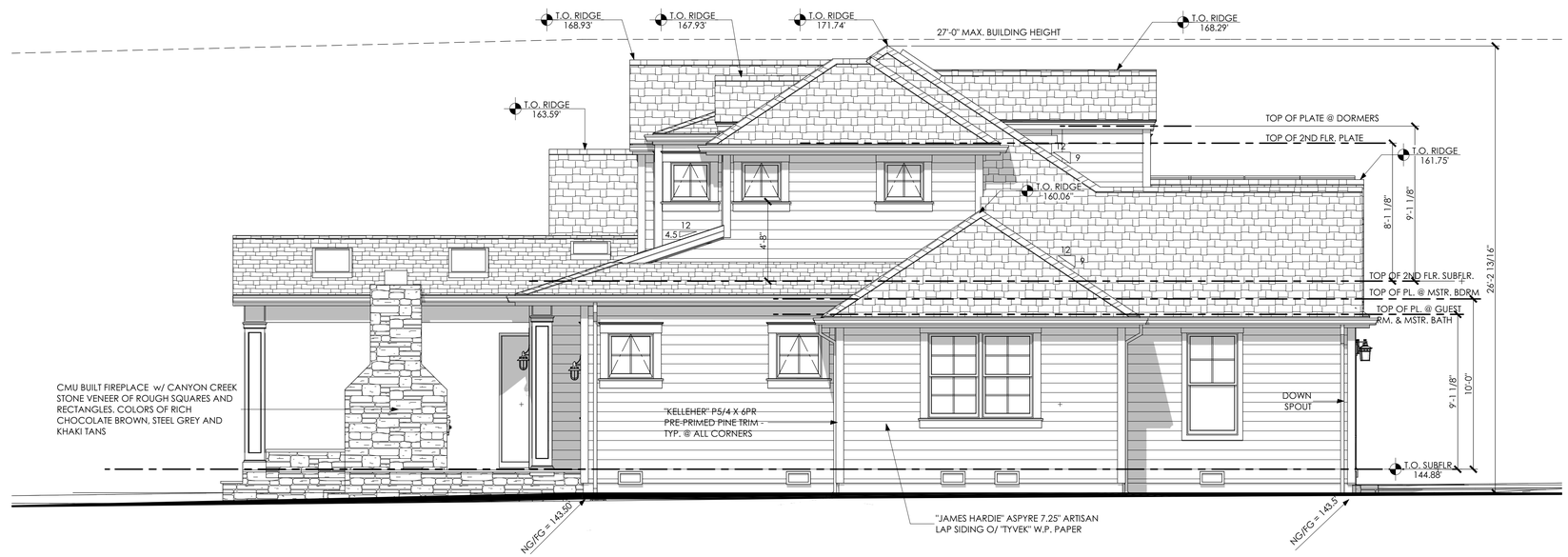

LEFT SIDE (NORTH) ELEVATION

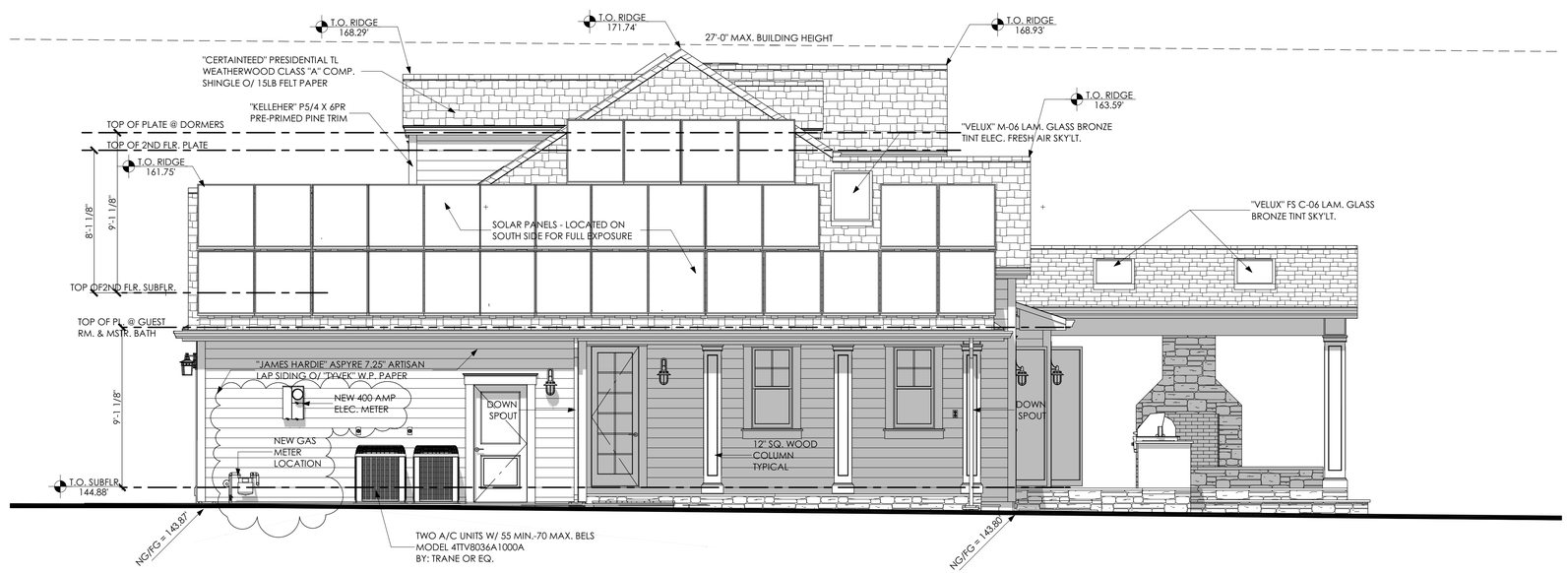

RIGHT SIDE (SOUTH) ELEVATION

REVISIONS	BY:

These plans and their use are the property of Design Discoveries" and are not to be reproduced or reused without the written permission from Design Discoveries". These plans are intended to provide the basic construction information in site work, concrete work, plumbing, framing, mechanical and all other trades necessary to substantially complete this structure. This means these plans must be verified and checked completely by the builder or person in authority for the job. Any discrepancy, error or omission, if found, it to be brought immediately to the attention of the designer before and construction work, or purchase is made.

DESIGN DISCOVERIES
Residential Building Design
Custom Homes • Remodels • Additions • Kitchens & Baths
1647 Quail Court • Livermore, CA 94550
(650) • 996 • 5489 cell AndArchi@Me.com
Christopher J. Anderson

A NEW RESIDENCE FOR:
ALEX AND SOO KIM
121 DOUD DRIVE
LOS ALTOS, CA 94022

DATE:	8/7/2020
SCALE:	1/4" = 1'-0"
SHEET:	A-11

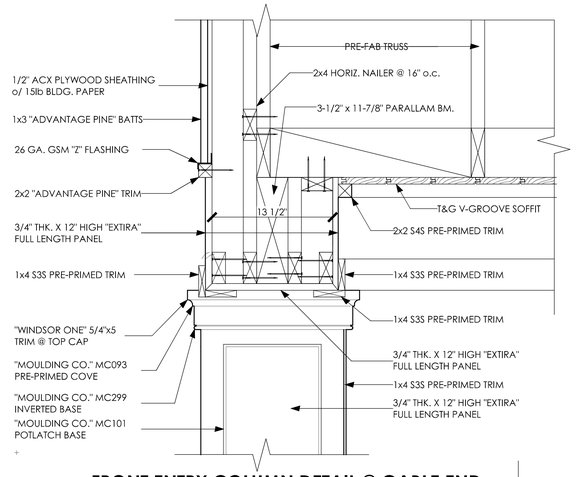

FRONT ENTRY COLUMN DETAIL @ GABLE END

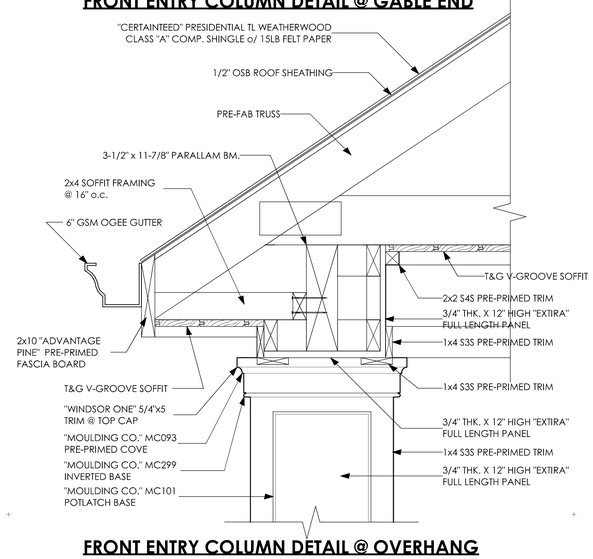

FRONT ENTRY COLUMN DETAIL @ OVERHANG

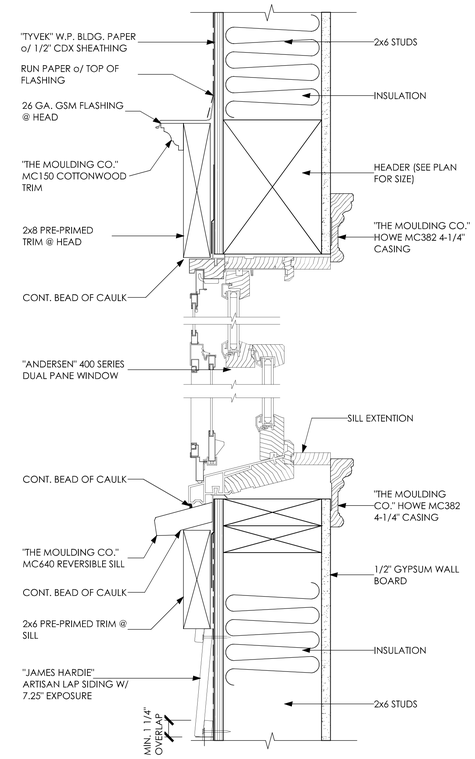

WINDOW HEAD AND STOOL TRIM DETAIL

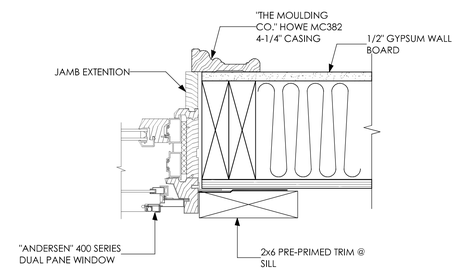

WINDOW JAMB TRIM DETAIL

REVISIONS	BY:

These plans and their use are the property of Design Discoveries® and are not to be reproduced or reused without the written permission from Design Discoveries®. These plans are intended to provide the basic construction information in site work, concrete work, plumbing, framing, mechanical and all other trades necessary to substantially complete this structure. This means these plans must be verified and checked completely by the builder or person in authority for the job. Any discrepancy, error or omission, if found, it to be brought immediately to the attention of the designer before and construction work, or purchase is made.

DESIGN DISCOVERIES
Residential Building Design
Custom Homes • Remodels • Additions • Kitchens & Baths
1647 Quail Court • Livermore, CA 94550
(650) • 996 • 5489 cell AndArchd@Mc.com
Christopher J. Anderson

A NEW RESIDENCE FOR:
ALEX AND SOO KIM
121 DOUD DRIVE
LOS ALTOS, CA 94022

DATE:
7/21/2020
SCALE:
AS SHOWN
SHEET:
A-12

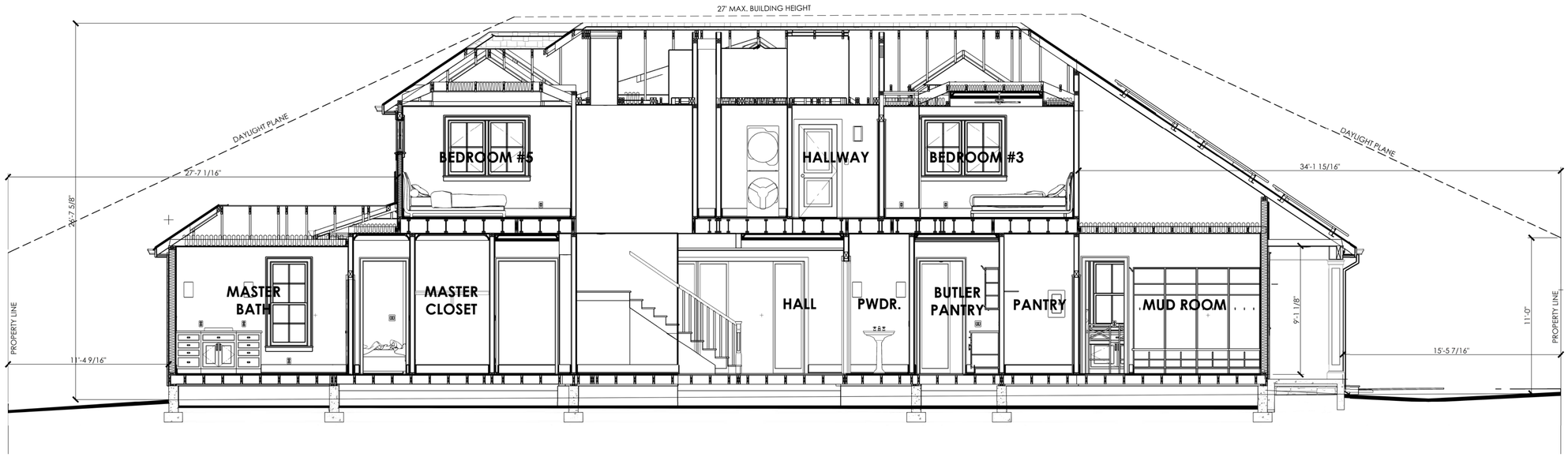

SECTION A

SECTION B

REVISIONS	BY:

These plans and their use are the property of Design Discoveries® and are not to be reproduced or reused without the written permission from Design Discoveries®. These plans are intended to provide the basic construction information in site work, concrete work, plumbing, framing, mechanical and all other trades necessary to substantially complete this structure. This means these plans must be verified and checked completely by the builder or person in authority for the job. Any discrepancy, error or omission, if found, it to be brought immediately to the attention of the designer before and construction work, or purchase is made.

DESIGN DISCOVERIES
Residential Building Design
Custom Homes • Remodels • Additions • Kitchens & Baths
1647 Quail Court • Livermore, CA 94550
(650) • 996 • 5489 cell AndArchi@Me.com
Christopher J. Anderson

A NEW RESIDENCE FOR:
ALEX AND SOO KIM
121 DOUD DRIVE
LOS ALTOS, CA 94022

DATE:	7/21/2020
SCALE:	1/4" = 1'-0"
SHEET:	A-13

SECTION C

REVISIONS	BY:

These plans and their use are the property of Design Discoveries® and are not to be reproduced or reused without the written permission from Design Discoveries®. These plans are intended to provide the basic construction information in site work, concrete work, plumbing, framing, mechanical and all other trades necessary to substantially complete this structure. This means these plans must be verified and checked completely by the builder or person in authority for the job. Any discrepancy, error or omission, if found, it to be brought immediately to the attention of the designer before and construction work, or purchase is made.

DESIGN DISCOVERIES
Residential Building Design
Custom Homes • Remodels • Additions • Kitchens & Baths
1647 Quail Court • Livermore, CA 94550
(650) • 996 • 5489 cell AndArchi@Me.com
Christopher J. Anderson

A NEW RESIDENCE FOR:
ALEX AND SOO KIM
121 DOUD DRIVE
LOS ALTOS, CA 94022

DATE:	7/21/2020
SCALE:	3/8" = 1'-0"
SHEET:	A-14

SECTION D

REVISIONS	BY:

These plans and their use are the property of Design Discoveries" and are not to be reproduced or reused without the written permission from Design Discoveries". These plans are intended to provide the basic construction information in site work, concrete work, plumbing, framing, mechanical and all other trades necessary to substantially complete this structure. This means these plans must be verified and checked completely by the builder or person in authority for the job. Any discrepancy, error or omission, if found, it to be brought immediately to the attention of the designer before and construction work, or purchase is made.

DESIGN DISCOVERIES
Residential Building Design
Custom Homes • Remodels • Additions • Kitchens & Baths
1647 Quail Court • Livermore, CA 94550
(650) • 996 • 5489 cell AndArchi@Me.com

Christopher J. Anderson

A NEW RESIDENCE FOR:
ALEX AND SOO KIM
121 DOUD DRIVE
LOS ALTOS, CA 94022

DATE:
7/21/2020
SCALE:
3/8" = 1'-0"
SHEET:
A-15

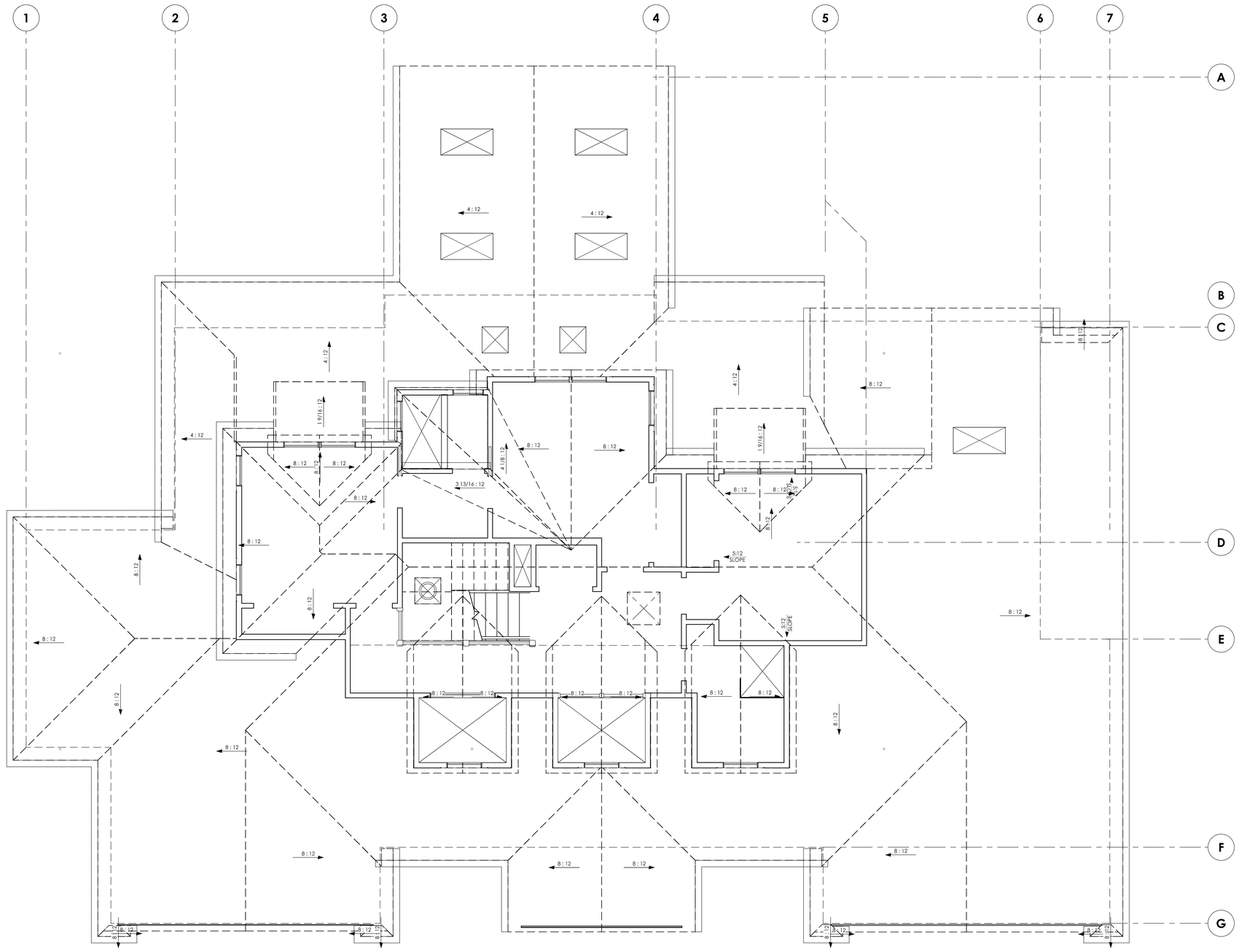

PROPOSED ROOF PLAN

REVISIONS	BY:

These plans and their use are the property of Design Discoveries® and are not to be reproduced or reused without the written permission from Design Discoveries®. These plans are intended to provide the basic construction information in site work, concrete work, plumbing, framing, mechanical and all other trades necessary to substantially complete this structure. This means these plans must be verified and checked completely by the builder or person in authority for the job. Any discrepancy, error or omission, if found, it to be brought immediately to the attention of the designer before and construction work, or purchase is made.

DESIGN DISCOVERIES
Residential Building Design
Custom Homes • Remodels • Additions • Kitchens & Baths
1647 Quail Court • Livermore, CA 94550
(650) • 996 • 5489 cell AndArchi@Me.com

Christopher J. Anderson

A NEW RESIDENCE FOR:
ALEX AND SOO KIM
121 DOUD DRIVE
LOS ALTOS, CA 94022

DATE:	7/21/2020
SCALE:	1/4" = 1'-0"
SHEET:	**A-16**

KIM RESIDENCE
121 DOUD DRIVE
LOS ALTOS CA

LEGEND

EXISTING	PROPOSED	DESCRIPTION
		BOUNDARY
		PROPERTY LINE
		RETAINING WALL
		LANDSCAPE RETAINING WALL
		SUBDRAIN LINE
		TIGHTLINE
SD	SD	STORM DRAIN LINE
SS	SS	SANITARY SEWER LINE
W	W	WATER LINE
G	G	GAS LINE
P	P	PRESSURE LINE
JT	JT	JOINT TRENCH
		SET BACK LINE
		CONCRETE VALLEY GUTTER
		EARTHEN SWALE
CB	CB	CATCH BASIN
JB	JB	JUNCTION BOX
AD	AD	AREA DRAIN
		CURB INLET
SDMH	SDMH	STORM DRAIN MANHOLE
		FIRE HYDRANT
SSMH	SSMH	SANITARY SEWER MANHOLE
		STREET SIGN
222.57 INV	222.57 INV	SPOT ELEVATION
		FLOW DIRECTION
	D	DEMOLISH/REMOVE
		BENCHMARK
200	200	CONTOURS
	XX" TREE	TREE TO BE REMOVED

ABBREVIATIONS

AB	AGGREGATE BASE	LF	LINEAL FEET
AC	ASPHALT CONCRETE	MAX	MAXIMUM
ACC	ACCESSIBLE	MH	MANHOLE
AD	AREA DRAIN	MIN	MINIMUM
BC	BEGINNING OF CURVE	MON.	MONUMENT
B & D	BEARING & DISTANCE	(N)	NEW
BM	BENCHMARK	NO.	NUMBER
BW/FG	BOTTOM OF WALL/FINISH	NTS	NOT TO SCALE
GRADE		O.C.	ON CENTER
CB	CATCH BASIN	O/	OVER
C & G	CURB AND GUTTER	P.A.	PLANTING AREA
℄	CENTER LINE	PED	PEDESTRIAN
CPP	CORRUGATED PLASTIC PIPE (SMOOTH INTERIOR)	PIV	POST INDICATOR VALVE
		PSS	PUBLIC SERVICES EASEMENT
CO	CLEANOUT	⅊	PROPERTY LINE
COTG	CLEANOUT TO GRADE	PP	POWER POLE
CONC	CONCRETE	PUE	PUBLIC UTILITY EASEMENT
CONST	CONSTRUCT or –TION	PVC	POLYVINYL CHLORIDE
CONC COR	CONCRETE CORNER	R	RADIUS
CY	CUBIC YARD	RCP	REINFORCED CONCRETE PIPE
D	DIAMETER	RIM	RIM ELEVATION
DI	DROP INLET	RW	RAINWATER
DIP	DUCTILE IRON PIPE	R/W	RIGHT OF WAY
EA	EACH	S	SLOPE
EC	END OF CURVE	S.A.D.	SEE ARCHITECTURAL DRAWINGS
EG	EXISTING GRADE	SAN	SANITARY
EL	ELEVATIONS	SD	STORM DRAIN
EP	EDGE OF PAVEMENT	SDMH	STORM DRAIN MANHOLE
EQ	EQUIPMENT	SHT	SHEET
EW	EACH WAY	S.L.D.	SEE LANDSCAPE DRAWINGS
(E)	EXISTING	SPEC	SPECIFICATION
FC	FACE OF CURB	SS	SANITARY SEWER
FF	FINISHED FLOOR	SSCO	SANITARY SEWER CLEANOUT
FG	FINISHED GRADE	SSMH	SANITARY SEWER MANHOLE
FH	FIRE HYDRANT	ST.	STREET
FL	FLOW LINE	STA	STATION
FS	FINISHED SURFACE	STD	STANDARD
G	GAS	STRUCT	STRUCTURAL
GA	GAGE OR GAUGE	T	TELEPHONE
GB	GRADE BREAK	TC	TOP OF CURB
HDPE	HIGH DENSITY CORRUGATED POLYETHYLENE PIPE	TEMP	TEMPORARY
		TP	TOP OF PAVEMENT
HORIZ	HORIZONTAL	TW/FG	TOP OF WALL/FINISH GRADE
HI PT	HIGH POINT	TYP	TYPICAL
H&T	HUB & TACK	VC	VERTICAL CURVE
ID	INSIDE DIAMETER	VCP	VITRIFIED CLAY PIPE
INV	INVERT ELEVATION	VERT	VERTICAL
JB	JUNCTION BOX	W/	WITH
JT	JOINT TRENCH	W, WL	WATER LINE
JP	JOINT UTILITY POLE	WM	WATER METER
L	LENGTH	WWF	WELDED WIRE FABRIC
LNDG	LANDING		

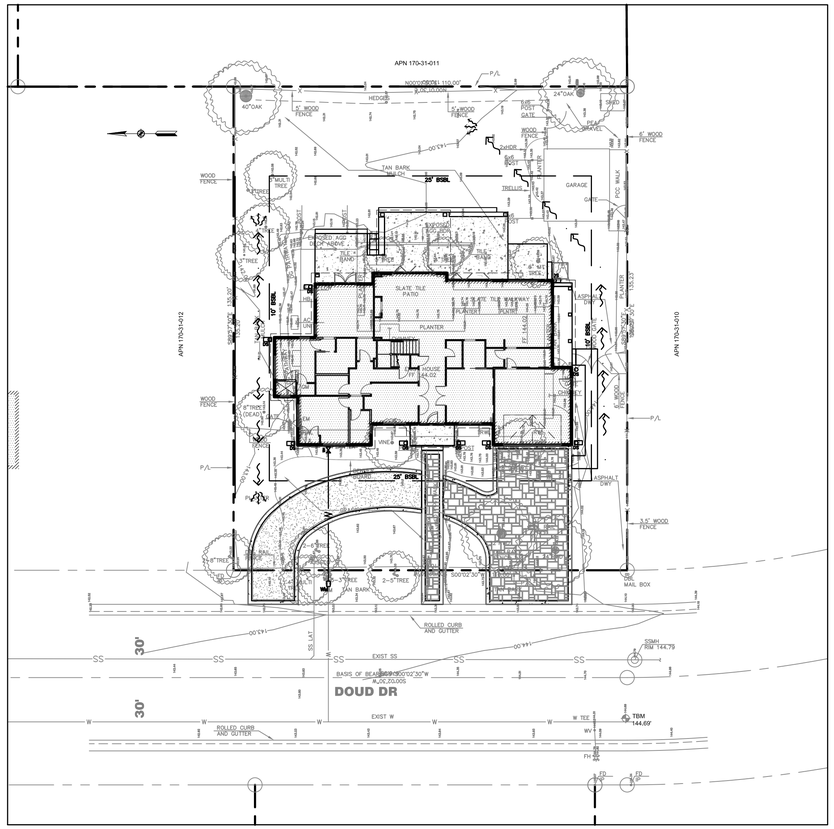

KEY MAP
1" = 20'

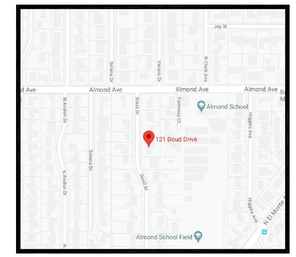

VICINITY MAP
NTS

REFERENCES

THIS GRADING AND DRAINAGE PLAN IS SUPPLEMENTAL TO:

TOPOGRAPHIC SURVEY BY:
JET ENGINEERING
1048 EL CAMINO REAL, SUITE C
REDWOOD CITY, CA 94063
APN:170-31-011
DATED: JANUARY 3, 2019.

SITE PLAN BY
DESIGN DISCOVERIES
1647 QUAIL COURT LIVERMORE, CA. 94550
650-996-3489
ENTITLED:
"SITE PLAN"
A NEW RESIDENCE FOR:
ALEX AND SOO KIM
121 DOUD DRIVE
LOS ALTOS, CA 94022
DATE: FEBUARY 25, 2020

THE CONTRACTOR SHALL REFER TO THE ABOVE NOTED SURVEY AND PLAN, AND SHALL VERIFY BOTH EXISTING AND PROPOSED ITEMS ACCORDING TO THEM.

BENCHMARK:

CITY OF LOS ALTOS BENCH MARK BM12, ELEVATION 134.94 (NAVD 88) DESCRIBED AS FOLLOWS:
TOP OF CURB @ SOUTHERLY SIDE OF ALMOND AVENUE @ CENTERLINE NORTH CLARK AVE. EXTENDED.
TEMPORARY BENCHMARK (TBM)
MAG NAIL SET IN DOUD DRIVE, IN FRONT OF THE PROJECT SITE, ELEVATION 144.69'

BASIS OF BEARINGS:

THE BEARING S00°02'30"W SHOWN ON THE MAP ENTITLED TRACT NO. 442 SUNNY ACRES, WHICH MAPWAS FILED FOR RECORD IN THE OFFICE OF THE RECORDER OF THE COUNTY OF SANTA CLARA, STATE OF CALIFORNIA ON DECEMBER 29, 1947, IN BOOK 15 OF MAPS PAGE(S) 26.

BOUNDARY

THE LAND REFERRED TO IN THIS REPORT IS SITUATED IN THE CITY OF LOS ALTOS, COUNTY OF SANTA CLARA, STATE OF CALIFORNIA, DESCRIBED AS FOLLOWS:
LOT 4, AS SHOWN ON THAT CERTAIN MAP ENTITLED TRACT NO. 442 SUNNY ACRES, WHICH MAPWAS FILED FOR RECORD IN THE OFFICE OF THE RECORDER OF THE COUNTY OF SANTA CLARA, STATE OF CALIFORNIA ON DECEMBER 29, 1947, IN BOOK 15 OF MAPS PAGE(S) 26.

* BUILDING PAD NOTE:
ADJUST PAD LEVEL AS REQUIRED. REFER TO STRUCTURAL PLANS FOR SLAB SECTION OR CRAWL SPACE DEPTH TO ESTABLISH PAD LEVEL.

CALL 1-800-227-2600 BEFORE YOU DIG
USA UNDERGROUND SERVICE ALERT

SHEET INDEX

C0.1	TITLE SHEET
C0.2	GRADING SPECIFICATIONS
C2.1	GRADING & DRAINAGE PLAN
C3.1	DETAILS
C4.1	EROSION CONTROL PLAN
C4.2	EROSION CONTROL NOTES & DETAILS
C4.3	CONSTRUCTION BEST MANAGEMENT PRACTICES (SWPPP)

REGISTERED PROFESSIONAL ENGINEER
WILLIAM C. CLARK
No. 65497
Exp. 09-30-21
CIVIL
STATE OF CALIFORNIA

CLARK CIVIL ENGINEERING
DESIGN • CONSULTING • SURVEY
12700 Highway One, Point Reyes Station, CA
PH: 415-295-4450 FAX: 510-372-0259

KIM RESIDENCE
121 DOUD DRIVE
LOS ALTOS, CA
SANTA CLARA COUNTY
APN: 170-31-011

TITLE SHEET

REVISIONS	BY
–	–
–	–
–	–
–	–
–	–

JOB NO:	220006
DATE:	7-9-20
SCALE:	AS NOTED
DESIGN BY:	WCC
DRAWN BY:	DR
SHEET NO:	C0.1

GENERAL SITE NOTES:

1. CONTRACTOR SHALL VISIT THE SITE PRIOR TO BIDDING ON THIS WORK AND CONSIDER THE EXISTING CONDITIONS AND SITE CONSTRAINTS IN THE BID. CONTRACTOR SHALL BE IN THE POSSESSION OF AND FAMILIAR WITH ALL APPLICABLE GOVERNING AGENCIES STANDARD DETAILS AND SPECIFICATIONS PRIOR TO SUBMITTING OF A BID.
2. ALL WORK IN THE PUBLIC RIGHT-OF-WAY SHALL CONFORM TO ALL APPLICABLE GOVERNING AGENCIES STANDARD DETAILS & SPECIFICATIONS.
3. PRIOR TO BEGINNING WORK, AND AFTER INITIAL HORIZONTAL CONTROL STAKING, CONTRACTOR SHALL FIELD CHECK ALL ELEVATIONS MARKED WITH (E) AND REPORT ANY DISCREPANCIES GREATER THAN 0.05' TO OWNER'S PROJECT MANAGER AND CIVIL ENGINEER.
4. DAMAGE TO ANY EXISTING SITE IMPROVEMENTS, UTILITIES AND/OR SERVICES TO REMAIN SHALL BE RESPONSIBILITY OF THE CONTRACTOR. CONTRACTOR SHALL REPAIR AND/OR REPLACE IN KIND.
5. CONTRACTOR SHALL REPLACE ALL STRUCTURES AND GRATE LIDS FOR VAULTS, CATCH BASINS, ETC.., WITH VEHICULAR-RATED STRUCTURES IN ALL TRAFFIC ACCESSIBLE AREAS WITHIN NEW CONSTRUCTION AREA UNLESS OTHERWISE NOTED.
6. THE CONTRACTOR SHALL ADJUST TO FINAL GRADE ALL EXISTING AND/OR NEW MANHOLES, CURB INLETS, CATCH BASIN, VALVES, MONUMENT COVERS, AND OTHER CASTINGS WITHIN THE CONSTRUCTION AREA TO FINAL GRADE IN PAVEMENT AND LANDSCAPE AREAS UNLESS OTHERWISE NOTED.
7. CONTRACTOR AGREES THAT HE SHALL ASSUME SOLE AND COMPLETE RESPONSIBILITY FOR JOB SITE CONDITIONS DURING THE COURSE OF CONSTRUCTION OF THIS PROJECT INCLUDING SAFETY OF ALL PERSONS AND PROPERTY THAT THIS REQUIREMENT SHALL APPLY CONTINUOUSLY AND NOT TO BE LIMITED TO NORMAL WORKING HOURS AND THAT THE CONTRACTOR SHALL DEFEND INDEMNIFY AND HOLD THE OWNER, THE CONSULTING ENGINEER AND THE CITY HARMLESS FROM ANY AND ALL LIABILITY, REAL OR ALLEGED, IN CONNECTION WITH THE PERFORMANCE OF WORK ON THIS PROJECT, EXCEPTING FOR LIABILITY ARISING FROM THE SOLE NEGLIGENCE OF THE OWNER OR THE CONSULTING ENGINEER.
8. EXISTING PEDESTRIAN WALKWAYS. BIKE PATHS AND ACCESSIBLE PATHWAYS SHALL BE MAINTAINED, WHERE FEASIBLE, DURING CONSTRUCTION.
9. IF A CONFLICT ARISES BETWEEN THE SPECIFICATIONS AND THE PLANS NOTES, THE MORE STRINGENT REQUIREMENT SHALL GOVERN.
10. CONTRACTOR SHALL BE RESPONSIBLE FOR OBTAINING ANY REQUIRED PERMITS AND COSTS ASSOCIATED WITH SAID PERMITS

TREE/PLANT PROTECTION NOTES:

1. PRIOR TO BEGINNING CONSTRUCTION ON SITE, CONTRACTOR SHALL IDENTIFY, CONFIRM WITH OWNER AND PROTECT EXISTING TREES AND PLANTS DESIGNATED AS TO REMAIN.
2. PROVIDE 5 FOOT TALL TREE PROTECTION FENCE WITH DISTINCTIVE MARKING VISIBLE TO CONSTRUCTION EQUIPMENT, ENCLOSING DRIP LINES OF TREES DESIGNATED TO REMAIN.
3. WORK REQUIRED WITHIN FENCE LINE SHALL BE HELD TO A MINIMUM, AVOID UNNECESSARY MOVEMENT OF HEAVY EQUIPMENT WITHIN FENCED AREA AND DO NOT PARK ANY VEHICLES UNDER DRIP LINE OR TREES. DO NOT STORE EQUIPMENT OR MATERIALS WITHIN FENCE LINE.
4. PRIOR TO REMOVING ROOTS AND BRANCHES LARGER THAN 2" IN DIAMETER OF TREES OR PLANTS THAT ARE TO REMAIN, CONSULT WITH THE OWNER'S PROJECT MANAGER.
5. ANY GRADE CHANGES GREATER THAN 6" WITHIN THE DRIPLINE OF EXISTING TREES SHALL NOT BE MADE WITHOUT FIRST CONSULTING THE ARCHITECT / CIVIL ENGINEER.
6. PROTECT EXISTING TREES TO REMAIN FROM SPILLED CHEMICALS, FUEL OIL, MOTOR OIL, GASOLINE AND ALL OTHER CHEMICALLY INJURIOUS MATERIALS; AS WELL AS FROM PUDDLING OR CONTINUOUSLY RUNNING WATER. SHOULD A SPILL OCCUR, STOP WORK IN THAT AREA AND CONTACT THE INSPECTOR IMMEDIATELY. CONTRACTOR SHALL BE RESPONSIBLE TO MITIGATE DAMAGE FROM SPILLED MATERIAL AS WELL AS MATERIAL CLEAN UP.
7. PROVIDE TEMPORARY IRRIGATION TO ALL TREES AND PLANTS THAT ARE IN OR ADJACENT TO CONSTRUCTION AREAS WHERE EXISTING IRRIGATION SYSTEMS MAY BE AFFECTED BY THE CONSTRUCTION. ALSO PROVIDE TEMPORARY IRRIGATION TO RELOCATE TREES.
8. CONTRACTOR SHALL BE RESPONSIBLE FOR ONGOING MAINTENANCE OF ALL TREES AND PLANTS DESIGNATED TO REMAIN AND FOR MAINTENANCE OF RELOCATED TREES STOCKPILED DURING CONSTRUCTION. CONTRACTOR WILL BE REQUIRED TO REPLACE TREES OR PLANTS THAT DIE DUE TO LACK OF MAINTENANCE.
9. TREE PROTECTION ZONES NEED TO BE SET UP WITH FENCING AROUND TREES TO A MINIMUM DISTANCE OF 10 FEET FROM THE BUTTRESS FLAIR. NO EQUIPMENT, MATERIALS STORAGE, OR DIGGING IS ALLOWED WITHIN THE TREE PROTECTION ZONE WITHOUT WRITTEN AUTHORIZATION FROM THE PROJECT ARBOHIST, ARBOHIST SUPERVISOR OR AUTHORIZED DESIGNATE. ANY AUTHORIZED DIGGING WITHIN THE TREE PROTECTION ZONE MUST BE DONE BY HAND; I.E. PICK AND SHOVEL: CARE MUST BE TAKEN TO AVOID SEVERING ANY STRUCTURAL ROOTS. ANY ROOTS GREATER THAN 2" IN DIAMETER INCIDENTALLY SEVERED, WHETHER INSIDE OR OUTSIDE OF THE TREE PROTECTION ZONE, WILL NEED TO BE BROUGHT TO THE ATTENTION OF AND INSPECTED BY THE PROJECT ARBOHIST, ARBOHIST SUPERVISOR OR AUTHORIZED DESIGNATE; WHO WILL EVALUATE THE TREE IN QUESTION FOR IMPACTS TO BOTH LONG TERM HEALTH AND STABILITY. ANY ROOT SEVERANCE CONCLUDED TO COMPROMISE TREE STABILITY/SAFETY MAY RESULT IN TREE REMOVAL. ANY COSTS RESULTING FROM TREE REMOVALS WILL BE CHARGED TO THE PROJECT IN QUESTION. ANY COSTS FROM TREE REMOVALS RESULTING FROM VIOLATIONS OF THE COUNTY CODES WILL BE ABSORBED BY THE CONTRACTOR UP TO AND INCLUDING ANY FINES LEVIED BY THE COUNTY.

SITE MAINTENANCE:

1. REMOVE ALL DIRT, GRAVEL, RUBBISH, REFUSE, AND GREEN WASTE FROM STREET PAVEMENT AND STORM DRAINS ADJOINING THE SITE. LIMIT CONSTRUCTION ACCESS ROUTES ONTO THE SITE AND PLACE GRAVEL PADS AT THESE LOCATIONS. DO NOT DRIVE VEHICLES AND EQUIPMENT OFF THE PAVED OR GRAVELED AREAS DURING WET WEATHER.
2. SWEEP OR VACUUM THE STREET PAVEMENT AND SIDEWALKS ADJOINING THE PROJECT SITE AND THE ON-SITE PAVED AREAS ON A DAILY BASIS. SCRAPE CAKED-ON MUD AND DIRT FROM THESE AREAS BEFORE SWEEPING. CORNERS AND HARD TO REACH AREAS SHALL BE SWEPT MANUALLY.
3. CONTRACTOR SHALL: GATHER ALL CONSTRUCTION DEBRIS ON A REGULAR BASIS AND PLACE IT IN A DUMPSTER OR OTHER CONTAINER WHICH IS EMPTIED OR REMOVED ON A REGULAR BASIS. WHEN APPROPRIATE, USE TARPS ON THE GROUND TO COLLECT FALLEN DEBRIS OR SPLATTERS THAT COULD CONTRIBUTE TO STORM WATER RUNOFF POLLUTION.
4. IF THE STREET, SIDEWALKS AND/OR PARKING LOT ARE PRESSURE WASHED, DEBRIS MUST BE TRAPPED AND COLLECTED TO PREVENT ENTRY INTO THE STORM DRAIN SYSTEM. NO CLEANING AGENT MAY BE DISCHARGED INTO THE STORM DRAIN. IF ANY CLEANING AGENT OR DEGREASER IS USED, WASHED WATER MUST BE COLLECTED AND DISCHARGED TO THE SANITARY SEWER, SUBJECT TO THE APPROVAL OF THE OWNER'S PROJECT MANAGER, OR OTHERWISE DISPOSED OF THROUGH APPROVED DISPOSAL METHODS.
5. CREATE A CONTAINED AND COVERED AREA ON THE SITE FOR THE STORAGE OF BAGS, CEMENT, PAINTS, OILS, FERTILIZERS, PESTICIDES, OR OTHER MATERIAL USED ON THE SITE THAT HAVE THE POTENTIAL OF BEING WIND-BLOWN OR IN THE EVENT OF A MATERIAL SPILL.
6. NEVER CLEAN MACHINERY, EQUIPMENT OR TOOLS INTO A STREET, GUTTER OR STORM DRAIN.
7. ENSURE THAT CEMENT TRUCKS, PAINTERS, OR STUCCO/PLASTER FINISHING CONTRACTORS DO NOT DISCHARGE WASH WATER FROM EQUIPMENT, TOOLS OR RINSE CONTAINERS INTO GUTTERS OR DRAINS.
8. THE ON-SITE STORM DRAIN FACILITIES SHALL BE CLEANED A MINIMUM OF TWICE A YEAR AS FOLLOWS: IMMEDIATELY PRIOR TO OCTOBER 15TH AND ONCE IN JANUARY. ADDITIONAL CLEANING MAY BE REQUIRED IF FOUND NECESSARY BY THE INSPECTOR. CONTRACTOR SHALL BE RESPONSIBLE FOR COST ASSOCIATED WITH CLEANING.
9. PREVENT DUST FROM LEAVING THE SITE AND ACCUMULATING ON ADJACENT AREAS AS REQUIRED IN THE DUST CONTROL NOTES ON THIS SHEET.
10. PREVENT SEDIMENT LADEN STORM RUN-OFF FROM LEAVING THE SITE OR ENTERING STORM DRAIN OR SANITARY SEWER SYSTEMS AS REQUIRED IN THE EROSION AND SEDIMENTATION CONTROL NOTES ON THIS SHEET.
11. MAINTAIN EXISTING TREES AND PLANTS THAT ARE TO REMAIN AS REQUIRED BY THE TREE AND PLANT PROTECTION NOTES ON THE SHEET.

STORM DRAIN NOTES:

1. ALL STORM DRAIN PIPE SHALL BE PVC PER SECTION 02630, SLOPED AT 2% UNLESS OTHERWISE SPECIFIED ON THE PLANS. PIPE SHALL BE SIZED AS SPECIFIED ON THE PLANS. ALL DIRECTION CHANGES SHALL BE MADE WITH A Y CONNECTION OR LONG SWEEP ELBOWS, REGULAR ELBOWS, AND TEE'S SHOULD BE AVOIDED.
2. USE DETECTABLE METALIZED WARNING TAPE APPROXIMATE 6" BELOW THE SURFACE. TAPE SHALL BE A BRIGHT COLOR AND IMPRINTED WITH "CAUTION- STORM DRAIN LINE BELOW", CALPICO TYPE 2 OR EQUAL.
3. PAINT THE TOP OF THE CURBS ADJACENT TO EACH CATCH BASIN INSTALLED UNDER THE WORK OR ADJACENT TO THIS SITE WITH THE WORDS "NO DUMPING". WORDING TO BE BLUE 4" HIGH LETTERS ON A PAINTED WHITE BACKGROUND. A " NO DUMPING"
4. ALL AREA DRAINS AND CATCH BASINS GRATES WITHIN PEDESTRIAN ACCESSIBLE AREAS SHALL MEET ADA REQUIREMENTS AND HAVE BOLT DOWN GRATES.
5. ALL TRENCHES SHALL BE BACKFILLED PER THE SPECIFICATIONS OF THE GEOTECHNICAL REPORT AND REVIEWED BYGEOTECHNICAL ENGINEER TO VERIFY COMPACTION VALUES.
6. FOR GRAVITY FLOW SYSTEMS CONTRACTOR SHALL VERIFY (POTHOLE IF NECESSARY) SIZE, MATERIAL, LOCATION AND DEPTH OF ALL SYSTEMS THAT ARE TO BE CONNECTED TO OR CROSSED PRIOR TO TRENCH OR INSTALLATION OF ANY GRAVITY FLOW SYSTEM.
7. COMPLETE SYSTEMS; ALL UTILITY SYSTEMS ARE DELINEATED IN SCHEMATIC MANNER ON THESE PLANS. CONTRACTOR IS TO PROVIDE ALL FITTINGS, ACCESSORIES, AND WORK NECESSARY TO COMPLETE THE UTILITY SYSTEM SO THAT IT IS FULLY FUNCTIONING FOR THE PURPOSE INTENDED.

DEMOLITION NOTES:

1. CONTRACTOR IS TO COMPLY WITH ALL GENERAL AND STATE REQUIREMENTS INVOLVING THE REMOVAL AND DISPOSAL OF HAZARDOUS MATERIAL(S).
2. THE CONTRACTOR SHALL LOCATE AND CLEARLY MARK (AND THEN PRESERVE THESE MARKERS) FOR THE DURATION OF CONSTRUCTION OF ALL TELEPHONE, DATA, STREET LIGHT, SIGNAL LIGHT AND POWER FACILITIES THAT ARE IN OR NEAR THE AREA OF CONSTRUCTION.
3. CONTRACTOR'S BID IS TO INCLUDE ALL VISIBLE SURFACE AND ALL SUBSURFACE FEATURES IDENTIFIED TO BE REMOVED OR ABANDONED IN THESE DOCUMENTS.
4. THE CONTRACTOR SHALL BE RESPONSIBLE FOR A SITE INSPECTION TO FULLY ACKNOWLEDGE THE EXTENT OF THE DEMOLITION WORK.
5. THE CONTRACTOR SHALL BE RESPONSIBLE FOR OBTAINING ANY AND ALL PERMITS NECESSARY FOR ENCROACHMENT, GRADING, DEMOLITION, AND STATE JURISDICTIONS. THE CONTRACTOR SHALL PAY ALL FEES ASSOCIATED CONTRACTOR SHALL PAY DISPOSAL FEES.
6. CONTRACTOR SHALL PAY DISPOSAL FEES.
7. BACKFILL ALL DEPRESSIONS AND TRENCHES FROM DEMOLITION OF FOUNDATIONS & UTILITIES PER GEOTECHNICAL REPORT.
8. WITHIN LIMITS OF WORK, REMOVE CURBS, GUTTERS, LANDSCAPING, SIGNAGE, TREES, SCRUBS, ASPHALT, UNDERGROUND PIPES, ETC. AS INDICATED ON THE PLANS AND SPECS.
9. REMOVAL OF LANDSCAPING SHALL INCLUDE ROOTS AND ORGANIC MATERIALS.
10. PRIOR TO BEGINNING DEMOLITION WORK ACTIVITIES, CONTRACTOR SHALL INSTALL EROSION CONTROL MEASURES OUTLINED IN THE EROSION & SEDIMENTATION CONTROL PLAN & DETAILS.
11. CONTRACTOR SHALL BE RESPONSIBLE FOR DISPOSING ALL DEMOLITION MATERIALS, OR STORING SELECTED ITEMS BY OWNER'S REPRESENTATIVE AT DESIGNATED LOCATIONS.
12. THE CONTRACTOR SHALL MAINTAIN ALL SAFETY DEVICES, AND SHALL BE RESPONSIBLE FOR CONFORMANCE TO ALL LOCAL, STATE AND FEDERAL SAFETY AND HEALTH STANDARDS LAWS AND REGULATIONS.
13. THE CONTRACTOR SHALL PROTECT FROM DAMAGE ALL EXISTING IMPROVEMENTS FACILITIES AND STRUCTURES WHICH ARE TO REMAIN. ANY ITEMS DAMAGED BY THE CONTRACTOR OR HIS AGENTS OF ANY ITEMS REMOVED FOR HIS USE SHALL BE REPLACED IN EQUAL OR BETTER CONDITION AS APPROVED BY THE ARCHITECT OR OWNER'S REPRESENTATIVE.
14. COORDINATE WITH ELECTRICAL, MECHANICAL, FIRE PROTECTION AND ARCHITECTURAL DRAWINGS FOR UTILITY SHUT-DOWN / DISCONNECT LOCATIONS. CONTRACTOR IS TO SHUT OFF ALL UTILITIES AS NECESSARY PRIOR TO DEMOLITION. CONTRACTOR IS TO COORDINATE SERVICE INTERRUPTIONS WITH THE OWNER. DO NOT INTERRUPT SERVICES ADJACENT OFF-SITE OWNERS. ALSO SEE ARCHITECTURAL PLANS FOR ADDITIONAL SCOPE OF WORK.
15. DEMOLITION INCLUDES REMOVAL OF ALL ITEMS ASSOCIATED WITH THE UTILITIES AND SHALL INCLUDE PREPARING THE SITE FOR NEW UTILITIES, BUILDINGS, RETAINING WALLS, ETC.
16. ALL MATERIALS TO BE DEMOLISHED AND REMOVED SHALL BECOME THE PROPERTY OF THE CONTRACTOR AND SHALL BE LAWFULLY DISPOSED OF OFF-SITE.
17. THE PLAN IS NOT INTENDED TO BE A COMPLETE CATALOGUE OF ALL EXISTING STRUCTURES AND UTILITIES. THIS PLAN INTENDS TO DISCLOSE GENERAL INFORMATION KNOWN BY THE ENGINEER AND TO SHOW THE LIMITS OF THE AREA WHERE WORK WILL BE PERFORMED. THIS PLAN SHOWS THE EXISTING FEATURES TAKEN FROM A FIELD SURVEY, FIELD INVESTIGATIONS AND AVAILABLE INFORMATION. THIS PLAN MAY OR MAY NOT ACCURATELY REFLECT THE TYPE OR EXTENT OF THE ITEMS TO BE ENCOUNTERED AS THEY ACTUALLY EXIST. WHERE EXISTING FEATURES ARE NOT SHOWN, IT IS IMPLIED THAT THEY ARE NOT TO BE DEMOLISHED OR REMOVED. THE CONTRACTOR SHALL PERFORM A THOROUGH FIELD INVESTIGATION AND REVIEW OF THE SITE WITHIN THE LIMIT OF WORK SHOWN IN THIS PLAN SET TO DETERMINE THE TYPE, QUANTITY AND EXTENT OF ANY AND ALL ITEMS. THE CONTRACTOR SHALL BE SOLELY RESPONSIBLE FOR DETERMINING THE EXTENT OF EXISTING STRUCTURES AND UTILITIES AND QUANTITY OR WORK INVOLVED IN REMOVING THESE ITEMS FROM THE SITE.

WATER SYSTEM NOTES:

1. WHERE WATER LINES HAVE TO CROSS SANITARY SEWER LINES, DO SO AT A 90 DEGREE ANGLE AND WATER LINES SHALL BE MINIMUM OF 12" ABOVE THE TOP OF THE SANITARY SEWER LINES.
2. WATER LINES ARE SHOWN SCHEMATICALLY; CONTRACTOR SHALL IDENTIFY EACH ANGLE AND/ OR BEND THAT MAY BE REQUIRED TO ACCOMPLISH THE INTENDED DESIGN.
3. USE DETECTABLE METALIZED WARNING TAPE APPROXIMATELY 6" BELOW THE SURFACE, TAPE SHALL BE A BRIGHT COLOR AND IMPRINTED WITH "CAUTION-WATER LINE BELOW", CALPICO TYPE 2 OR EQUAL.
4. ALL WATER SERVICE CONNECTIONS SHALL BE INSTALLED IN ACCORDANCE WITH THE CITY OR APPLICABLE WATER DISTRICT STANDARDS.
5. PUBLIC AND PRIVATE WATER MAIN AND WATER SERVICE LINE 4-INCH THROUGH 12-INCH SHALL BE POLYVINYL CHLORIDE (PVC) AND SHALL MEET AWWA C900, RATED FOR 200 PSI CLASS PIPE WITH EPOXY COATED DUCTILE IRON FITTINGS AND FUSION EPOXY COATED GATE VALVES. ALL JOINTS SHALL FACTORY MANUFACTURED WITH BELL AND SPIGOT ENDS AND RUBBER GASKETS. NONMETALLIC WATER LINES HAVE TRACER WIRE INSTALLED.
6. CONNECTION TO THE EXISTING WATER MAIN SHALL BE APPROVED BY WATER COMPANY. THE DISTRICT SHALL PAY THE ACTUAL COSTS OF CONSTRUCTION. THE CONTRACTOR SHALL PERFORM ALL EXCAVATION PREPARE THE SITE, FURNISH ALL MATERIALS, INSTALL TAPPING TEE VALVE AND ALL THRUST BLOCKS. BACKFILL, RESTORE THE SURFACE, AND CLEANUP. ALL WET TAPS SHALL BE APPROVED BY THE CITY OR APPLICABLE WATER DISTRICT. NONMETALLIC WATER LINES SHALL HAVE TRACER WIRES INSTALLED.
7. ALL WATER LINES 3" OR SMALLER SHALL BE TYPE K COPPER WITH SILVER BRAZED JOINTS. POLYETHYLENE PIPE MAY BE SUBSTITUTED, CONTRACTOR SHOULD SEEK APPROVAL FROM DISTRICT BEFORE MAKING SUBSITUTION. CONTRACTOR TO VERIFY PRESSURES FROM EXISTING LINES ARE ADEQUATE TO SERVICE BUILDINGS AS SPECIFIED BY THE PLUMBING PLANS.
8. ALL WATER LINES SHALL BE INSTALLED WITH 3' MINIMUM COVER.
9. ALL WATER VALVES SHALL BE PER CITY STANDARD.
10. ALL TEMPORARY AND/OR PERMANENT AIR-RELEASE AND BLOW-OFF VALVES SHALL BE PER CITY STANDARD AND AS DIRECTED BY THE CITY ENGINEER.
11. CONCRETE THRUST BLOCKS SHALL BE INSTALLED AT ALL TEES, CROSSINGS, BENDS (HORIZONTAL AND VERTICAL), AT SIZE CHANGES AND AT FIRE HYDRANTS PER CITY STANDARD. AWWA C600, SECTION 3.8 UNLESS NOTED OTHERWISE.
12. MECHANICALLY RESTRAINED JOINTS SHALL BE INSTALLED AT VERTICAL BENDS IN ACCORDANCE WITH CITY STANDARDS AND AS APPROVED BY THE CITY ENGINEER.
13. ALL WATER VALVES SHALL BE CLUSTERED, UNLESS OTHERWISE DIRECTED BY THE CITY ENGINEER.

SANITARY SEWER NOTES:

1. INSTALL DETECTABLE METALIZED WARNING TAPE APPROXIMATELY 6"-12" BELOW THE SURFACE IN NON-PAVED AREAS, AND AT THE BOTTOM OF BASEROCK FOR PAVED AREAS. GREEN IMPRINTED WITH "CAUTION- SANITARY SEWER LINE BELOW", CALPICO TYPE 2 OR EQUAL.
2. ALL SEWER WORK SHALL BE IN CONFORMANCE WITH THE CITY OR APPROPRIATE SANITARY SEWER DISTRICT.
3. PUBLIC AND PRIVATE SANITARY SEWER MAIN AND SERVICE LINE 4-INCH THROUGH 8-INCH SHALL BE POLYVINYL CHLORIDE (PVC) SDR 26 GREEN SEWER PIPE AND SHALL CONFORM TO THE REQUIREMENTS OF ASTM DESIGNATION D 3034-08 WITH GLUED JOINTS.

SITE FENCING NOTES:

1. CONTRACTOR SHALL PROVIDE A CONSTRUCTION FENCE AROUND THE ENTIRE AREA OF DEMOLITION AND CONSTRUCTION, INCLUDING ALL STAGING, STORAGE, CONSTRUCTION OFFICE AND LAYDOWN AREAS.
2. FENCE LOCATION MAY BE ADJUSTED FROM TIME TO TIME AS CONSTRUCTION PROCEEDS TO EXCLUDE SOME AREAS WHERE CONSTRUCTION WORK IS NOT BEING DONE AND THE AREA IS NOT OBJECTIONABLE IN VISUAL APPEARANCE, AT THE DISCRETION AND APPROVAL OF THE DISTRICT STAFF.
3. CONSTRUCTION FENCE SHALL BE A MINIMUM OF A 6' HIGH GALVANIZED CHAIN LINK FENCE WITH GREEN WINDSCREEN FABRIC ON THE OUTSIDE OF THE FENCE.
4. CONTRACTOR SHALL REPLACE THE GREEN FABRIC AT LEAST ONCE A YEAR OR AT SUCH A TIME AS IT BECOMES TATTERED AND UNSIGHTLY DUE TO WIND OR CONSTRUCTION ACTIVITIES.

REGISTERED PROFESSIONAL ENGINEER
WILLIAM C. CLARK
No. 65497
Exp. 09-30-21
CIVIL
STATE OF CALIFORNIA

CLARK CIVIL ENGINEERING
DESIGN • CONSULTING • SURVEY
12700 Highway One, Point Reyes Station, CA
PH: 415-295-4450 FAX: 510-372-0259

KIM RESIDENCE
121 DOUD DRIVE
LOS ALTOS, CA

APN: 170-31-011

SANTA CLARA COUNTY

GRADING SPECIFICATIONS

REVISIONS	BY
-	-
-	-
-	-
-	-
-	-

JOB NO:	220006
DATE:	3-14-20
SCALE:	AS NOTED
DESIGN BY:	WCC
DRAWN BY:	DR
SHEET NO:	C0.2

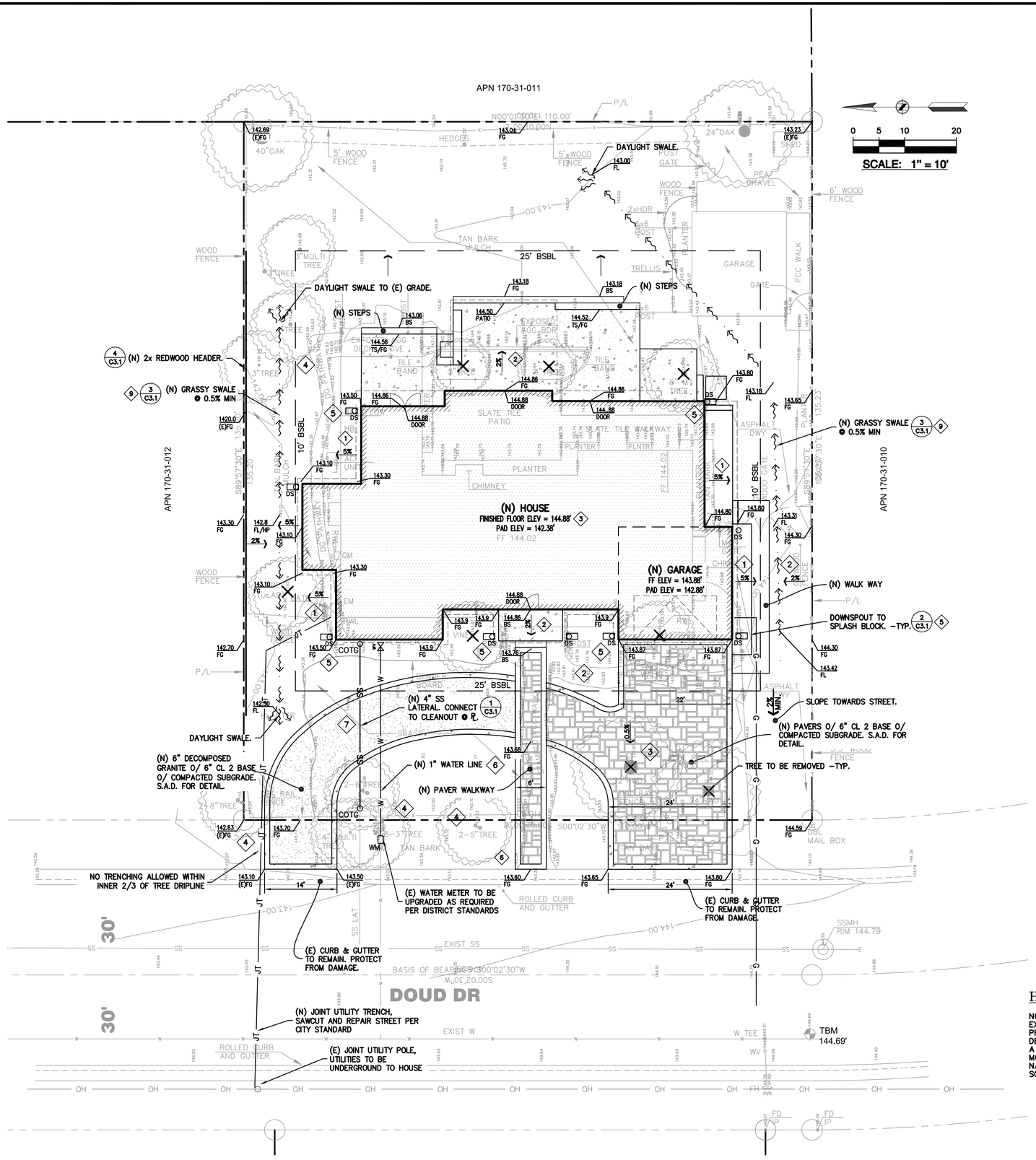

ALL ESISTING CRACKED OR DAMAGED FEATURES ALONG THE PROPERTY FRONTAGE MUST BE REPAIRED INKIND, ALL FRONTAGE IMPROVEMENT WORK SHALL BE IN ACCORDANCE WITH THE LASTEST VERSION OF THE CITY STANDARDS.

AN ENCROACHMENT PERMIT FROM THE ENGINEERING DIVISION IS REQUIRED PRIOR TO ANY CONSTRUCTION ACTIVITIES IN THE PUBLIC RIGHT OF WAY.

GRADES AROUND BUILDING NOTE:
GRADES WITHIN THE FIRST 10 FEET ADJACENT TO STRUCTURE MUST HAVE A 5% SLOPE ON PERVIOUS SURFACES AND 2% SLOPE ON IMPERVIOUS SURFACES PER 1804.A3 OF CBC

DRAINAGE NOTE:
UNDER NO CIRCUMSTANCES SHALL DRAINAGE RESULTING FROM THIS PROJECT, DURING OR POST CONSTRUCTION, DIRECT SHEETFLOW ACROSS AN ADJOINING PROPERTY. RUNOFF SHALL BE CONTAINED ON SITE UP TO 10 YEAR STORM

* BUILDING PAD NOTE:
ADJUST PAD LEVEL AS REQUIRED. REFER TO STRUCTURAL PLANS FOR SLAB SECTION OR CRAWL SPACE DEPTH TO ESTABLISH PAD LEVEL.

ALL TRENCHES IN THE PUBLIC RIGHT-OF-WAY SHALL COMPLY WITH CITY STANDARD DETAILS ST-9A, ST-9B, AND ST-16 WHERE APPLICABLE

NOTE: CONTRACTOR SHALL TAKE CARE TO ESTABLISH GRADES AS SHOWN TO ALLOW FOR POSITIVE DRAINAGE FLOW OF RUNOFF.

GENERAL NOTES

CONTRACTOR SHALL OBTAIN THE PROPER PERMITS PRIOR TO ANY GRADING.

A SEPARATE PERMIT IS REQUIRED FOR ANY & ALL WORK WITHIN THE CITY RIGHT-OF-WAY. THE CONTRACTOR(S) SHALL OBTAIN AN APPROVED STREET WORK (ENCROACHMENT PERMIT) PERMIT FROM THE PUBLIC WORKS DEPARTMENT PRIOR TO THE COMMENCEMENT OF THIS WORK WITHIN THE CITY RIGHT-OF-WAY.

CONTRACTOR SHALL PROVIDE AND MAINTAIN APPROVED EROSION AND SEDIMENTATION CONTROL MEASURES DURING RAINY SEASON PER CITY AND CALIFORNIA REGIONAL STANDARDS – REFER TO EROSION AND SEDIMENTATION CONTROL PLAN.

ALL GRADED SLOPES SHALL BE PLANTED WITH FAST GROWING, DEEP ROOTED GROUND COVER TO REDUCE THE EROSION DURING HEAVY RAINS.

SLOPE FINISHED GRADES A MINIMUM OF 5%, FOR AT LEAST THE 5 FEET TO 10 FEET FROM BUILDING PERIMETER WHERE EVER IT IS PHISICALY POSSIBLE. DIRECT SURFACE DRAINAGE RUNOFF TO DISPERSE ON-SITE.

PROVIDE 2% SLOPE ACROSS FLATWORK AND/OR PAVING AND SLOPE TO DAYLITE. REFER TO ARCHITECT'S PLANS FOR PAVEMENT TYPE, LAYOUT, AND FINISH -TYP.

CONSTRUCT EARTHEN SWALES AT 2% TYP. (1% MIN.) & BERMS AS REQUIRED TO DIRECT FLOWS TO DAYLITE. SLOPE FINISHED GRADES TO DAYLITE, TO ACCOMMODATE POSITIVE DRAINAGE AND AVOID PONDING. FOR FLOWLINES GREATER THAN 5%, PROVIDE LINED DITCH -TYP.

REFER TO ARCHITECTURAL PLANS FOR ADDITIONAL INFORMATION, INCLUDING BUT NOT LIMITED TO: ADDITIONAL UTILITY SERVICES, DIMENSION CONTROL, DEMOLITION, DETAILS, TREE PROTECTION MEASURES, AND LANDSCAPING.

PROVIDE TREE PROTECTION AS REQUIRED FOR TREES TO REMAIN.

THE CONTRACTOR SHALL OBTAIN THE PROPER TREE REMOVAL PERMIT AS REQUIRED.

CONTRACTOR SHALL NOTIFY THE OWNER AND/OR MAINTENANCE STAFF IN WRITING OF THE NEED OF PERIODIC MAINTENANCE OF THE DRAINAGE SYSTEM AND STRUCTURES.

DEMOLISH (E) STRUCTURE(S) AS REQUIRED. NO DEMOLITION SHALL COMMENCE WITHOUT REQUIRED CITY DEMOLITION PERMIT.

FINISHED GRADE ELEVATIONS NOTED AS [FG (MAX.)] ARE THE MAXIMUM ALLOWABLE GRADE AT THE BUILDING PERIMETER PER C.B.C. SECTION 2304.11.2.2 TO PROVIDE 8" MIN. CLEARANCE. THESE GRADES MAY BE LOWER PROVIDED THAT PROPER FLOW AWAY FROM THE FOUNDATION IS ACHIEVED. REFER TO ARCHITECTURAL & STRUCTURAL DRAWINGS FOR SPECIAL DETAILS AS REQUIRED.

SITE ANNOTATION KEYS

1. FINISHED GRADES AT BUILDING PERIMETER SHALL BE SLOPED AT A MIN. OF 5% FOR THE FIRST 10 FT. AWAY FROM THE BUILDING AND THEN SHALL CONTINUE TO SLOPE TO TOWARDS POSITIVE OUTFALL. MAINTAIN 8" CLEARANCE BETWEEN FINISH EARTHEN GRADE AND BOTTOM OF MUD SILL AT ALL TIMES (PER CBC), U.O.N. -TYP.
2. PROVIDE 2%(WITHIN 10 FOOT OF BUILDING) SLOPE ACROSS FLATWORK AND/OR PAVING AND SLOPE TO DAYLIGHT. REFER TO ARCHITECT'S PLANS FOR PAVEMENT TYPE, LAYOUT, AND FINISH. -TYP.
3. DEMOLISH (E) IMPROVEMENTS AS NECESSARY TO ACCOMMODATE (N) CONSTRUCTION. NO DEMOLITION SHALL COMMENCE WITHOUT REQUIRED DEMOLITION CITY PERMIT. SEE DEMOLITION PLAN.
4. PROVIDE TREE PROTECTION AROUND DRIP LINES OF (E) TREES. SEE LANDSCAPE AND/OR SEPARATE TREE PROTECTION PLANS FOR TREE PROTECTION DETAILS. CONTRACTOR TO USE EXTREME CARE WHEN EXCAVATING UNDER TREE CANOPY. HAND DIGGING MAY BE REQUIRED.
5. DIRECT ROOF DOWNSPOUT (DS) LEADERS TO SPLASH BLOCKS, PROVIDE 2' LONG SPLASH BLOCKS TO BE USED BELOW RAIN WATER LEADERS IN PERVIOUS AREAS.
6. INSTALL (N) WATER LATERAL & METER FOR (N) 1" WATER SERVICE. CONTRACTOR SHALL LOCATE PRIOR TO CONSTRUCTION PER UTILITY COMPANY STANDARDS.
7. CONNECT/RECONNECT TO (E) SEWER LATERAL AS REQUIRED. CONTRACTOR TO LOCATE PRIOR TO CONSTRUCTION AND VERIFY ADEQUACY OF SYSTEM VIA VIDEOTAPED INSPECTION. IF NEEDED, INSTALL (N) LATERAL MINIMUM 4" PVC (SDR-35 OR BETTER). SLOPED AT 2% MINIMUM. CONTRACTOR TO VERIFY INVERTS AND/OR LOCATION OF (E) UTILITIES PRIOR TO CONSTRUCTION AND INFORM ENGINEER OF ANY DISCREPANCIES. REROUTE AS REQUIRED FOR NEW CONSTRUCTION.
8. REMOVE (E) GAS METER AND UPGRADE (N) GAS LINE AND SERVICE AS REQUIRED PER UTILITY COMPANY STANDARDS. CONTRACTOR TO VERIFY INVERTS AND/OR LOCATION OF (E) UTILITIES PRIOR TO CONSTRUCTION AND INFORM ENGINEER OF ANY DISCREPANCIES.
9. CONSTRUCT (N) GRASSY SWALE. SWALE SHALL BE 12-INCHES WIDE AND 3-INCHES DEEP MIN. SLOPE @ 1% TYPICAL (0.5% MIN). DIRECT TOWARDS DAYLIGHT. HAND DIGGING MAY BE REQUIRED UNDER THE TREE CANOPY. SEE DETAIL

HYDROLOGY NOTE

NO INCREASE TO THE RUN OFF FROM THE EXISTING CONDITION IS OCCURRING THE PROPOSED DEVELOPMENT RESULTS IN A NET DECREASE OF PERVIOUS SURFACE RESULTING IN A REDUCTION OF FLOW. AND NO MODIFICATIONS HAVE BEEN MADE TO THE NATURAL DRAINAGE PATTERNS HAVE RESULTED SO NO RETENTION OF DRAINAGE IS REQUIRED.

ON-SITE IMPERVIOUS AREA

PRE-DEVELOPMENT	
HOUSE & GARAGE	= 2,784 SF
DRIVEWAY & WALKWAY	= 1,559 SF
TOTAL	= 4,340 SF
POST-DEVELOPMENT	
HOUSE & GARAGE	= 3,261 SF
PATIO	= 1,198 SF
TOTAL	= 4,176 SF
NET DECREASE OF IMPERVIOUS	= 164 SF

NOTE:
(N) DRIVEWAY CONSTRUCTED OF PERVIOUS PAVERS AND PERVIOUS DECOMPOSED GRANITE.

REGISTERED PROFESSIONAL ENGINEER
WILLIAM C. CLARK
No. 65497
Exp. 09-30-21
CIVIL
STATE OF CALIFORNIA

CLARK CIVIL ENGINEERING
DESIGN • CONSULTING • SURVEY
12700 Highway One, Point Reyes Station, CA
PH: 415-295-4450 FAX: 510-372-0259

KIM RESIDENCE
121 DOUD DRIVE
LOS ALTOS, CA
APN: 170-31-011
SANTA CLARA COUNTY

GRADING AND DRAINAGE PLAN

REVISIONS	BY
-	-
-	-
-	-
-	-
-	-

JOB NO:	220006
DATE:	7-9-20
SCALE:	AS NOTED
DESIGN BY:	WCC
DRAWN BY:	DR
SHEET NO:	C2.1

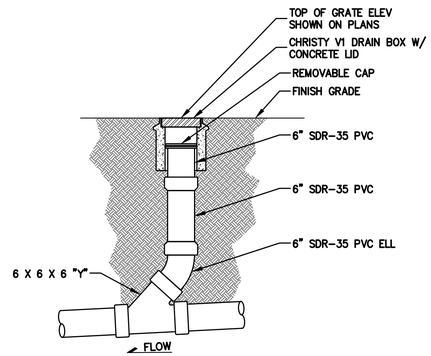

1 / C3.1 **ON-SITE CLEANOUT**
NTS

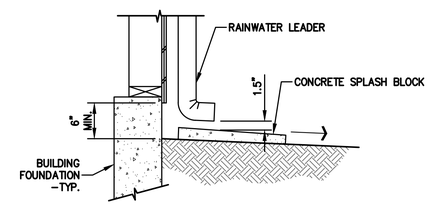

2 / C3.1 **RAIN WATER LEADER TO CONCRETE SPLASH BLOCK**
NTS

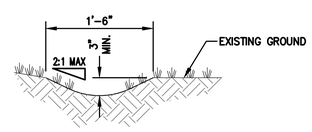

3 / C3.1 **GRASSY SWALE DETAIL**
NTS

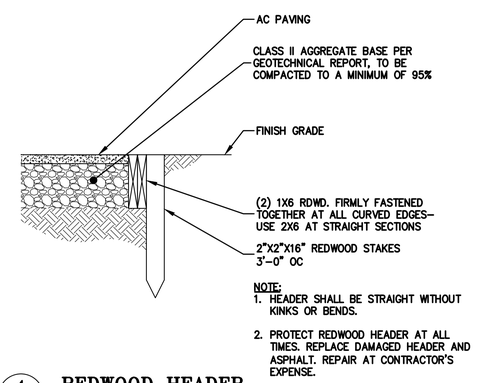

NOTE:
1. HEADER SHALL BE STRAIGHT WITHOUT KINKS OR BENDS.
2. PROTECT REDWOOD HEADER AT ALL TIMES. REPLACE DAMAGED HEADER AND ASPHALT. REPAIR AT CONTRACTOR'S EXPENSE.

4 / C3.2 **REDWOOD HEADER**
NTS

REGISTERED PROFESSIONAL ENGINEER
WILLIAM C. CLARK
No. 65497
Exp. 09-30-21
CIVIL
STATE OF CALIFORNIA

CLARK CIVIL ENGINEERING
DESIGN • CONSULTING • SURVEY
12700 Highway One, Point Reyes Station, CA
PH: 415-295-4450 FAX: 510-372-0259

KIM RESIDENCE
121 DOUD DRIVE
LOS ALTOS, CA

APN: 170-31-011
SANTA CLARA COUNTY

DETAILS

REVISIONS	BY
–	–
–	–
–	–
–	–
–	–

JOB NO:	220006
DATE:	3-14-20
SCALE:	AS NOTED
DESIGN BY:	WCC
DRAWN BY:	DR
SHEET NO:	C3.1

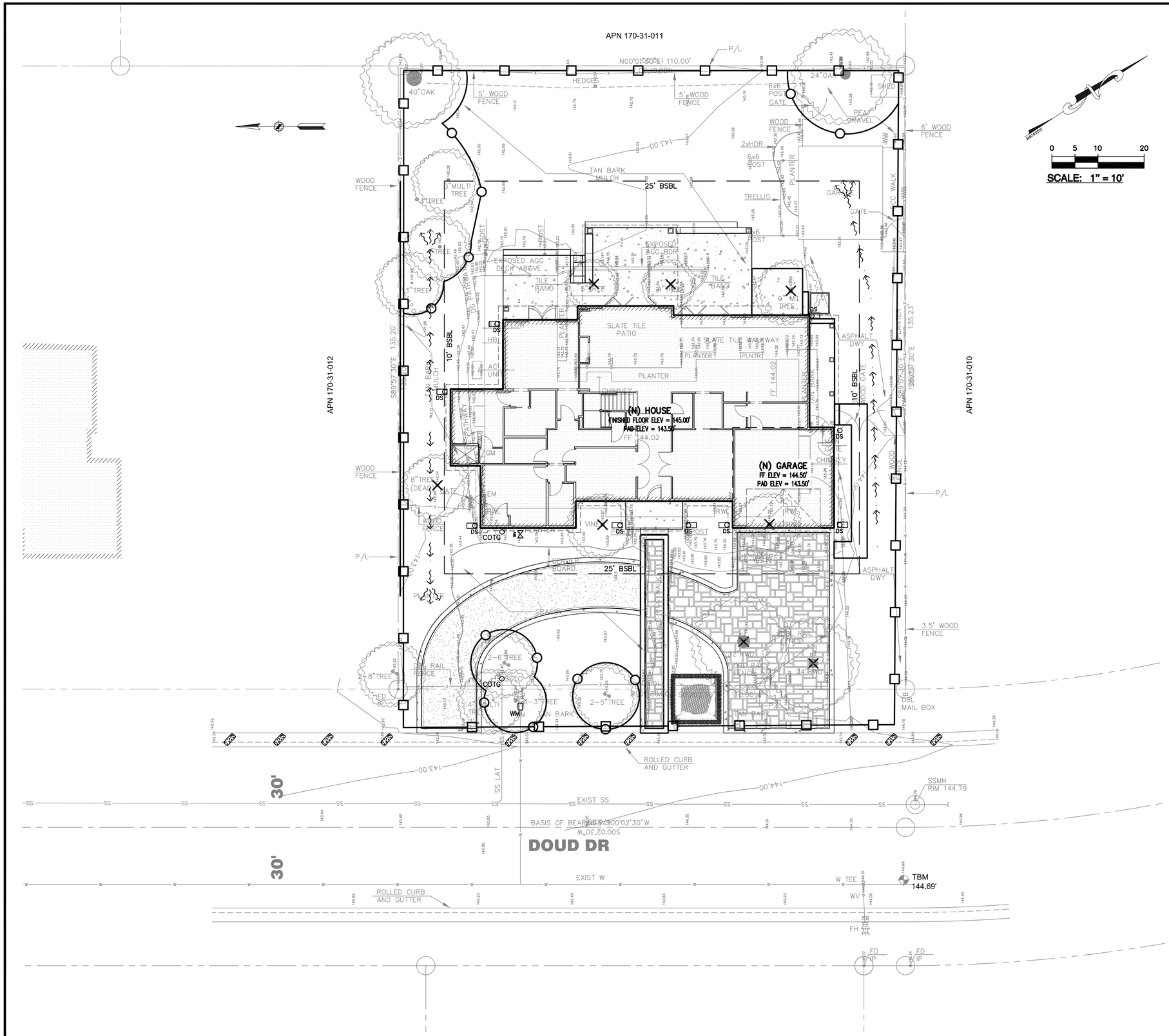

EROSION CONTROL MEASURES:

1. THE FACILITIES SHOWN ON THIS PLAN ARE DESIGNED TO CONTROL EROSION AND SEDIMENT DURING THE RAINY SEASON, OCTOBER 1ST TO APRIL 30. EROSION CONTROL FACILITIES SHALL BE IN PLACE PRIOR TO OCTOBER 1ST OF ANY YEAR. GRADING OPERATIONS DURING THE RAINY SEASON WHICH LEAVE DENUDED SLOPES SHALL BE PROTECTED WITH EROSION CONTROL MEASURES IMMEDIATELY FOLLOWING GRADING ON THE SLOPES.
2. SITE CONDITIONS AT TIME OF PLACEMENT OF EROSION CONTROL MEASURES WILL VARY. APPROPRIATE ACTION INCLUDING TEMPORARY SWALES, INLETS, HYDROSEEDING, STRAW BALES, ROCK SACKS, ETC. SHALL BE TAKEN TO PREVENT EROSION AND SEDIMENTATION FROM LEAVING SITE. EROSION CONTROL MEASURES SHALL BE ADJUSTED AS THE CONDITIONS CHANGE AND THE NEED OF CONSTRUCTION SHIFT.
3. CONSTRUCTION ENTRANCES SHALL BE INSTALLED PRIOR TO COMMENCEMENT OF GRADING. ALL CONSTRUCTION TRAFFIC ENTERING ONTO THE PAVED ROADS MUST CROSS THE STABILIZED CONSTRUCTION ENTRANCES. CONTRACTOR SHALL MAINTAIN STABILIZED ENTRANCE AT EACH VEHICLE ACCESS POINT TO EXISTING PAVED STREETS. ANY MUD OR DEBRIS TRACKED ONTO PUBLIC STREETS SHALL BE REMOVED DAILY AND AS REQUIRED BY THE GOVERNING AGENCY.
4. ALL EXPOSED SLOPES THAT ARE NOT VEGETATED SHALL BE HYDROSEEDED. IF HYDROSEEDING IS NOT USED OR IS NOT EFFECTIVE BY OCTOBER 15, THEN OTHER IMMEDIATE METHODS SHALL BE IMPLEMENTED, SUCH AS EROSION CONTROL BLANKETS, OR A THREE-STEP APPLICATION OF 1) SEED, MULCH, FERTILIZER 2) BLOWN STRAW 3) TACKIFIER AND MULCH. HYDROSEEDING SHALL BE IN ACCORDANCE WITH THE PROVISIONS OF SECTION 20" EROSION CONTROL AND HIGHWAY PLANTING" OF THE STANDARD SPECIFICATION OF THE STATE OF CALIFORNIA DEPARTMENT OF TRANSPORTATION, AS LAST REVISED. REFER TO THE EROSION CONTROL SECTION OF THE GRADING SPECIFICATIONS THAT ARE A PART OF THIS PLAN SET FOR FURTHER INFORMATION.
5. INLET PROTECTION SHALL BE INSTALLED AT OPEN INLETS TO PREVENT SEDIMENT FROM ENTERING THE STORM DRAIN SYSTEM. INLETS NOT USED IN CONJUNCTION WITH EROSION CONTROL ARE TO BE BLOCKED TO PREVENT ENTRY OF SEDIMENT. MINIMUM INLET PROTECTION SHALL CONSIST OF A ROCK SACKS OR AS SHOWN ON THIS PLAN
6. THIS EROSION AND SEDIMENT CONTROL PLAN MAY NOT COVER ALL THE SITUATIONS THAT MAY ARISE DURING CONSTRUCTION DUE TO UNANTICIPATED FIELD CONDITIONS. VARIATIONS AND ADDITIONS MAY BE MADE TO THIS PLAN IN THE FIELD. A REPRESENTATIVE OF CLARK CIVIL ENGINEERING SHALL PERFORM A FIELD REVIEW AND MAKE RECOMMENDATIONS AS NEEDED. CONTRACTOR IS RESPONSIBLE TO NOTIFY CLARK CIVIL ENGINEERING AND THE GOVERNING AGENCY OF ANY CHANGES.
7. THE EROSION CONTROL MEASURES SHALL CONFORM TO THE COUNTY STANDARDS AND THE APPROVAL OF THE COUNTY'S ENGINEERING DEPARTMENT.
8. STRAW ROLLS SHALL BE PLACED AT THE TOE OF SLOPES AND ALONG THE DOWNSLOPE PERIMETER OF THE PROJECT. THEY SHALL BE PLACED AT 25 FOOT INTERVALS ON GRADED SLOPES. PLACEMENT SHALL RUN WITH THE CONTOURS AND ROLLS SHALL BE TIGHTLY ENDBUTTED. CONTRACTOR SHALL REFER TO MANUFACTURES SPECIFICATIONS FOR PLACEMENT AND INSTALLATION INSTRUCTIONS.

REFERENCES:

1. CALIFORNIA REGIONAL WATER QUALITY CONTROL BOARD'S FIELD MANUAL FOR EROSION AND SEDIMENTATION CONTROL
2. CALIFORNIA STORM WATER QUALITY ASSOCIATION BEST MANAGEMENT PRACTICES HANDBOOK FOR CONSTRUCTION

PURPOSE:

THE PURPOSE OF THIS PLAN IS TO STABILIZE THE SITE TO PREVENT EROSION OF GRADED AREAS AND TO PREVENT SEDIMENTATION FROM LEAVING THE CONSTRUCTION AREA AND AFFECTING NEIGHBORING SITES, NATURAL AREAS, PUBLIC FACILITIES OR ANY OTHER AREA THAT MIGHT BE AFFECTED BY SEDIMENTATION. ALL MEASURES SHOWN ON THIS PLAN SHOULD BE CONSIDERED THE MINIMUM REQUIREMENTS NECESSARY. SHOULD FIELD CONDITIONS DICTATE ADDITIONAL MEASURES, SUCH MEASURES SHALL BE PER CALIFORNIA REGIONAL WATER QUALITY CONTROL BOARD'S FIELD MANUAL FOR EROSION AND SEDIMENTATION CONTROL AND THE CALIFORNIA STORM WATER QUALITY ASSOCIATION BEST MANAGEMENT PRACTICES HANDBOOK FOR CONSTRUCTION. CLARK CIVIL ENGINEERING SHOULD BE NOTIFIED IMMEDIATELY SHOULD CONDITIONS CHANGE.

EROSION CONTROL LEGEND

- GRAVEL BAG
- INLET PROTECTION
- STRAW ROLL
- TREE PROTECTION
- CONCRETE WASHOUT

REGISTERED PROFESSIONAL ENGINEER
WILLIAM C. CLARK
No. 65497
Exp. 09-30-21
CIVIL
STATE OF CALIFORNIA

CLARK CIVIL ENGINEERING
DESIGN • CONSULTING • SURVEY
12700 Highway One, Point Reyes Station, CA
PH: 415-289-4450 FAX: 510-372-0259

KIM RESIDENCE
121 DOUD DRIVE
LOS ALTOS, CA
APN: 170-31-011
SANTA CLARA COUNTY

EROSION CONTROL PLAN

–	–
–	–
–	–
–	–
–	–
REVISIONS	BY

JOB NO:	220006
DATE:	3-14-20
SCALE:	AS NOTED
DESIGN BY:	WCC
DRAWN BY:	DR
SHEET NO:	C4.1

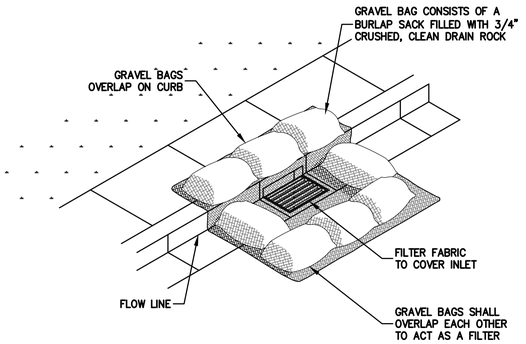

1 C4.2 **GRAVEL BAG INLET PROTECTION**
NTS

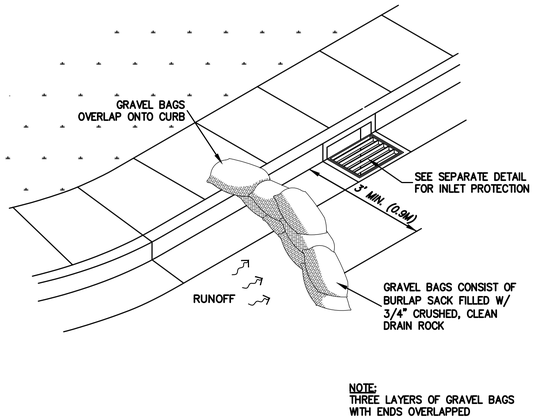

2 C4.2 **GRAVEL BAG DIKE**
NTS

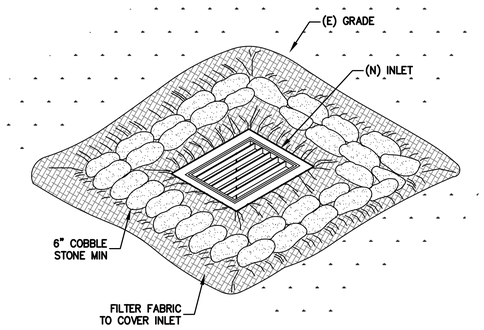

3 C4.2 **INLET PROTECTION**
NTS

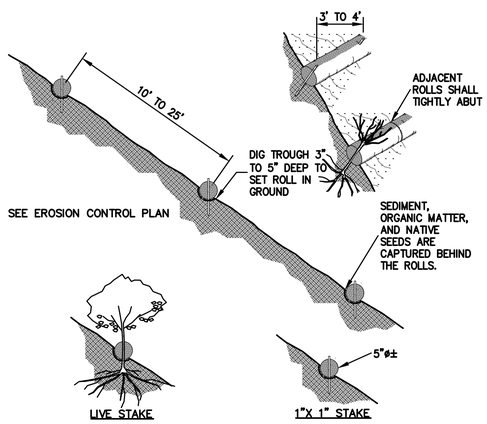

NOTE:
1. STRAW ROLL INSTALLATION REQUIRES THE PLACEMENT AND SECURE STAKING OF THE ROLL IN A TRENCH, 3" TO 5" DEEP, DUG ON CONTOUR. RUNOFF MUST NOT BE ALLOWED TO RUN UNDER OR AROUND ROLL.
2. CONTRACTOR IS RESPONSIBLE FOR REGULAR MAINTENANCE AND INSPECTION. THE SILT SHALL BE CLEANED OUT WHEN IT REACHES HALF THE HEIGHT OF THE ROLL.

4 C4.2 **STRAW ROLLS**
NTS

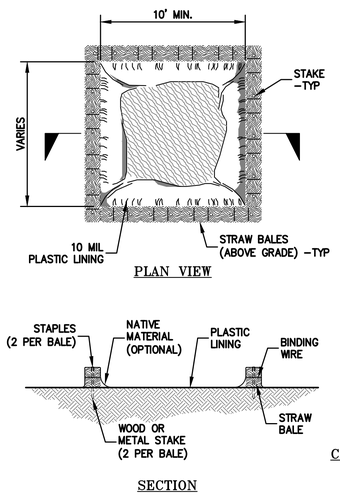

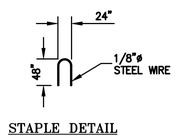

STAPLE DETAIL

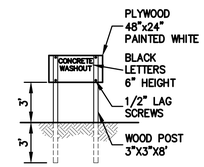

CONCRETE WASHOUT SIGN DETAIL

NOTES:
ACTUAL LAYOUT DETERMINED IN FIELD.

THE CONCRETE WASHOUT SIGN SHALL BE INSTALLED WITHIN 10' OF THE TEMPORARY CONCRETE WASHOUT FACILITY.

5 C4.2 **CONCRETE WASHOUT**
NTS

EROSION CONTROL NOTES:

1. IT SHALL BE THE OWNER'S/CONTRACTOR'S RESPONSIBILITY TO MAINTAIN CONTROL OF THE ENTIRE CONSTRUCTION OPERATION AND TO KEEP THE ENTIRE SITE IN COMPLIANCE WITH THIS EROSION CONTROL PLAN.
2. THE INTENTION OF THIS PLAN IS FOR INTERIM EROSION AND SEDIMENT CONTROL ONLY. ALL EROSION CONTROL MEASURES SHALL CONFORM TO CALIFORNIA REGIONAL WATER QUALITY CONTROL BOARD'S FIELD MANUAL FOR EROSION AND SEDIMENTATION CONTROL, THE CALIFORNIA STORM WATER QUALITY ASSOCIATION BEST MANAGEMENT PRACTICES HANDBOOK FOR CONSTRUCTION, AND THE LOCAL GOVERNING AGENCY FOR THIS PROJECT.
3. OWNER/CONTRACTOR SHALL BE RESPONSIBLE FOR MONITORING EROSION AND SEDIMENT CONTROL MEASURES PRIOR TO, DURING, AND AFTER STORM EVENTS. PERSON IN CHARGE OF MAINTAINING EROSION CONTROL MEASURES SHOULD WATCH LOCAL WEATHER REPORTS AND ACT APPROPRIATELY TO MAKE SURE ALL NECESSARY MEASURES ARE IN PLACE.
4. SANITARY FACILITIES SHALL BE MAINTAINED ON THE SITE AT ALL TIMES.
5. DURING THE RAINY SEASON, ALL PAVED AREAS SHALL BE KEPT CLEAR OF EARTH MATERIAL AND DEBRIS. THE SITE SHALL BE MAINTAINED SO AS TO MINIMIZE SEDIMENT-LADEN RUNOFF TO ANY STORM DRAINAGE SYSTEM, INCLUDING EXISTING DRAINAGE SWALES AND WATERCOURSES.
6. CONSTRUCTION OPERATIONS SHALL BE CARRIED OUT IN SUCH A MANNER THAT EROSION AND WATER POLLUTION WILL BE MINIMIZED. COMPLIANCE WITH FEDERAL, STATE AND LOCAL LAWS CONCERNING POLLUTION SHALL BE MAINTAINED AT ALL TIMES.
7. CONTRACTOR SHALL PROVIDE DUST CONTROL AS REQUIRED BY THE APPROPRIATE FEDERAL, STATE AND LOCAL AGENCY REQUIREMENTS.
8. ALL MATERIALS NECESSARY FOR THE APPROVED EROSION CONTROL MEASURES SHALL BE IN PLACE BY OCTOBER 1ST.
9. EROSION CONTROL SYSTEMS SHALL BE INSTALLED AND MAINTAINED THROUGHOUT THE RAINY SEASON, OR FROM OCTOBER 1ST THROUGH APRIL 30, WHICHEVER IS LONGER.
10. IN THE EVENT OF RAIN, ALL GRADING WORK IS TO CEASE IMMEDIATELY AND THE SITE IS TO BE SEALED IN ACCORDANCE WITH THE APPROVAL EROSION CONTROL MEASURES AND APPROVED EROSION CONTROL PLAN.
11. THE CONTRACTOR SHALL BE RESPONSIBLE FOR CHECKING AND REPAIRING EROSION CONTROL SYSTEMS AFTER EACH STORM.
12. ADDITIONAL EROSION CONTROL MEASURES MAY BE REQUIRED BY COUNTY'S ENGINEERING DEPARTMENT OR BUILDING OFFICIALS.
13. MEASURES SHALL BE TAKEN TO COLLECT OR CLEAN ANY ACCUMULATION OR DEPOSIT OF DIRT, MUD, SAND, ROCKS, GRAVEL OR DEBRIS ON THE SURFACE OF ANY STREET, ALLEY OR PUBLIC PLACE OR IN ANY PUBLIC STORM DRAIN SYSTEMS. THE REMOVAL OF AFORESAID SHALL BE DONE BY STREET SWEEPING OR HAND SWEEPING. WATER SHALL NOT BE USED TO WASH SEDIMENTS INTO PUBLIC OR PRIVATE DRAINAGE FACILITIES.
14. EROSION CONTROL MEASURES SHALL BE ON-SITE FROM SEPTEMBER 15TH THRU APRIL 30

. ALL EROSION CONTROL MEASURES SHALL BE INSTALLED AND MAINTAINED THROUGHOUT THE RAINY SEASON OR FROM OCTOBER 15 THRU APRIL 30, WHICHEVER IS GREATER.

PERIODIC MAINTENANCE:

1. MAINTENANCE IS TO BE PERFORMED AS FOLLOWS:
   - A. DAMAGES CAUSED BY SOIL EROSION OR CONSTRUCTION SHALL BE REPAIRED AT THE END OF EACH WORKING DAY.
   - B. SWALES SHALL BE INSPECTED PERIODICALLY AND MAINTAINED AS NEEDED.
   - C. SEDIMENT TRAPS, BERMS, AND SWALES ARE TO BE INSPECTED AFTER EACH STORM AND REPAIRS MADE AS NEEDED.
   - D. SEDIMENT SHALL BE REMOVED AND SEDIMENT TRAP RESTORED TO ITS ORIGINAL DIMENSIONS WHEN SEDIMENT HAS ACCUMULATED TO A DEPTH OF 1' FOOT.
   - E. SEDIMENT REMOVED FROM TRAP SHALL BE DEPOSITED IN A SUITABLE AREA AND IN SUCH A MANNER THAT IT WILL NOT ERODE.
   - F. RILLS AND GULLIES MUST BE REPAIRED.
2. GRAVEL BAG INLET PROTECTION SHALL BE CLEANED OUT WHENEVER SEDIMENT DEPTH IS ONE HALF THE HEIGHT OF ONE GRAVEL BAG.
3. STRAW ROLLS SHALL BE PERIODICALLY CHECKED TO ASSURE PROPER FUNCTION AND CLEANED OUT WHENEVER THE SEDIMENT DEPTH REACHED HALF THE HEIGHT OF THE ROLL.
4. SILT FENCE SHALL BE PERIODICALLY CHECKED TO ASSURE PROPER FUNCTION AND CLEANED OUT WHENEVER THE SEDIMENT DEPTH REACHES ONE FOOT IN HEIGHT.
5. CONSTRUCTION ENTRANCE SHALL BE REGRAVELED AS NECESSARY FOLLOWING SILT/SOIL BUILDUP.
6. ANY OTHER EROSION CONTROL MEASURES SHOULD BE CHECKED AT REGULAR INTERVALS TO ASSURE PROPER FUNCTION

REGISTERED PROFESSIONAL ENGINEER
WILLIAM C. CLARK
No. 65497
Exp. 09-30-21
CIVIL
STATE OF CALIFORNIA

CLARK CIVIL ENGINEERING
DESIGN • CONSULTING • SURVEY
12700 Highway One, Point Reyes Station, CA
PH: 415-293-4450 FAX: 510-372-0259

KIM RESIDENCE
121 DOUD DRIVE
LOS ALTOS, CA
APN: 170-31-011
SANTA CLARA COUNTY

EROSION CONTROL DETAILS

REVISIONS	BY
–	–
–	–
–	–
–	–
–	–

JOB NO:	220006
DATE:	3-14-20
SCALE:	AS NOTED
DESIGN BY:	WCC
DRAWN BY:	DR
SHEET NO:	C4.2

Construction Best Management Practices (BMPs)

Construction projects are required to implement the stormwater best management practices (BMP) on this page, as they apply to your project, all year long.

Materials & Waste Management

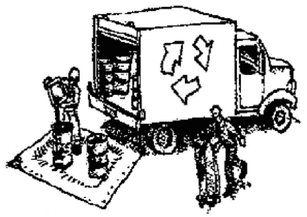

Non-Hazardous Materials

- ❑ Berm and cover stockpiles of sand, dirt or other construction material with tarps when rain is forecast or if not actively being used within 14 days.
- ❑ Use (but don't overuse) reclaimed water for dust control.

Hazardous Materials

- ❑ Label all hazardous materials and hazardous wastes (such as pesticides, paints, thinners, solvents, fuel, oil, and antifreeze) in accordance with city, county, state and federal regulations.
- ❑ Store hazardous materials and wastes in water tight containers, store in appropriate secondary containment, and cover them at the end of every work day or during wet weather or when rain is forecast.
- ❑ Follow manufacturer's application instructions for hazardous materials and be careful not to use more than necessary. Do not apply chemicals outdoors when rain is forecast within 24 hours.
- ❑ Arrange for appropriate disposal of all hazardous wastes.

Waste Management

- ❑ Cover waste disposal containers securely with tarps at the end of every work day and during wet weather.
- ❑ Check waste disposal containers frequently for leaks and to make sure they are not overfilled. Never hose down a dumpster on the construction site.
- ❑ Clean or replace portable toilets, and inspect them frequently for leaks and spills.
- ❑ Dispose of all wastes and debris properly. Recycle materials and wastes that can be recycled (such as asphalt, concrete, aggregate base materials, wood, gyp board, pipe, etc.)
- ❑ Dispose of liquid residues from paints, thinners, solvents, glues, and cleaning fluids as hazardous waste.

Construction Entrances and Perimeter

- ❑ Establish and maintain effective perimeter controls and stabilize all construction entrances and exits to sufficiently control erosion and sediment discharges from site and tracking off site.
- ❑ Sweep or vacuum any street tracking immediately and secure sediment source to prevent further tracking. Never hose down streets to clean up tracking.

Equipment Management & Spill Control

Maintenance and Parking

- ❑ Designate an area, fitted with appropriate BMPs, for vehicle and equipment parking and storage.
- ❑ Perform major maintenance, repair jobs, and vehicle and equipment washing off site.
- ❑ If refueling or vehicle maintenance must be done onsite, work in a bermed area away from storm drains and over a drip pan big enough to collect fluids. Recycle or dispose of fluids as hazardous waste.
- ❑ If vehicle or equipment cleaning must be done onsite, clean with water only in a bermed area that will not allow rinse water to run into gutters, streets, storm drains, or surface waters.
- ❑ Do not clean vehicle or equipment onsite using soaps, solvents, degreasers, steam cleaning equipment, etc.

Spill Prevention and Control

- ❑ Keep spill cleanup materials (rags, absorbents, etc.) available at the construction site at all times.
- ❑ Inspect vehicles and equipment frequently for and repair leaks promptly. Use drip pans to catch leaks until repairs are made.
- ❑ Clean up spills or leaks immediately and dispose of cleanup materials properly.
- ❑ Do not hose down surfaces where fluids have spilled. Use dry cleanup methods (absorbent materials, cat litter, and/or rags).
- ❑ Sweep up spilled dry materials immediately. Do not try to wash them away with water, or bury them.
- ❑ Clean up spills on dirt areas by digging up and properly disposing of contaminated soil.
- ❑ Report significant spills immediately. You are required by law to report all significant releases of hazardous materials, including oil. To report a spill: 1) Dial 911 or your local emergency response number, 2) Call the Governor's Office of Emergency Services Warning Center, (800) 852-7550 (24 hours).

Earthwork & Contaminated Soils

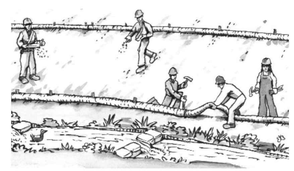

Erosion Control

- ❑ Schedule grading and excavation work for dry weather only.
- ❑ Stabilize all denuded areas, install and maintain temporary erosion controls (such as erosion control fabric or bonded fiber matrix) until vegetation is established.
- ❑ Seed or plant vegetation for erosion control on slopes or where construction is not immediately planned.

Sediment Control

- ❑ Protect storm drain inlets, gutters, ditches, and drainage courses with appropriate BMPs, such as gravel bags, fiber rolls, berms, etc.
- ❑ Prevent sediment from migrating offsite by installing and maintaining sediment controls, such as fiber rolls, silt fences, or sediment basins.
- ❑ Keep excavated soil on the site where it will not collect into the street.
- ❑ Transfer excavated materials to dump trucks on the site, not in the street.
- ❑ Contaminated Soils
- ❑ If any of the following conditions are observed, test for contamination and contact the Regional Water Quality Control Board:
  - ■ Unusual soil conditions, discoloration, or odor.
  - ■ Abandoned underground tanks.
  - ■ Abandoned wells
  - ■ Buried barrels, debris, or trash.

Paving/Asphalt Work

- ❑ Avoid paving and seal coating in wet weather, or when rain is forecast before fresh pavement will have time to cure.
- ❑ Cover storm drain inlets and manholes when applying seal coat, tack coat, slurry seal, fog seal, etc.
- ❑ Collect and recycle or appropriately dispose of excess abrasive gravel or sand. Do NOT sweep or wash it into gutters.
- ❑ Do not use water to wash down fresh asphalt concrete pavement.

Sawcutting & Asphalt/Concrete Removal

- ❑ Completely cover or barricade storm drain inlets when saw cutting. Use filter fabric, catch basin inlet filters, or gravel bags to keep slurry out of the storm drain system.
- ❑ Shovel, abosorb, or vacuum saw-cut slurry and dispose of all waste as soon as you are finished in one location or at the end of each work day (whichever is sooner!).
- ❑ If sawcut slurry enters a catch basin, clean it up immediately.

Concrete, Grout & Mortar Application

- ❑ Store concrete, grout and mortar under cover, on pallets and away from drainage areas. These materials must never reach a storm drain.
- ❑ Wash out concrete equipment/trucks offsite or in a contained area, so there is no discharge into the underlying soil or onto surrounding areas. Let concrete harden and dispose of as garbage.
- ❑ Collect the wash water from washing exposed aggregate concrete and remove it for appropriate disposal offsite.

Dewatering

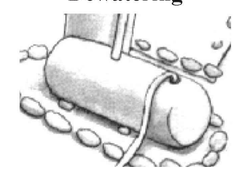

- ❑ Effectively manage all run-on, all runoff within the site, and all runoff that discharges from the site. Divert run-on water from offsite away from all disturbed areas or otherwise ensure compliance.
- ❑ When dewatering, notify and obtain approval from the local municipality before discharging water to a street gutter or storm drain. Filtration or diversion through a basin, tank, or sediment trap may be required.
- ❑ In areas of known contamination, testing is required prior to reuse or discharge of groundwater. Consult with the Engineer to determine whether testing is required and how to interpret results. Contaminated groundwater must be treated or hauled off-site for proper disposal.

Painting & Paint Removal

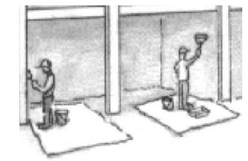

Painting cleanup

- ❑ Never clean brushes or rinse paint containers into a street, gutter, storm drain, or surface waters.
- ❑ For water-based paints, paint out brushes to the extent possible. Rinse to the sanitary sewer once you have gained permission from the local wastewater treatment authority. Never pour paint down a drain.
- ❑ For oil-based paints, paint out brushes to the extent possible and clean with thinner or solvent in a proper container. Filter and reuse thinners and solvents. Dispose of residue and unusable thinner/solvents as hazardous waste.

Paint removal

- ❑ Chemical paint stripping residue and chips and dust from marine paints or paints containing lead or tributyltin must be disposed of as hazardous waste.
- ❑ Paint chips and dust from non-hazardous dry stripping and sand blasting may be swept up or collected in plastic drop cloths and disposed of as trash.

Landscape Materials

- ❑ Contain stockpiled landscaping materials by storing them under tarps when they are not actively being used.
- ❑ Stack erodible landscape material on pallets. Cover or store these materials when they are not actively being used or applied.
- ❑ Discontinue application of any erodible landscape material within 2 days before a forecast rain event or during wet weather.

Storm drain polluters may be liable for fines of up to $10,000 per day!

REGISTERED PROFESSIONAL ENGINEER
WILLIAM C. CLARK
No. 65497
Exp. 09-30-21
CIVIL
STATE OF CALIFORNIA

CLARK CIVIL ENGINEERING
DESIGN • CONSULTING • SURVEY
12700 Highway One, Point Reyes Station, CA
PH: 415-293-4450 FAX: 510-372-0259

KIM RESIDENCE
121 DOUD DRIVE
LOS ALTOS, CA

APN: 170-31-011

SANTA CLARA COUNTY

CONSTRUCTION BEST MANAGEMENT PRACTICES (SWPPP)

REVISIONS	BY
–	–
–	–
–	–
–	–
–	–

JOB NO:	220006
DATE:	3-14-20
SCALE:	AS NOTED
DESIGN BY:	WCC
DRAWN BY:	DR
SHEET NO:	C4.3

Pistacia chinensis
Chinese Pistache 24" Box
8-10' x 2-3' (Height x Width)
<30-60' x 20-40' (At Maturity)
Growth Rate: Moderate

Podocarpus gracilior
Fern Pine 15 Gal.
5-6' x 16-20" (IIeight x Width)
30-50' x 15-20' (At Maturity)
Growth Rate: Slow

Cornus florida var. Alba
White Dogwood 24 Box
7-9' x 2-3' (Height x Width)
<25' x <25' (At Maturity)
Growth Rate: Moderate

Pittosporum tenuifolium
Blackstem Pittosporum 5 Gal.
12-16"x 10-14" (Height x Width)
12-16'x 6-8' (At Maturity)
Growth Rate: Moderate

Prunus caroliniana
Carolina Laurel Cherry 5 Gal.
2-3' x 12-16" (Height x Width)
8-10' x 6-8' (At Maturity)
Growth Rate: Moderate to Fast

Ligustrum japonicum
Japanese Privet 5 Gal.
2-2.5'x 1.5'-2' (Height x Width)
10-12'x 8' (At Maturity)
Growth Rate: Moderate

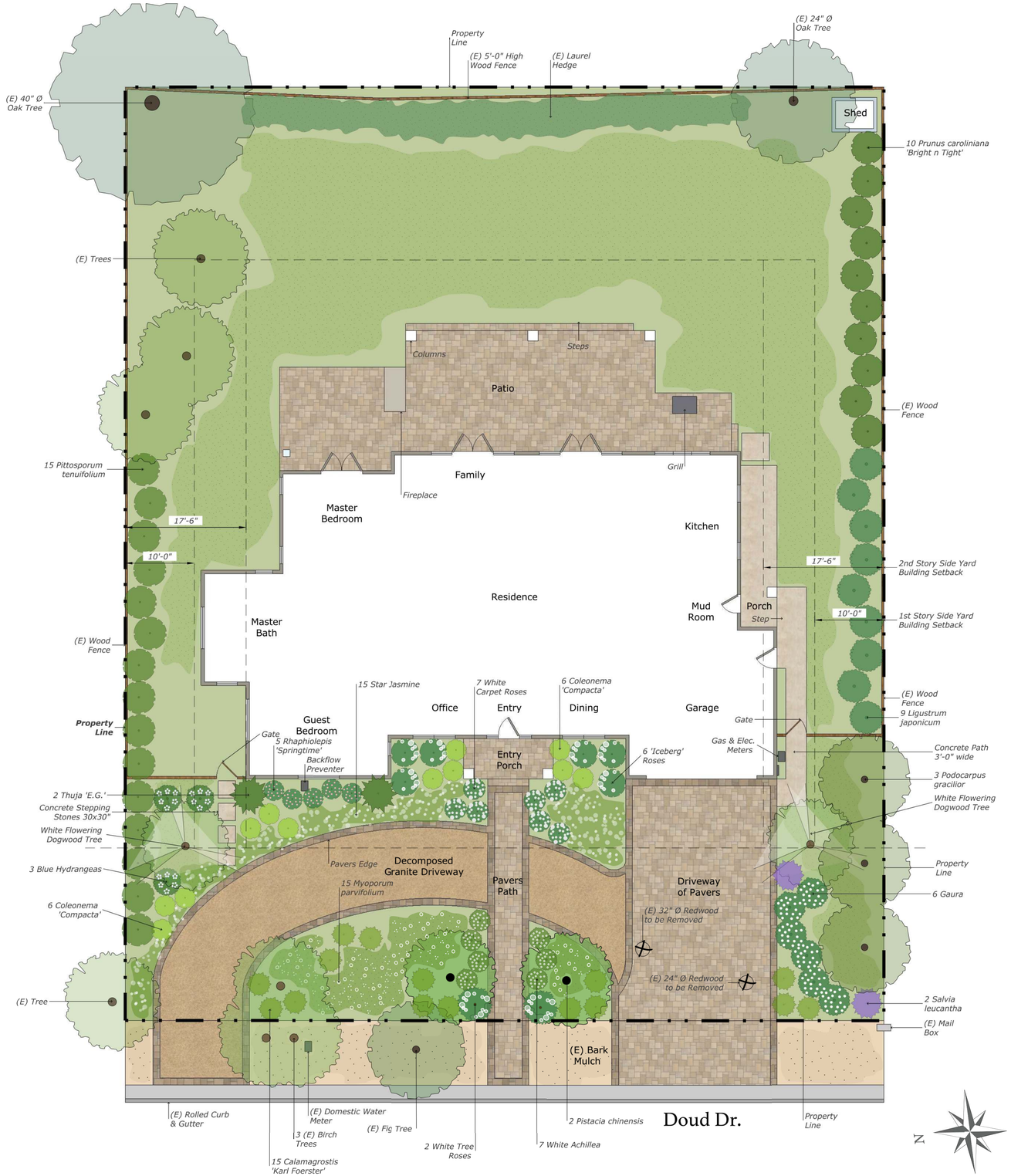

*** NOTES (E) = Existing**

REVISIONS	BY

Karen Aitken & Associates
Landscape Architecture & Design

KAREN AITKEN & ASSOCIATES
LANDSCAPE ARCHITECTS
8262 Rancho Real Gilroy Ca. 95020
Calif. Reg.#2239 (408) 842-0245
karen@KAA.Design

KIM RESIDENCE
121 Doud Dr., Los Altos, CA.

LANDSCAPE PLAN

LICENSED LANDSCAPE ARCHITECT
KAREN JONES AITKEN
No. 2239
Exp. 8-31-21
STATE OF CALIFORNIA

DATE	07-09-2020
SCALE	1/8"=1'-0"
DRAWN	SL & AD
JOB	KIM

L-1