PROJECT TEAM

OWNER

BOBBY & FLORENCE LAIO
P.O. Box 2062
Los Altos, California 94023

ARCHITECT

M. SANDOVAL ARCHITECTS, INC.
885 North San Antonio Road
Los Altos, California 94022
Peninsula and South Bay
Phone: (650) 941-8048
Fax: (650) 941-8069
San Francisco and North Bay
Phone: (415) 924-7059
Fax: (415) 924-7269
Email: msa@msandovalarchitects.com
www.msandovalarchitects.com

Contact: Mark Sandoval, AIA

CIVIL ENGINEERING CONSULTANT

LEA & BRAZE ENGINEERING, INC.
2495 Industrial Parkway West
Hayward, California 94545
Phone: (510) 887-4086
Fax: (510) 887-3019
Email: LEABRAZ.COM

Contact: Ryan Barton, P.E.

INDEX TO DRAWINGS

CIVIL

C-1.0 TITLE SHEET
C-2.0 GRADING & DRAINAGE PLAN
C-3.0 GRADING SPECIFICATIONS
C-4.0 DETAILS
ER-1 EROSION CONTROL PLAN
ER-2 EROSION CONTROL DETAILS
BLUEPRINT FOR A CLEAN BAY

ARCHITECTURAL

A0.1 TITLE SHEET, GENERAL NOTES, VICINITY MAP
A0.2 SQUARE FOOTAGE DIAGRAMS
A0.3 NEIGHBORHOOD CONTEXT SHEET
A1.1 SITE PLAN
A2.1 BASEMENT FLOOR PLAN
A2.2 FIRST FLOOR PLAN
A2.3 SECOND FLOOR PLAN
A2.4 ROOF PLAN
A3.1 BUILDING SECTIONS
A3.2 EXTERIOR ELEVATIONS
A3.3 EXTERIOR ELEVATIONS

TABULATIONS

PROJECT ADDRESS: 181 ALVARADO AVENUE
LOS ALTOS, CA

ZONING: R1-10

NET LOT AREA: 19,177 SF.

MAXIMUM COVERAGE ALLOWED: 5,753 SF.

PROPOSED LOT COVERAGE: 3,777 SF.

MAXIMUM FLOOR AREA ALLOWED

19,177 SF. - 11,000 = 8,177 x 0.10 = 817 + 3,850 = 4,668 SF.

PROPOSED FLOOR AREA

BASEMENT 1,293 SF. (EXCLUDED FROM FLOOR AREA CALCULATION)

GARAGE: 622 SF.

FIRST FLOOR: 2,985 SF.

SECOND FLOOR: 1,022 SF.

TOTAL PROPOSED F.A.R: 4,629 SF. < 4,668 SF.

GENERAL NOTES

1. All construction work shall conform to the provisions outlined in the following Code of Regulations: 2013 California Building Code (CBC), 2013 California Residential Code (CRC), 2013 California Electrical Code (CEC), 2013 California Mechanical Code (CMC), 2013 California Plumbing Code (CPC), 2013 California Green Building Standards Code, 2010 Energy Code, 2010 California Historical Building Code, and the City of Campbell Ordinances including provision regulated and/or enforced by the Planning, Building, and Public Work Departments in addition to any State, or other applicable regulations imposed by any public agency having jurisdiction over any part of this Project.
2. All contractors and subcontractors performing any general construction, mechanical, electrical, plumbing and/or any related type of work or activity, shall comply with all applicable sections of the above listed codes and regulations.
3. All addenda, bulletins and notices issued later by the Architect shall be considered as part of work.
4. The Contractor shall be responsible in providing all the necessary means including all temporary shoring and support apparatus, fencing, barriers, lighting, pedestrian and vehicular warning signs, coverings, fire protection, materials and equipment to protect the safety of all persons, property and site features including landscaping, through out the entire period of the Construction Contract.
5. It shall be the Contractor's responsibility to examine the Plans and Specifications, Codes and Standards and conditions at the job site before submitting his bid, to determine the extent of work to be done. No allowances will subsequently be made in the Contractor's behalf for any extra expense to which he may be put due to failure on his part to acquaint himself with these Plans and Specifications, or the conditions at the job site.
6. In the event there are found discrepancies or ambiguities in or omissions from the Specifications, and or the Drawings etc., or should there be doubt as to their meaning and intent, the Contractor shall notify the Architect in order to provide a written clarification.
7. The Contractor shall be responsible for continuous clean up of the site and of all debris created by his work or the failure of his subcontractors to clean up after their work.
8. It shall be the responsibility of the Contractor to obtain approval by the building inspector for all concealed work before closing up.
9. It shall be the responsibility of the Contractor to supervise all cutting and patching of finished work already installed if made necessary by errors, changes, or other reasons and all replacement work shall match adjoining surfaces.
10. All parts of the work which are noted in the Drawings or Specifications contained herein, to be reviewed for their conformance with the Contract Documents by the Architect and or the Project's consultants shall be the responsibility of the Contractor to notify the Architect seven days prior to the commencement of such work.
11. All shop drawings, samples, and or related materials requested by the Architect and /or the Owner shall be furnished in a timely manner not to delay the scheduling of the work, or impact the Project's construction time.

SYMBOLS

BUILDING SECTION
SECTION IDENTIFICATION
SHEET NUMBER

DETAIL
SECTION IDENTIFICATION
SHEET NUMBER

ELEVATION POINT

COLUMN LINE GRID

INTERIOR ELEVATIONS
DIRECTION IN ROOM
ELEVATION IDENTIFICATION
SHEET NUMBER

WINDOW NUMBER

DOOR NUMBER
DOOR NUMBER
DOOR TYPE & HARDWARE GROUP

100 ROOM NUMBER

WALL SYMBOLS
INDICATES EXISTING WALL OR PARTITION TO REMAIN
INDICATES EXISTING WALL OR PARTITION TO BE REMOVED
INDICATES NEW WALL OR PARTITION

A WALL TYPE

ABBREVIATIONS

A.B.	Anchor Bolt
A.C.	Asp halted Concrete
ACOUS.	Acoustical
A.D.	Area Drain
ADJ.	Adjustable
A.F.F.	Above Finished Floor
AGGR.	Aggregate
AL.	Aluminum
ALT.	Alternate
APROX.	Approximate
ARCH.	Architectural
ABB.	Asbestos
ASPH.	Asphalt
BD.	Board
BET.	Between
BIT.	Bituminous
BLDG.	Building
BLK.	Blocking
BM.	Beam
BN.	Bullnose
BOT.	Bottom
CAB.	Cabinet
CEM.	Cement
CER.	Ceramic
C.G.	Cover Guard
C.I.	Cast Iron
C.J.	Ceiling Joists
CLG.	Ceiling
CLR.	Clear
C.M.U.	Cement Masonry Unit
C.O.	Clean Out
COL.	Column
CONC.	Concrete
CONN.	Connection
CONST.	Construction
CONT.	Continuous
CORR.	Corridor
COUNT.	Counter
CFM.	Cubic Feet Per Minute
C.T.	Collar Tie
DRY.	Dryer
DBL.	Double
DEPT.	Department
DET.	Detail
D.F.	Douglas Fir
D.N.	Down
DR.	Door
D.S.	Down Spout
DIF.	Diffuser
DWR.	Drawer
E.	East
EA.	Each
E.J.	Expansion Joint
EL.	Elevation
ELECT.	Electrical
ELEV.	Elevator
EMER.	Emergency
ENCL.	Enclosure
E.O.S.	Edge of Surface
EQ.	Equal
E.P.	Electrical Panel
EST.	Estimate
EXEC.	Excavate
EXT.	Extinguisher
F.A.	Fire Alarm
FAB.	Fabricate
F.A.U.	Forced Air Unit
F.O.C.	Face of Curb
F.D.	Floor Drain
FDN.	Foundation
F.E.	Fire Extinguisher
F.F.	Finish Floor
F.G.	Floor Girder
F.H.C.	Fire Hose Cabinet
F.O.F.	Face of Finish
F.O.S.	Face of Stud.
FP.	Fireplace
FTG.	Footing
FURN.	Furring
FURR.	Furnace
FIX.	Fixture
GA.	Galvanized
G.B.	Grab Bar
G.D.	Garbage Disposal
GL.	Glass
GLB.	Glue Laminated Timber
G.S.M.	Galvanized Sheet Metal
GYP. BD.	Gypsum Board
H.B.	Hose Bib
H.C.	Hollow Core
HD.	Head
HDR. BD.	Header Board
H.C.	Handicapped
HORIZ.	Horizontal
HGT.	Height
HTR.	Heater
HRD. WD.	Hard Wood
I.D.	Inside Diameter
INSUL.	Insulation
INT.	Interior
INV.	Invert
J.N.	Joist Number
JST.	Joist
LAV.	Lavatory
LOCK.	Locker
L.P.S.	Low Pressure Sodium
LT.	Light
M.B.	Machine Bolt
M.C.	Medicine Cabinet
MECH.	Mechanical
MED.	Medium
MEMB.	Membrane
M.H.	Manhole or Metal Halide
MIR.	Mirror
MISC.	Miscellaneous
MEZZ.	Mezzanine
MFR.	Manufacturer
M.O.	Masonry Opening
M.V.	Mercury Vapor
N.	North
N.I.C.	Not In Contract
NO.	Number
NORM.	Normal
N.T.S.	Not To Scale
O/	Over
OA.	Overall
OBS.	Obscure
O.C.	On Center
O.D.	Outside Diameter
OFF.	Office
OH.	Overhead
P.D.	Power Driven
PEN.	Plywood Edge Nailing
PERF.	Perforated
PL.	Property Line
PLAS.	Plasma Screen
P. LAM.	Plastic Laminate
PLAS.	Plaster
PLY.WD.	Plywood
PRE.FAB.	Prefabricated
PROJ.	Project
PROP.	Property
PROJ.	Projection
PT.	Point
P.T.D.	Paper Towel Dispenser
PR.	Pair
PRECAST.	Pre-cast
P.T.	Pressure Treated
PTN.	Partition
Q.T.	Quarry Tile
QTR.	Quarter
R.	Radius
R.B.	Roof Beam
R.C.	Reinforced Concrete
R.D.	Roof Drain
REF.	Reference
REFR.	Refrigerator
RESIL.	Resilient
RM.	Room
R.O.	Rough Opening
RD.WD.	Redwood
S.	South
S.C.	Solid Core
S.C.D.	Seat Cover Dispenser
SCHED	Schedule
S.D.	Soap Dispenser
SDG.	Siding
SECT.	Section
SHT.	Sheet
SIM.	Similar
SQ.	Square
S.SINK	Service Sink
S.S.	Stainless Steel
STA.	Station
STD.	Standard
STL.	Steel
STRUCT.	Structural
SURF.	Surface
SYM.	Symbol
SYS.	System
T.&B.	Top And Bottom
T.&G.	Tongue And Groove
T.	Tread
T.B.	Towel Bar
T.P.H.	Toilet Paper Holder
T.P.D.	Toilet Paper Dispenser
TEL.	Telephone
THRU.	Through
T.O.C.	Top of Curb
T.O.P.	Top of Pavement
T.O.W.	Top of Wall
T.V.	Television
TYP.	Typical
U.L.	Underwriters Laboratories
U.O.N.	Unless Otherwise Noted
URN.	Urinal
VERT.	Vertical
V.G.	Vertical Grain
V.P.	Vent Pipe
W.	West
W.C.	Water Closet
W.H.	Wood
W.S.	Weather-stripping
W.W.F.	Welded Wire Fabric
YD.	Yard

DESCRIPTION OF WORK

The scope of the work under this building application shall be to construct a new two story home with basement on the current vacant lot located at 181 Alvarado Avenue in the City of Los Altos. This work shall include but not necessarily limited to the following:

1. Removal of the existing utility shed structure and 3'-0" high fence
2. Execute all work as required to construct the proposed new residence including the implementation of all site and grading improvements necessary for its full construction
3. Make all necessary utility connections including water and sewer
4. Implement general landscaping and irrigation improvements that included installing all required shrube, trees, ground covering as required by the City Planning Department before issuance of final occupancy permit.

VICINITY MAP

PROJECT SITE

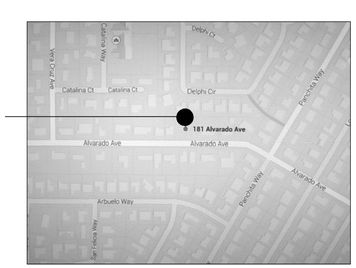

PROJECT SUMMARY TABLE

ZONING COMPLIANCE

	Existing	Proposed	Allowed/Required
LOT COVERAGE: *Land area covered by all structures that are over 6 feet in height*	_____ Square Feet (_%)	3,777 Square Feet (20 _%)	5,753 Square Feet (30 _%)
FLOOR AREA: *Measured to the outside surfaces of the exterior walls*	1st Flr: _sq.ft. 2nd Flr: _sq.ft. Total: _sq.ft. (_%)	1st Flr: 3,607 _sq.ft. 2nd Flr: 1,022 _sq.ft. Total: 4,629 _sq.ft. (24.1 _%)	1st Flr: _sq.ft. 2nd Flr: _sq.ft. Total: 4,668 sq.ft. (24.3 _%)
SETBACKS:			
Front	_ _feet	25 _feet	_ 25 _feet
Rear	_ _feet	± 60.66feet	_ 25 _feet
Right side (1st / 2nd)	_ _feet / _feet	± 18.33feet / ±38.4feet	_ 10 _feet / 17.5 _feet
Left side (1st / 2nd)	_ _feet / _feet	10 _feet / ±56.3feet	_ 10 _feet / 17.5 _feet
HEIGHT:	_ _feet	27 _feet	_ 27 _feet

SQUARE FOOTAGE BREAKDOWN

	Existing	Change In	Total Proposed
HABITABLE LIVING AREA: *Includes habitable basement areas*	_____ Square Feet	_____ Square Feet	5,300 Square Feet
NON-HABITABLE LIVING AREA: *Does not include covered porches or open structures*	_____ Square Feet	_____ Square Feet	1,597 Square Feet

LOT CALCULATIONS

NET LOT AREA:	19,177 Square Feet
FRONT YARD HARDSCAPE AREA: *Hardscape area in front yard setback shall not exceed 50%*	±1,543 Square Feet (26 %)
LANDSCAPE BREAKDOWN:	Total hardscape area: (existing and proposed) ±6,317 Square Feet Total softscape area: (undisturbed) ±12,860 Square Feet New softscape area: 0 Square Feet *Sum of all three to equal site net lot area*

** MAXIMUM FLOOR AREA ALLOWED = 19,177 SF. - 11,000 = 8,177 x 0.10 = 817 + 3,850 = 4,668*

M. SANDOVAL ARCHITECTS INC.

145 Corte Madera Town Center #404
Corte Madera, California 94925

San Francisco, Marin and North Bay Region
Phone: 415.924.7059
Fax: 415.924.7269
Peninsula and South Bay Region
Phone: 650.941.8048
Fax: 650.941.8069

msa@msandovalarchitects.com
www.msandovalarchitects.com

PROJECT:

New Residence for

BOBBY & FLORENCE LIAO

181 Alvarado Avenue
Los Altos, California

LICENSED ARCHITECT
MARK S. SANDOVAL
No.C23926
Ren. 6-30-17
STATE OF CALIFORNIA

REVISIONS:
1
2
3
4
5
6
7
8

SHEET DESCRIPTION:

GENERAL NOTES PROJECT TEAM, DESCRIPTION OF WORK, INDEX TO DRAWINGS, SYMBOLS & ABBREVIATIONS, VICINITY MAP

N0. 1411-01

6/30/15 — DATE:
AS NOTED — SCALE:

DRAWN BY:
CHECK BY:

SHEET NUMBER:

A0.1

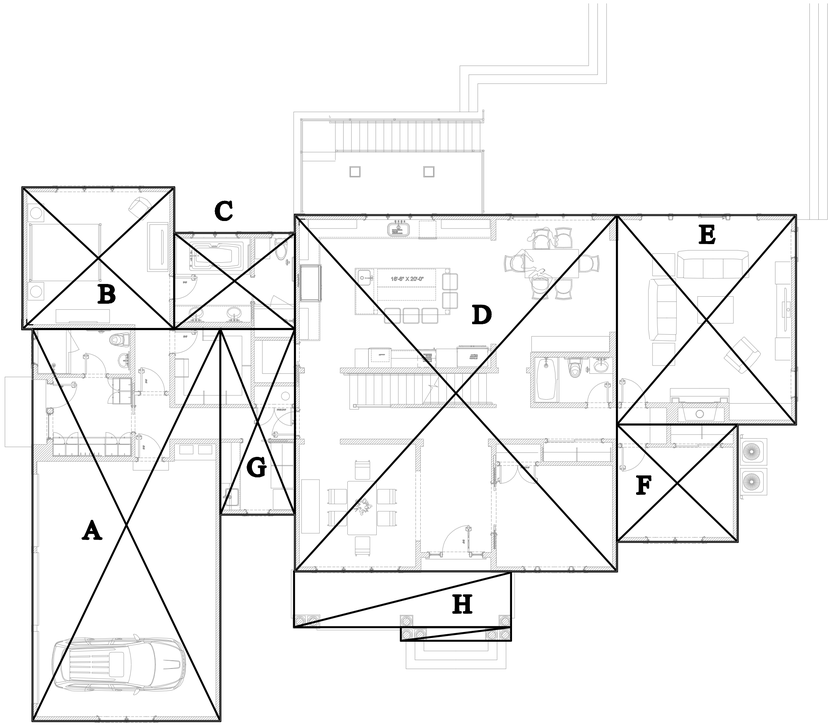

FIRST FLOOR AREA DIAGRAM

1/8" SCALE

1
A0.2

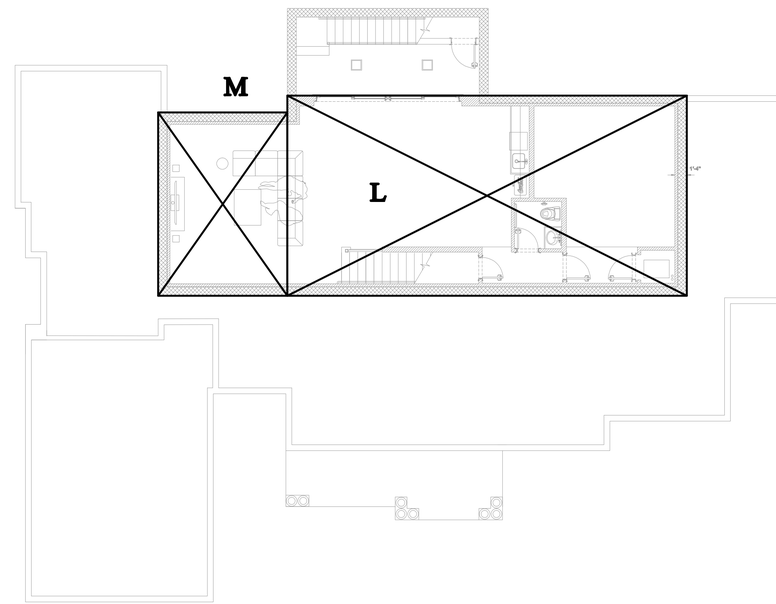

BASEMENT FLOOR AREA DIAGRAM (EXCLUDED)

1/8" SCALE

3
A0.2

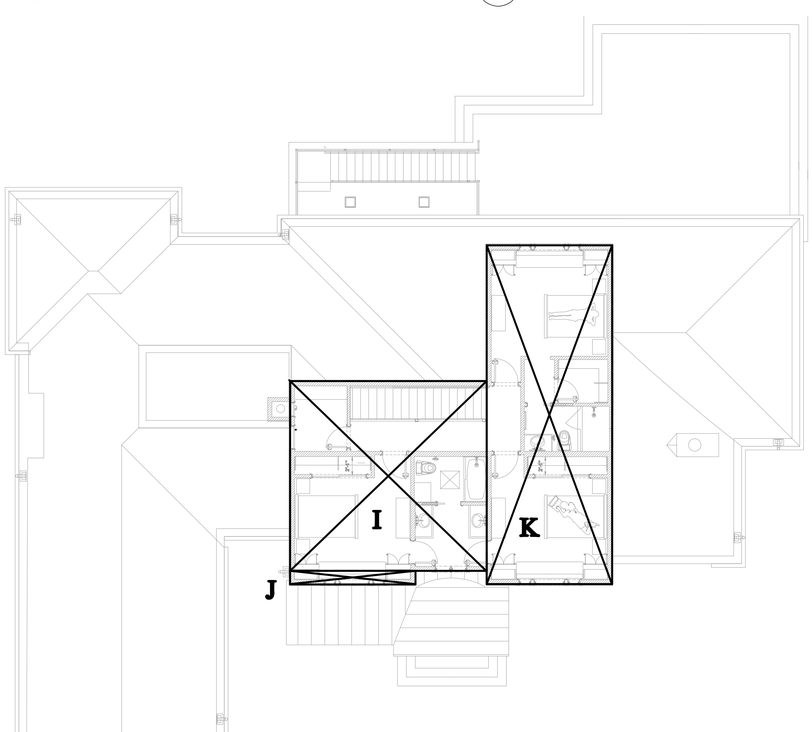

SECOND FLOOR AREA DIAGRAM

1/8" SCALE

2
A0.2

TABULATIONS

FIRST FLOOR

A: 21'-0 x 43'-10" = 919.8 SF.
B: 17'-0" x 15'-10" = 268.6 SF.
C: 13'-6" x 15'-10" = 145.12 SF.
D: 36'-6" x 39'-10" = 1.452.7 SF.
E: 20'-0" x 23'-6" = 470 SF.
F: 13'-6" x 13'-2" = 177.66 SF.
G: 8'-4" x20'-6" = 172.84 SF.

PORCH (EXCLUDED FROM F.A.R.)

H: 24'-3" x 6'-3" + 12'-4" x 1'-6" = 170.05 SF.

SECOND FLOOR

I: 22'-1" x 21'-3" = 467.5 SF.
J: 14'-0" x 1'-6" = 21 SF.
K: 14'-0" X 38'-0" = 532 SF.

BASEMENT (EXCLUDED FROM F.A.R.

L: 44'-8" x 22'-4" = 997.25 SF.
M: 14'-5" x 20'-6" = 295.4 SF.

TOTAL AREA

FIRST FLOOR: 3,607 SF.

SECOND FLOOR: 1,022 SF.

PROPOSED FLOOR AREA = 4,629 SF. < 4,668 SF.

M. SANDOVAL ARCHITECTS INC.

145 Corte Madera Town Center #404
Corte Madera, California 94925

San Francisco, Marin and North Bay Region
Phone: 415.924.7059
Fax: 415.924.7269
Peninsula and South Bay Region
Phone: 650.941.8048
Fax: 650.941.8069

mse@msandovalarchitects.com
www.msandovalarchitects.com

PROJECT:

New Residence for

BOBBY & FLORENCE LIAO

181 Alvarado Avenue
Los Altos, California

LICENSED ARCHITECT
MARK S. SANDOVAL
No.C23926
Ren. 6-30-17
STATE OF CALIFORNIA

REVISIONS:
1
2
3
4
5
6
7
8

SHEET DESCRIPTION:

FLOOR AREA DIAGRAMS

N0. 1411-01

6/30/15 — DATE:
AS NOTED — SCALE:

DRAWN BY:
CHECK BY:

SHEET NUMBER:

A0.2

DESIGN REVIEW NOT FOR CONSTRUCTION

159 Alvarado Avenue | 165 Alvarado Avenue | 181 Alvarado Avenue | 195 Alvarado Avenue | 215 Alvarado Avenue

NEIGHBORING PROPERTIES ON EITHER SIDE OF THE STREET INCLUDING SUBJECT PROPERTY

GOGGLE MAP OF NEIGHBORHOOD

SCALE = 1" = 40'-0"

204 Alvarado Avenue | 188 Alvarado Avenue | 190 Alvarado Avenue | 168 Alvarado Avenue | 158 Alvarado Avenue

NEIGHBORING PROPERTIES ACROSS THE STREET

236 Delphi Circle | 240 Delphi Circle | 242 Delphi Circle

NEIGHBORING PROPERTIES AT THE REAR OF THE SUBJECT PROPERTY

M. SANDOVAL ARCHITECTS INC.

145 Corte Madera Town Center #404
Corte Madera, California 94925

San Francisco, Marin and North Bay Region
Phone: 415.924.7059
Fax: 415.924.7269
Peninsula and South Bay Region
Phone: 650.941.8048
Fax: 650.941.8069

mse@msandovalarchitects.com
www.msandovalarchitects.com

PROJECT:

New Residence for

BOBBY & FLORENCE LIAO

181 Alvarado Avenue
Los Altos, California

LICENSED ARCHITECT
MARK S. SANDOVAL
No.C23926
Ren. 6-30-17
STATE OF CALIFORNIA

REVISIONS:
1
2
3
4
5
6
7
8

SHEET DESCRIPTION:

NEIGHBORHOOD CONTEXT MAP

N0. 1411-01

6/30/15	AS NOTED
DATE:	SCALE:
DRAWN BY:	CHECK BY:

SHEET NUMBER:

A0.3

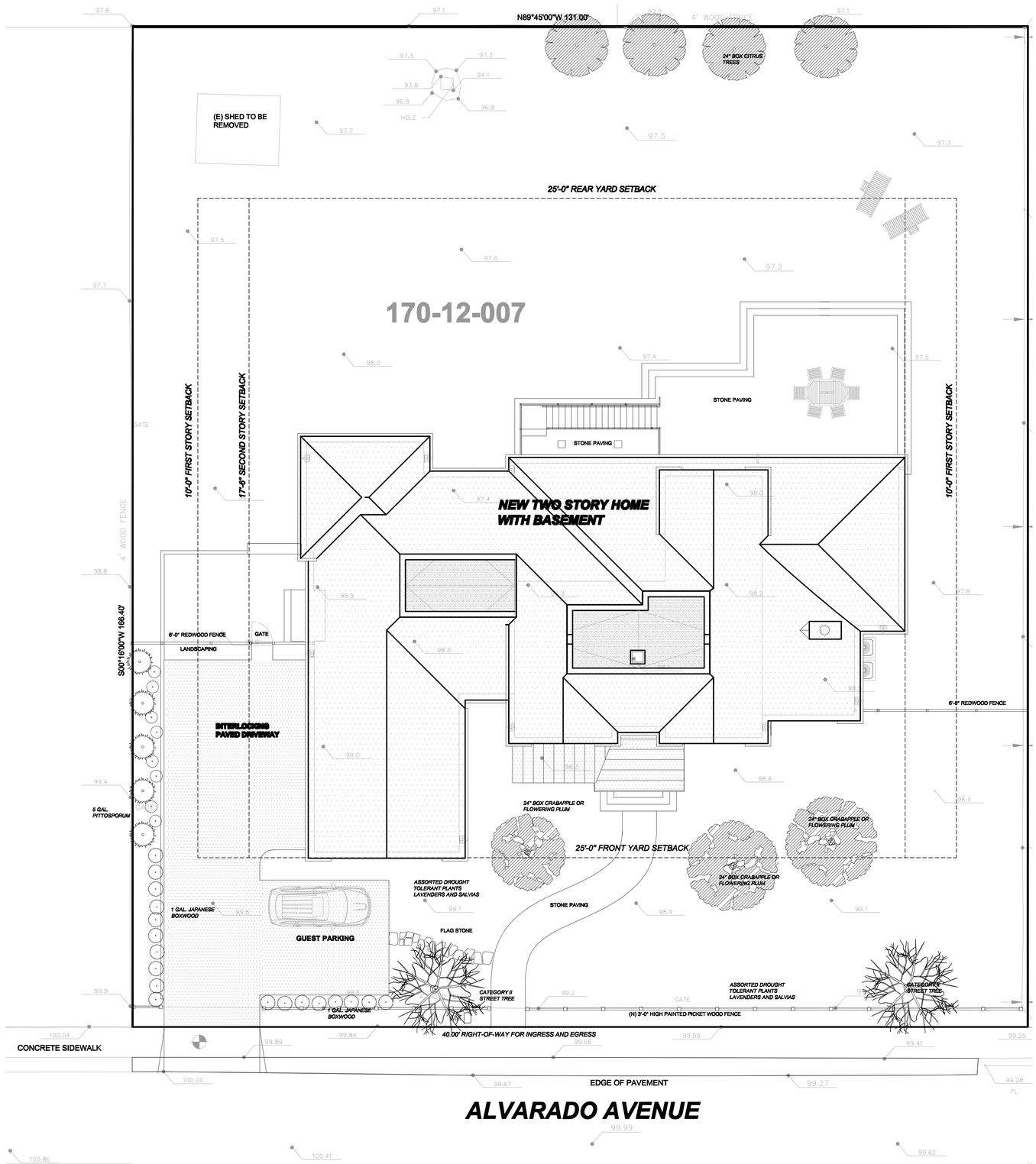

SITE PLAN

1/8" SCALE

1
A1.1

SHEET NOTES

GENERAL NOTES

SITE WORK

1. The Contractor shall ensure that positive drainage away from foundations and other building structures is provided with a fall of not less than 6 inches in the first 10 feet (2% minimum slope). If obstructions or lot lines prohibit the 10' horizontal distance, provide alternative method of diverting water as approved by the Architect or the Project's Civil Engineer. If swales are to be used, all swales shall have a minimum of 2% if within 10' of foundation.

2. It shall be the responsibility of the Contractor to promptly notify this office of any discrepancies, or conflicts with the drawings and the specifications, in relationship to the existing conditions encountered at the job site before proceeding with the work.

3. The Contractor agrees that he shall assume sole and complete responsibility for the job site conditions during the course construction of the project including, safety of all persons and property; that this requirement shall apply continuously and not be limited to normal working hour; at that the contractor shall defend, indemnify, and hold the owner and m. sandoval architects, inc., harmless from any and all liability, real or alleged, in connection with the performance of work on this project, except for liability arising from the sole negligence of the Owner or Architect.

4. M. SANDOVAL ARCHITECTS, INC. assumes no responsibility beyond the adequacy of their design contained herein.

VENTILATION OF ATTIC AND CRAWL SPACE

1. All exterior openings into attic or rafter spaces are covered with corrosion-resistant wire cloth screening, hardware cloth, perforated vinyl or similar material with openings having a least dimension larger than 1/4 inch maximum. Ventilation openings shall have a least dimension of 1/16 inch minimum and 1/4 inch maximum. Ventilation openings having a least dimension larger than 1/4 inch shall be provided with corrosion-resistant wire cloth screening, hardware cloth, or similar material with openings having a least dimension of 1/16 inch (1.6 mm) minimum and 1/4 inch (6.4 mm) maximum.

2. Openings in roof framing members shall conform to the requirements of Section R802. 7 and maintain the following:

3. Ensure that at least 1" airspace between insulation and roof sheathing on detail of insulated rafter space is maintained during the insulation of attic space.

4. Crawlspace ventilation shall conform to requirements set by CRC §408.1.

5. Gravity flow ventilation as indicated shall have a net cross-ventilation area equivalent to 1/150 of area ventilated and shall be located within 3 feet of each corner of the building as required by CRC §R408.2.

6. All ventilation openings shall be covered with corrosion-resistant wire mesh with openings not exceeding ¼" or specify any of the other materials listed under §R408.2.

7. Provide access to unoccupied attics and crawlspaces per CRC §R408.4 & R807.

8. Provide in locations shown in the drawings the following:

   Crawl Space Access: Provide 18" x 24" (minimum) crawlspace access and ensure that all separate crawlspaces are accessible.

   Attic Access: Provide 20" x 30" (minimum) attic access to all attic areas with 30" or more clear height.

9. Provide attic draft stops so that no horizontal attic area exceeds 1,000 sf. per CRC §R302.12.

DESIGN REVIEW NOT FOR CONSTRUCTION

M. SANDOVAL ARCHITECTS INC.

145 Corte Madera Town Center #404
Corte Madera, California 94925

San Francisco, Marin and North Bay Region
Phone: 415.924.7059
Fax: 415.924.7259
Peninsula and South Bay Region
Phone: 650.941.8048
Fax: 650.941.8069

mse@msandovalarchitects.com
www.msandovalarchitects.com

PROJECT:

New Residence for

BOBBY & FLORENCE LIAO

181 Alvarado Avenue
Los Altos, California

LICENSED ARCHITECT
MARK S. SANDOVAL
No.C23926
Ren. 6-30-17
STATE OF CALIFORNIA

REVISIONS:
1
2
3
4
5
6
7
8

SHEET DESCRIPTION:

SITE PLAN

N0. 1411-01

6/30/15	AS NOTED
DATE:	SCALE:
DRAWN BY:	CHECK BY:

SHEET NUMBER:

A1.1

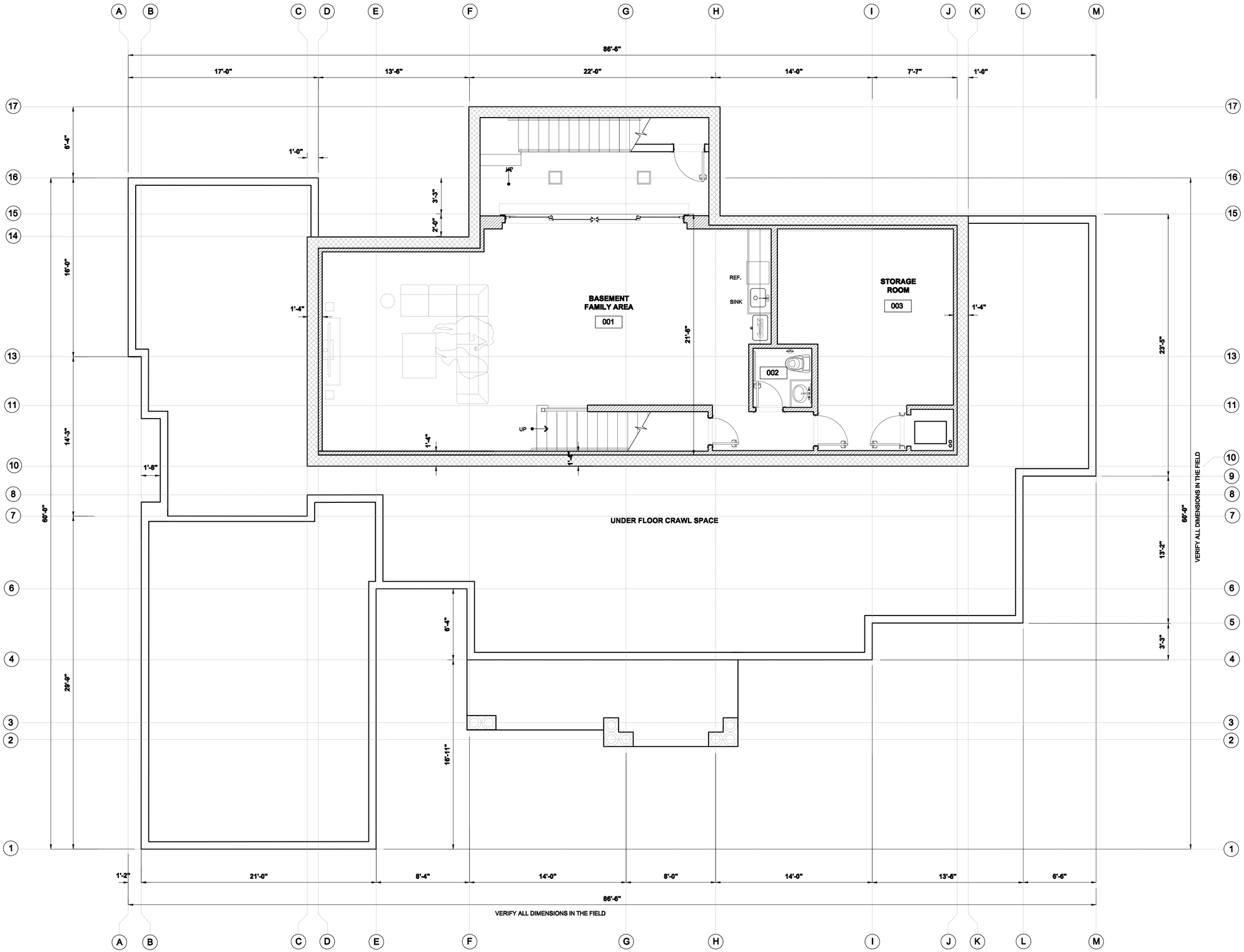

DESIGN REVIEW NOT FOR CONSTRUCTION

M. SANDOVAL ARCHITECTS INC.

145 Corte Madera Town Center #404
Corte Madera, California 94925

San Francisco, Marin and North Bay Region
Phone: 415.924.7059
Fax: 415.924.7269
Peninsula and South Bay Region
Phone: 650.941.8048
Fax: 650.941.8069

mse@msandovalarchitects.com
www.msandovalarchitects.com

PROJECT:

New Residence for

BOBBY & FLORENCE LIAO

181 Alvarado Avenue
Los Altos, California

LICENSED ARCHITECT
MARK S. SANDOVAL
No.C23926
Ren. 6-30-17
STATE OF CALIFORNIA

REVISIONS:
1
2
3
4
5
6
7
8

SHEET DESCRIPTION:

BASEMENT FLOOR PLAN

N0. 1411-01

6/30/15	1/4" = 1'-0"
DATE:	SCALE:
DRAWN BY:	CHECK BY:

SHEET NUMBER:

A2.1

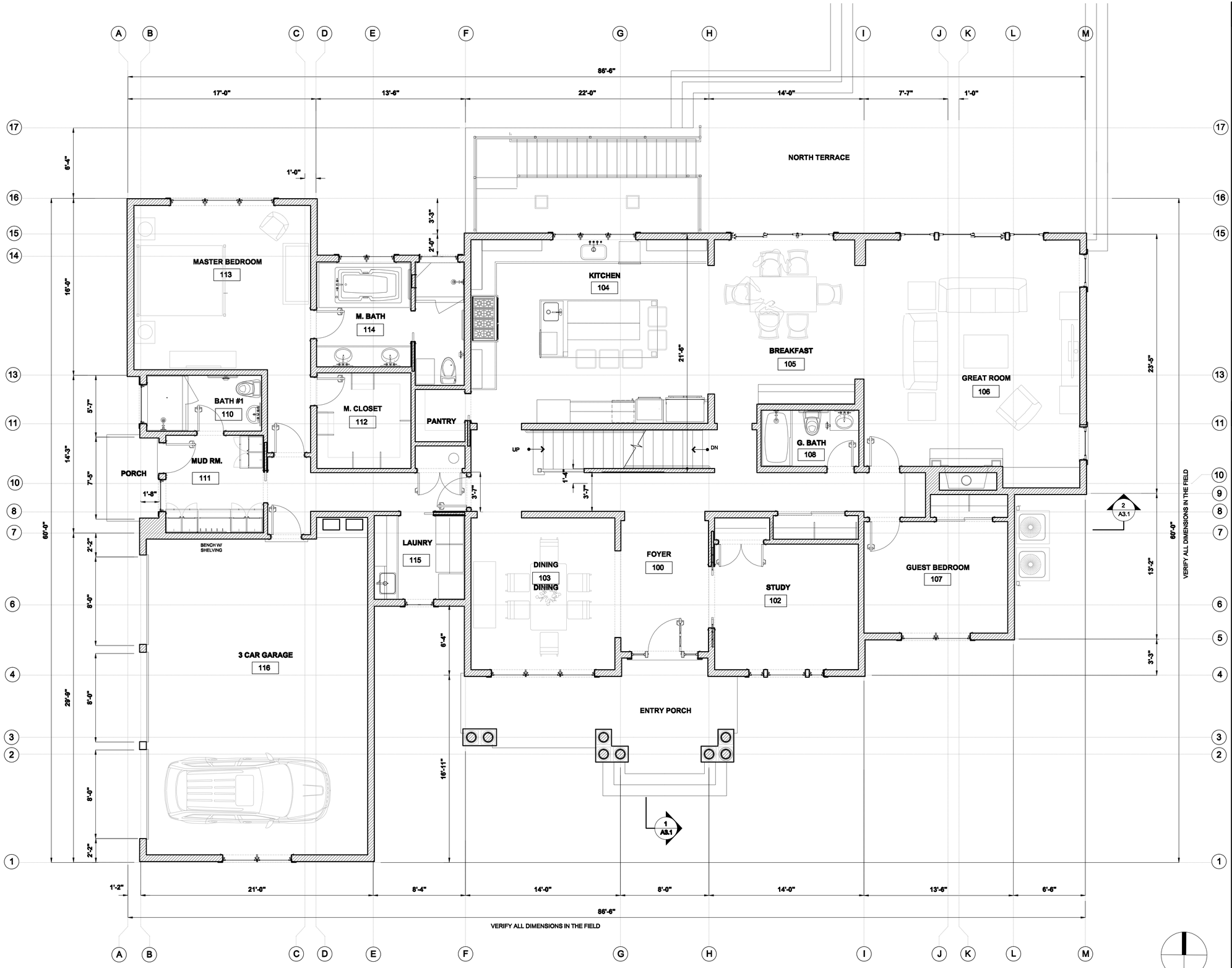

SHEET NOTES

GENERAL NOTES

DESIGN REVIEW NOT FOR CONSTRUCTION

M. SANDOVAL ARCHITECTS INC.

145 Corte Madera Town Center #404
Corte Madera, California 94925

San Francisco, Marin and North Bay Region
Phone: 415.924.7059
Fax: 415.924.7269
Peninsula and South Bay Region
Phone: 650.941.8048
Fax: 650.941.8069

mse@msandovalarchitects.com
www.msandovalarchitects.com

PROJECT:

New Residence for

BOBBY & FLORENCE LIAO

181 Alvarado Avenue
Los Altos, California

LICENSED ARCHITECT
MARK S. SANDOVAL
No.C23926
Ren. 6-30-17
STATE OF CALIFORNIA

REVISIONS:
1
2
3
4
5
6
7
8

SHEET DESCRIPTION:

FIRST FLOOR PLAN

N0. 1411-01

DATE:	SCALE:
6/30/15	1/4" = 1'-0"

DRAWN BY: CHECK BY:

SHEET NUMBER:

A2.2

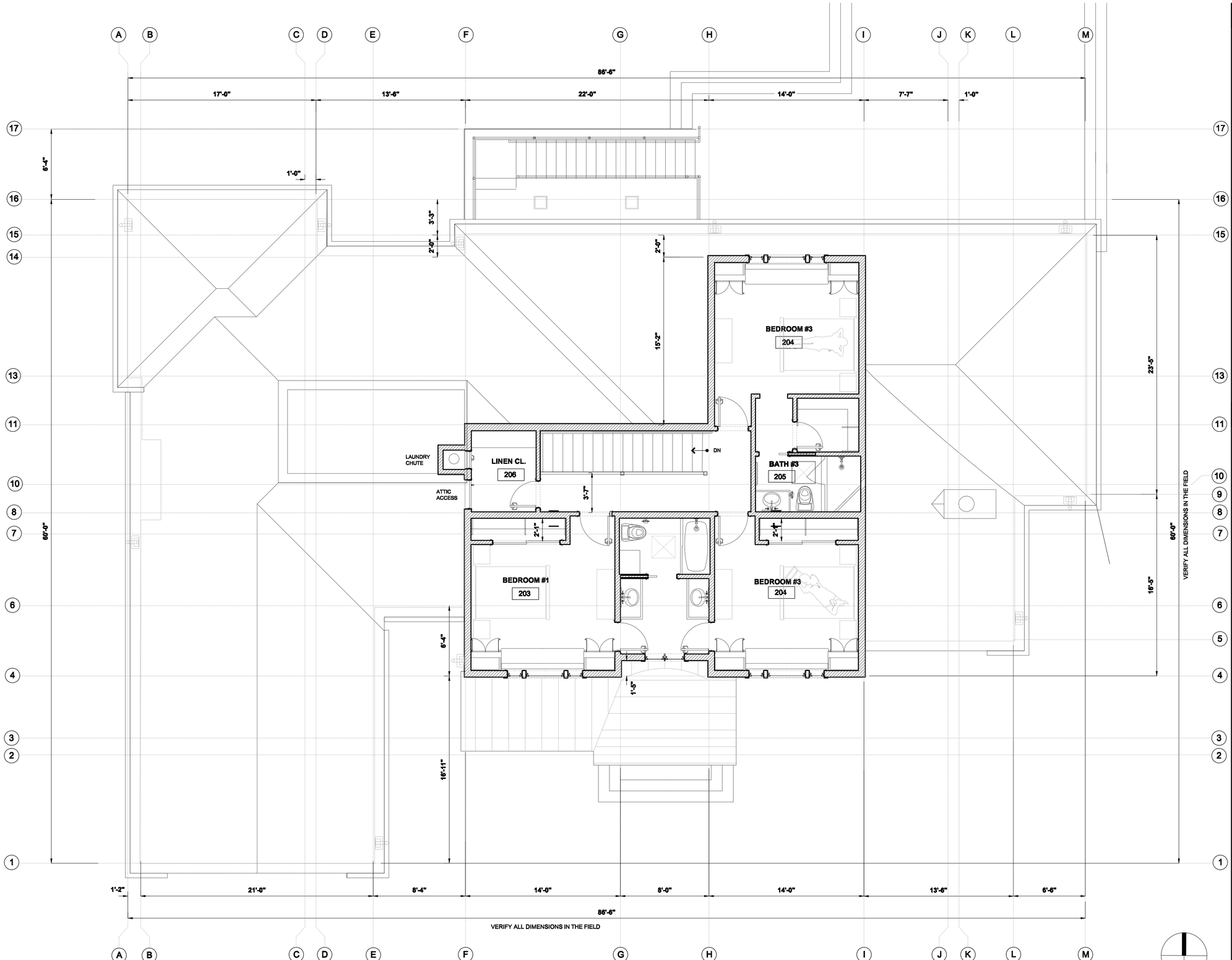

SHEET NOTES

GENERAL NOTES

DESIGN REVIEW NOT FOR CONSTRUCTION

M. SANDOVAL ARCHITECTS INC.

145 Corte Madera Town Center #404
Corte Madera, California 94925

San Francisco, Marin and North Bay Region
Phone: 415.924.7059
Fax: 415.924.7269
Peninsula and South Bay Region
Phone: 650.941.8048
Fax: 650.941.8069

mse@msandovalarchitects.com
www.msandovalarchitects.com

PROJECT:

New Residence for

BOBBY & FLORENCE LIAO

181 Alvarado Avenue
Los Altos, California

LICENSED ARCHITECT
MARK S. SANDOVAL
No.C23926
Ren. 6-30-17
STATE OF CALIFORNIA

REVISIONS:

1
2
3
4
5
6
7
8

SHEET DESCRIPTION:

SECOND FLOOR PLAN

N0. 1411-01

6/30/15	1/4" = 1'-0"
DATE:	SCALE:
DRAWN BY:	CHECK BY:

SHEET NUMBER:

A2.3

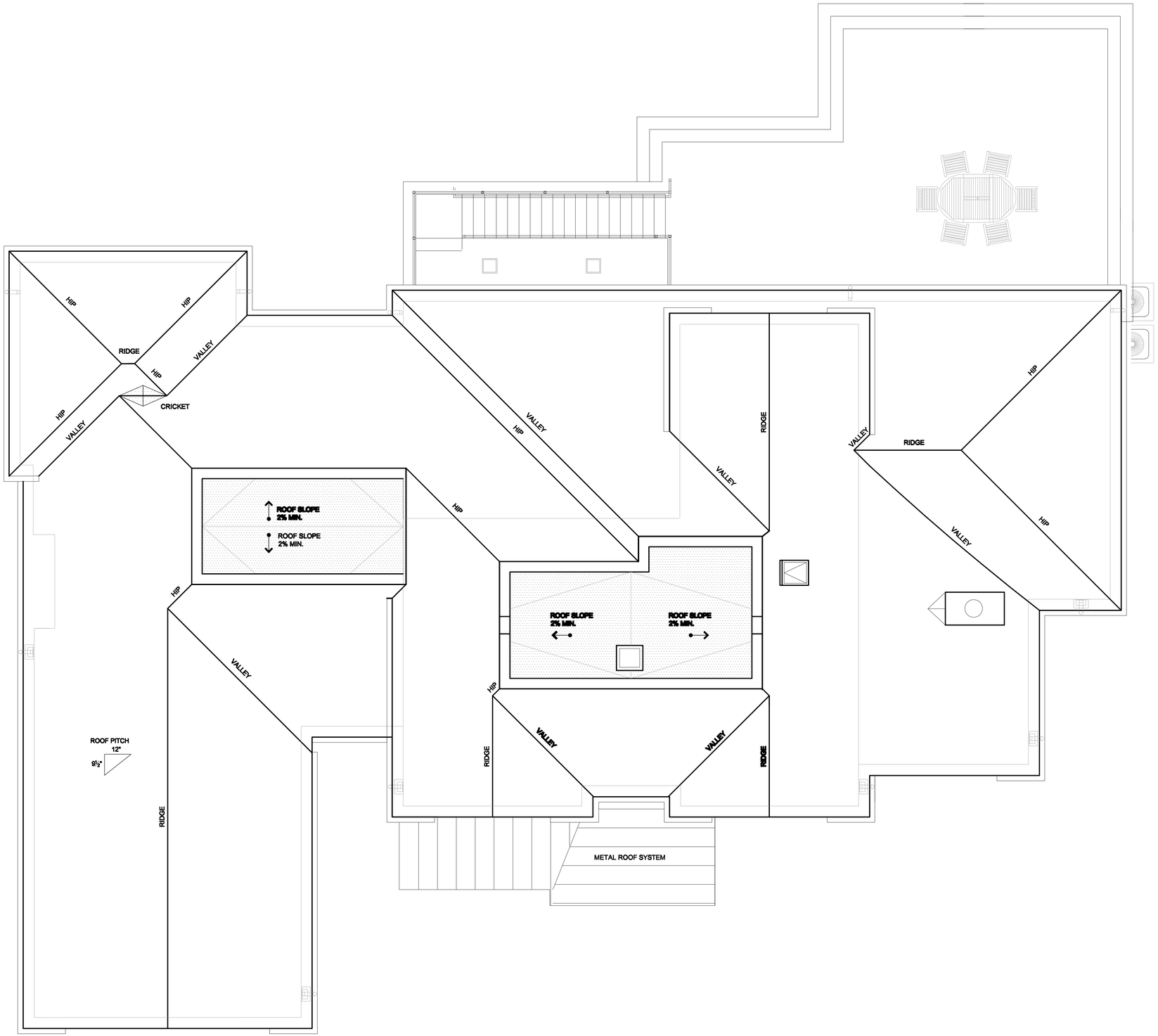

SHEET NOTES

GENERAL NOTES

DESIGN REVIEW NOT FOR CONSTRUCTION

M. SANDOVAL ARCHITECTS INC.

145 Corte Madera Town Center #404
Corte Madera, California 94925

San Francisco, Marin and North Bay Region
Phone: 415.924.7059
Fax: 415.924.7269
Peninsula and South Bay Region
Phone: 650.941.8048
Fax: 650.941.8069

mse@msandovalarchitects.com
www.msandovalarchitects.com

PROJECT:

New Residence for

BOBBY & FLORENCE LIAO

181 Alvarado Avenue
Los Altos, California

LICENSED ARCHITECT
MARK S. SANDOVAL
No.C23926
Ren. 6-30-17
STATE OF CALIFORNIA

REVISIONS:
1
2
3
4
5
6
7
8

SHEET DESCRIPTION:

ROOF PLAN

N0. 1411-01

6/30/15	1/4" = 1'-0"
DATE:	SCALE:
DRAWN BY:	CHECK BY:

SHEET NUMBER:

A2.4

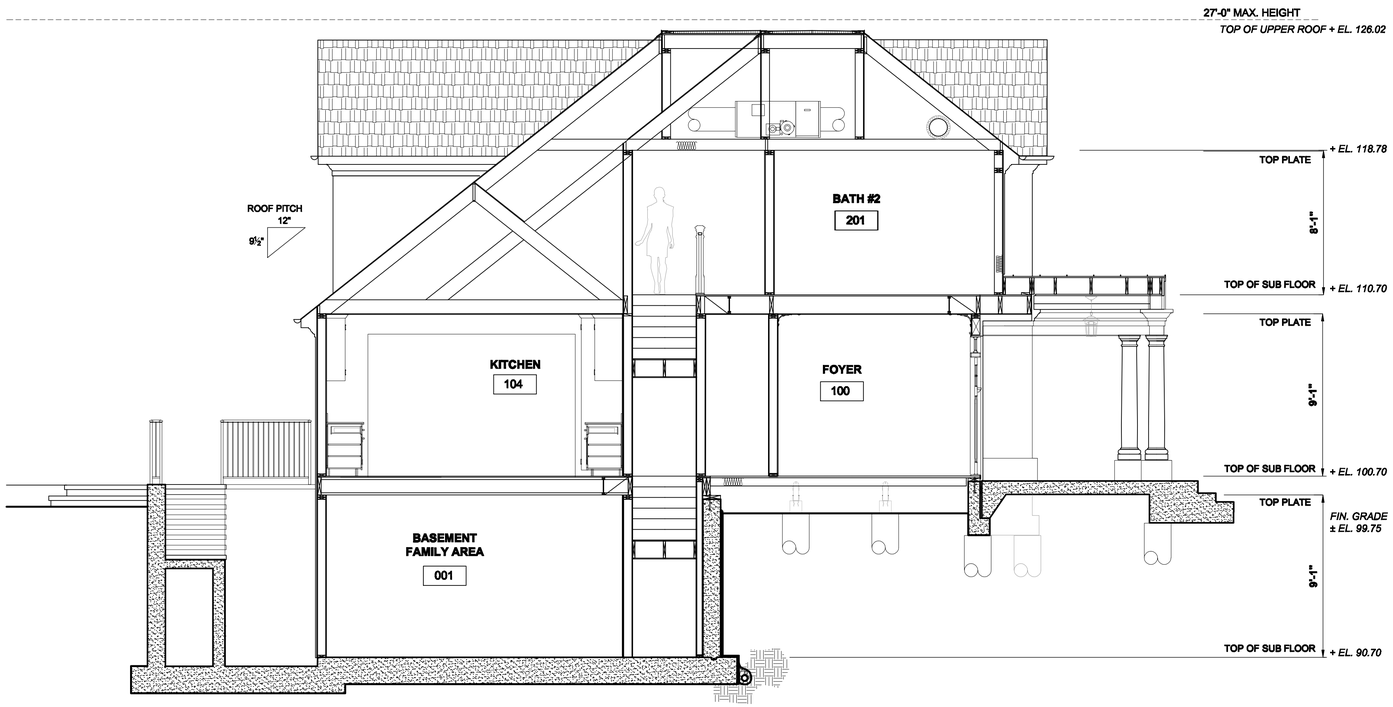

BUILDING SECTION

1/4" SCALE

1
A3.1

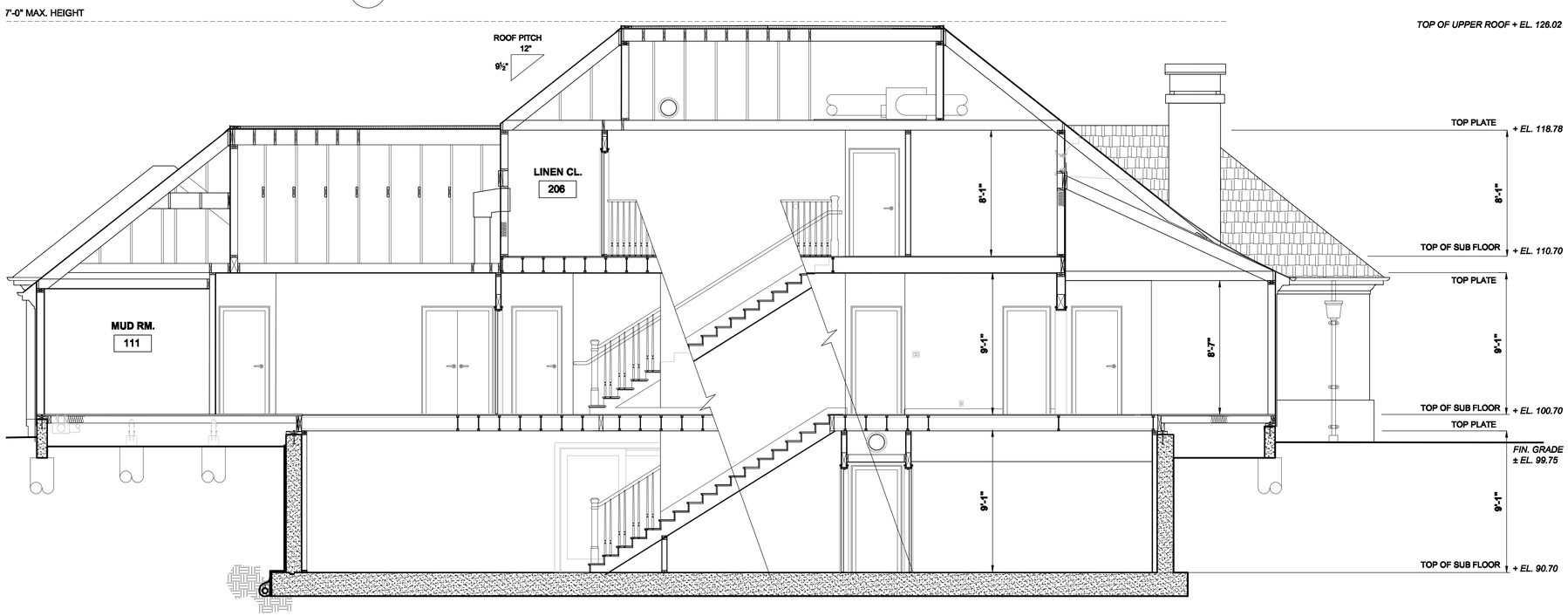

BUILDING SECTION

1/4" SCALE

2
A3.1

SHEET NOTES

GENERAL NOTES

DESIGN REVIEW NOT FOR CONSTRUCTION

M. SANDOVAL ARCHITECTS INC.

145 Corte Madera Town Center #404
Corte Madera, California 94925

San Francisco, Marin and North Bay Region
Phone: 415.924.7059
Fax: 415.924.7269
Peninsula and South Bay Region
Phone: 650.941.8048
Fax: 650.941.8069

mse@msandovalarchitects.com
www.msandovalarchitects.com

PROJECT:

New Residence for

BOBBY & FLORENCE LIAO

181 Alvarado Avenue
Los Altos, California

LICENSED ARCHITECT
MARK S. SANDOVAL
No.C23926
Ren. 6-30-17
STATE OF CALIFORNIA

REVISIONS:

1
2
3
4
5
6
7
8

SHEET DESCRIPTION:

BUILDING SECTIONS

N0. 1411-01

6/30/15	AS NOTED
DATE:	SCALE:
DRAWN BY:	CHECK BY:

SHEET NUMBER:

A3.1

NORTH EXTERIOR ELEVATION

1/4" SCALE

1 A3.2

EAST EXTERIOR ELEVATION

1/4" SCALE

2 A3.2

SHEET NOTES

1. Indicates existing grade
2. Indicates new finish grade
3. Concrete retaining wall with applied stucco finish to match visual characteristics of main structure walls; provide waterproofing system behind wall with subsurface perforated drain pipe. See structural drawings for details and for steel reinforcing requirements.
4. Indicates stone paved walks and/or terraces
5. Interlocking paved driveway
6. Indicates foundation ventilation, provide a minimum of 1 square foot for every 150 square feet of under floor space
7. Indicates sand finish stucco over self-furring wire lath over 2 layers of grade "d" building paper, over plywood
8. Indicates 2x vertical and horizontal wood window trim
9. Wood constructed cornice with continuous plancher see architectural drawings for details
10. Indicates decorative steel fabricated guard rail at 42" minimum height w/ vertical pickets spaced 4" o.c.
11. Indicates metal half round gutter with downspout and decorative fabricated leader head
12. Indicates composition shingle roof system over waterproof membrane, over cdx plywood deck
13. Metal standing seam roof over water proofing membrane
14. Indicates Tuscan style wood column set on stone plinth stone veneer base
15. Decorative arched front entry with painted bead board ceiling
16. Indicates flat roof to slope transition metal flashing
17. Indicates 4 ply membrane roof system with applied gravel; ensure proper lapping of felt layers and over drip edges; slope roof at a minimum of 2% towards metal stops for unimpeded positive drainage
18. Indicates clad wood double hung window refer to window schedule for requirements (manufacturer to be determined by the owner)
19. Indicates clad wood patio French sliding door refer to window schedule for requirements
20. Indicates operable skylight (Velux or equal quality manufacturer)
21. Line indicates basement stairs
22. Indicates manufactured gas appliance fireplace w/ spark arrester; fireplace shall not be for the burning of solid fuel.
23. Indicates custom fabricated fireplace chimney wind shroud
24. Indicates decorative belly band horizontal trim
25. Indicates approximate location of shielded wall mounted light fixture controlled by a motion remote sensor with integral photo control
26. Indicates stone terrace

DESIGN REVIEW NOT FOR CONSTRUCTION

M. SANDOVAL ARCHITECTS INC.

145 Corte Madera Town Center #404
Corte Madera, California 94925

San Francisco, Marin and North Bay Region
Phone: 415.924.7059
Fax: 415.924.7269
Peninsula and South Bay Region
Phone: 650.941.8048
Fax: 650.941.8069

mas@msandovalarchitects.com
www.msandovalarchitects.com

PROJECT:

New Residence for

BOBBY & FLORENCE LIAO

181 Alvarado Avenue
Los Altos, California

LICENSED ARCHITECT
MARK S. SANDOVAL
No.C23926
Ren. 6-30-17
STATE OF CALIFORNIA

REVISIONS:
1
2
3
4
5
6
7
8

SHEET DESCRIPTION:

EXTERIOR ELEVATIONS

N0. 1411-01

6/30/15	AS NOTED
DATE:	SCALE:
DRAWN BY:	CHECK BY:

SHEET NUMBER:

A3.2

SOUTH EXTERIOR ELEVATION

1/4" SCALE

1 A3.3

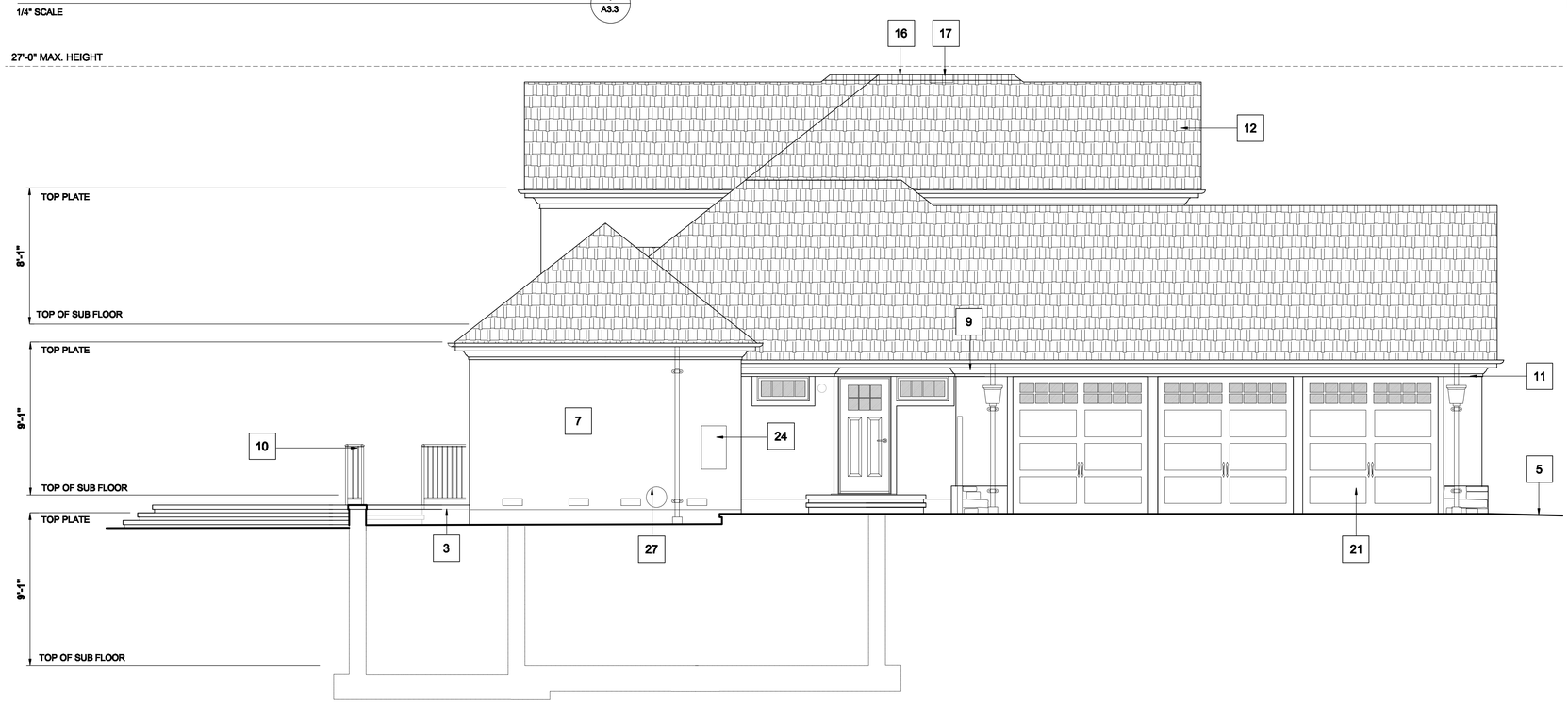

WEST EXTERIOR ELEVATION

1/4" SCALE

2 A3.3

SHEET NOTES

1. Indicates existing grade
2. Indicates new finish grade
3. Concrete retaining wall with applied stucco finish to match visual characteristics of main structure walls; provide waterproofing system behind wall with subsurface perforated drain pipe. See structural drawings for details and for steel reinforcing requirements.
4. Indicates stone paved walks and/or terraces
5. Interlocking paved driveway
6. Indicates foundation ventilation, provide a minimum of 1 square foot for every 150 square feet of under floor space
7. Indicates sand finish stucco over self-furring wire lath over 2 layers of grade "d" building paper, over plywood
8. Indicates 2x vertical and horizontal wood window trim
9. Wood constructed cornice with continuous plancher see architectural drawings for details
10. Indicates decorative steel fabricated guard rail at 42" minimum height with vertical pickets 4" o.c.
11. Indicates metal half round gutter with downspout and decorative fabricated leader head
12. Indicates composition shingle roof system over waterproof membrane, over cdx plywood deck
13. Metal standing seam roof over water proofing membrane
14. Indicates Tuscan style wood column set on stone plinth stone veneer base
15. Decorative arched front entry with painted bead board ceiling
16. Indicates flat roof to slope transition metal flashing
17. Indicates 4 ply membrane roof system with applied gravel; ensure proper lapping of felt layers and over drip edges; slope roof at a minimum of 2% towards metal slope for unimpeded positive drainage
18. Indicates clad wood double hung window refer to window schedule for requirements (manufacturer to be determined by the owner)
19. Indicates paint grade wood door
20. Indicates custom paint grade wood entry door with sidelights and upper transom to be selected by the owner
21. Wood roll-up garage doors to be selected by the Owner
22. Indicates manufactured gas appliance fireplace w/ spark arrester; fireplace shall not be for the burning of solid fuel.
23. Indicates custom fabricated fireplace chimney wind shroud
24. Location of main electrical panel
25. Indicates approximate location of shielded wall mounted light fixture controlled by a motion remote sensor with integral photo control
26. Address numbers, 4" minimum height w/ 0.5" minimum stroke on contrasting back ground
27. Approximate location of gas meter
28. Fixed wood louver attic vent

DESIGN REVIEW NOT FOR CONSTRUCTION

M. SANDOVAL ARCHITECTS INC.

145 Corte Madera Town Center #404
Corte Madera, California 94925

San Francisco, Marin and North Bay Region
Phone: 415.924.7059
Fax: 415.924.7269
Peninsula and South Bay Region
Phone: 650.941.8048
Fax: 650.941.8069

mse@msandovalarchitects.com
www.msandovalarchitects.com

PROJECT:

New Residence for

BOBBY & FLORENCE LIAO

181 Alvarado Avenue
Los Altos, California

LICENSED ARCHITECT
MARK S. SANDOVAL
No.C23926
Ren. 6-30-17
STATE OF CALIFORNIA

REVISIONS:
1
2
3
4
5
6
7
8

SHEET DESCRIPTION:

EXTERIOR ELEVATIONS

N0. 1411-01

6/30/15	AS NOTED
DATE:	SCALE:
DRAWN BY:	CHECK BY:

SHEET NUMBER:

A3.3

LIAO RESIDENCE
181 ALVARADO AVENUE
LOS ALTOS, CA 94022

LEGEND

EXISTING	PROPOSED	DESCRIPTION
		BOUNDARY
		PROPERTY LINE
		RETAINING WALL
		LANDSCAPE RETAINING WALL
	RW RW	RAINWATER TIGHTLINE
	SUB	SUBDRAIN LINE
	TL	TIGHTLINE
SD	SD	STORM DRAIN LINE
SS	SS	SANITARY SEWER LINE
W	W	WATER LINE
G	G	GAS LINE
P	P	PRESSURE LINE
JT	JT	JOINT TRENCH
		SET BACK LINE
		CONCRETE VALLEY GUTTER
		EARTHEN SWALE
CB	CB	CATCH BASIN
JB	JB	JUNCTION BOX
AD	AD	AREA DRAIN
		CURB INLET
SDMH	SDMH	STORM DRAIN MANHOLE
		FIRE HYDRANT
SSMH	SSMH	SANITARY SEWER MANHOLE
		STREET SIGN
222.57 INV	222.57 INV	SPOT ELEVATION
		FLOW DIRECTION
	D	DEMOLISH/REMOVE
		BENCHMARK
200	200	CONTOURS
	XX" TREE	TREE TO BE REMOVED

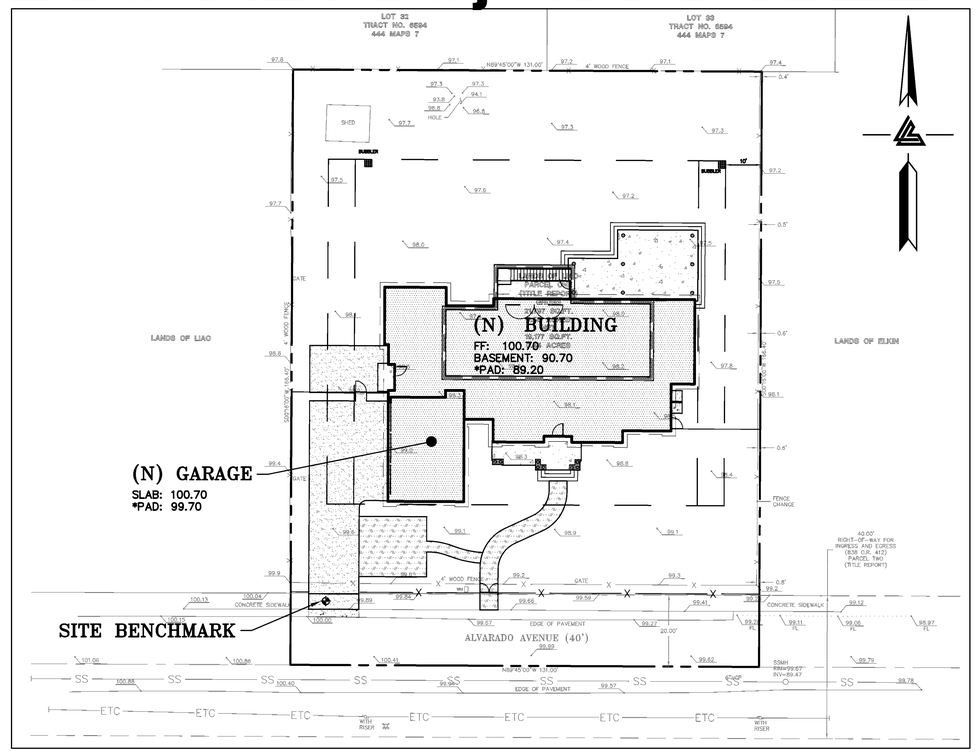

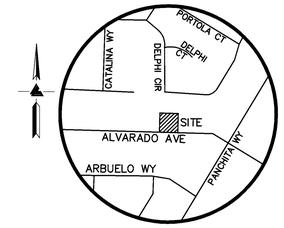

VICINITY MAP
NO SCALE

OWNER'S INFORMATION

OWNER:
BOBBY & FLORENCE LIAO
181 ALVARADO AVENUE
LOS ALTOS, CA 94022

APN: 170-12-004

REFERENCES

THIS GRADING AND DRAINAGE PLAN IS SUPPLEMENTAL TO:

1. TOPOGRAPHIC SURVEY BY LEA & BRAZE, INC. ENTITLED;
   "TOPOGRAPHIC SURVEY"
   181 ALVARADO AVENUE
   LOS ALTOS, CA 94022
   DATE: 11-26-14
   JOB# 2141067
2. SITE PLAN BY M. SANDOVAL ARCHITECTS, INC. ENTITLED:
   "NEW RESIDENCE"
   181 ALVARADO AVENUE
   LOS ALTOS, CA 94022
   DATE: 3-9-15
   JOB# 1411-01
3. SOIL REPORT BY GEOFORNENSICS, INC. ENTITLED:
   "GEOTECHNICAL INVESTIGATION"
   181 ALVARADO AVENUE
   LOS ALTOS, CA 94022
   DATE: 3-10-15
   JOB# 215013

THE CONTRACTOR SHALL REFER TO THE ABOVE NOTED SURVEY AND PLAN, AND SHALL VERIFY BOTH EXISTING AND PROPOSED ITEMS ACCORDING TO THEM.

ABBREVIATIONS

AB	AGGREGATE BASE	LF	LINEAR FEET
AC	ASPHALT CONCRETE	MAX	MAXIMUM
ACC	ACCESSIBLE	MH	MANHOLE
AD	AREA DRAIN	MIN	MINIMUM
BC	BEGINNING OF CURVE	MON.	MONUMENT
B & D	BEARING & DISTANCE	(N)	NEW
BM	BENCHMARK	NO.	NUMBER
BW/FG	BOTTOM OF WALL/FINISH GRADE	NTS	NOT TO SCALE
CB	CATCH BASIN	O.C.	ON CENTER
C & G	CURB AND GUTTER	O/	OVER
℄	CENTER LINE	(PA)	PLANTING AREA
CPP	CORRUGATED PLASTIC PIPE (SMOOTH INTERIOR)	PED	PEDESTRIAN
CO	CLEANOUT	PIV	POST INDICATOR VALVE
COTG	CLEANOUT TO GRADE	PSS	PUBLIC SERVICES EASEMENT
CONC	CONCRETE	PL	PROPERTY LINE
CONST	CONSTRUCT or -TION	PP	POWER POLE
CONC COR	CONCRETE CORNER	PUE	PUBLIC UTILITY EASEMENT
CY	CUBIC YARD	PVC	POLYVINYL CHLORIDE
D	DIAMETER	R	RADIUS
DI	DROP INLET	RCP	REINFORCED CONCRETE PIPE
DIP	DUCTILE IRON PIPE	RIM	RIM ELEVATION
EA	EACH	RW	RAINWATER
EC	END OF CURVE	R/W	RIGHT OF WAY
EG	EXISTING GRADE	S	SLOPE
EL	ELEVATIONS	S.A.D.	SEE ARCHITECTURAL DRAWINGS
EP	EDGE OF PAVEMENT	SAN	SANITARY
EQ	EQUIPMENT	SD	STORM DRAIN
EW	EACH WAY	SDMH	STORM DRAIN MANHOLE
(E)	EXISTING	SHT	SHEET
FC	FACE OF CURB	S.L.D.	SEE LANDSCAPE DRAWINGS
FF	FINISHED FLOOR	SPEC	SPECIFICATION
FG	FINISHED GRADE	SS	SANITARY SEWER
FH	FIRE HYDRANT	SSCO	SANITARY SEWER CLEANOUT
FL	FLOW LINE	SSMH	SANITARY SEWER MANHOLE
FS	FINISHED SURFACE	ST.	STREET
G	GAS	STA	STATION
GA	GAGE OR GAUGE	STD	STANDARD
GB	GRADE BREAK	STRUCT	STRUCTURAL
HDPE	HIGH DENSITY CORRUGATED POLYETHYLENE PIPE	T	TELEPHONE
HORIZ	HORIZONTAL	TC	TOP OF CURB
HI PT	HIGH POINT	TEMP	TEMPORARY
H&T	HUB & TACK	TP	TOP OF PAVEMENT
ID	INSIDE DIAMETER	TW/FG	TOP OF WALL/FINISH GRADE
INV	INVERT ELEVATION	TYP	TYPICAL
JB	JUNCTION BOX	VC	VERTICAL CURVE
JT	JOINT TRENCH	VCP	VITRIFIED CLAY PIPE
JP	JOINT UTILITY POLE	VERT	VERTICAL
L	LENGTH	W/	WITH
LNDG	LANDING	W, WL	WATER LINE
		WM	WATER METER
		WWF	WELDED WIRE FABRIC

RETAINING WALL NOTES

1. TW/FG REPRESENTS FINISHED EARTHEN GRADE OR PAVEMENT ELEVATION AT TOP OF WALL, NOT ACTUAL TOP OF WALL MATERIAL. BW/FG REPRESENTS FINISH EARTHEN GRADE OR PAVEMENT ELEVATION AT BOTTOM OF WALL NOT INCLUDING FILL FOUNDATION. GRADES INDICATED ON THESE PLANS REFER TO THE FINISHED GRADES ADJACENT TO THE RETAINING WALL, NOT INCLUDING FOOTING, FREEBOARD, ETC.
2. DIMENSIONS SHOWN IN BRACKETS SHOWN AS [X.X'] DENOTE THE EFFECTIVE WALL HEIGHT ONLY. THE ACTUAL WALL HEIGHT AND DEPTH MAY DIFFER DUE TO CONSTRUCTION REQUIREMENTS.
3. REFER TO SPECIFIC WALL CONSTRUCTION DETAIL FOR STRUCTURAL ELEMENTS, FREEBOARD, AND EMBEDMENT.
4. REFER TO ARCHITECTURAL, LANDSCAPE ARCHITECTURE, AND/OR STRUCTURAL PLANS FOR DETAILS, WALL ELEVATIONS, SUBDRAINAGE, WATERPROOFING, FINISHES, COLORS, STEEL REINFORCING, MATERIALS, ETC. PROVIDE CLIPS OR OTHER MEANS OF SECURING FINISH MATERIALS AS NECESSARY (WET SET INTO THE WALL).
5. ALL RETAINING WALLS SHOULD HAVE A BACK-OF-WALL SUB-SURFACE DRAINAGE SYSTEM INCLUDING WEEPHOLES TO PREVENT HYDROSTATIC PRESSURE.
6. SEE DETAIL SHEET FOR SPECIFIC INFORMATION.
7. PROVIDE GUARDRAIL (WHERE APPLICABLE AND DESIGNED BY OTHERS) AS REQUIRED FOR GRADE SEPARATION OF 30 INCHES OR MORE MEASURED 5' HORIZONTALLY FROM FACE OF WALL, PER CBC.

KEY MAP

1" = 20'

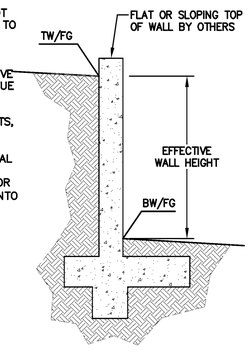

ESTIMATED EARTHWORK QUANTITIES

CUBIC YARDS	WITHIN BUILDING FOOTPRINT	OUTSIDE BUILDING FOOTPRINT	TOTAL CUBIC YARDS
CUT	0	0	0
FILL	0	0	0
EXPORT / IMPORT			0

NOTE:
GRADING QUANTITIES REPRESENT BANK YARDAGE. IT DOES NOT INCLUDE ANY SWELLING OR SHRINKAGE FACTORS AND IS INTENDED TO REPRESENT IN-SITU CONDITIONS. QUANTITIES DO NOT INCLUDE OVER-EXCAVATION, TRENCHING, STRUCTURAL FOUNDATIONS OR PIERS, OR POOL EXCAVATION (IF ANY). NOTE ADDITIONAL EARTHWORKS, SUCH AS KEYWAYS OR BENCHING MAY BE REQUIRED BY THE GEOTECHNICAL ENGINEER IN THE FIELD AT TIME OF CONSTRUCTION. CONTRACTOR TO VERIFY QUANTITIES.

NOTES

ALL DISTANCES AND DIMENSIONS ARE IN FEET AND DECIMALS OF A FOOT.

UNDERGROUND UTILITY LOCATION IS BASED ON SURFACE EVIDENCE.

BUILDING FOOTPRINTS ARE SHOWN AT GROUND LEVEL.

EASEMENT NOTE

EASEMENTS SHOWN ARE PER TITLE REPORT PREPARED BY FIRST AMERICAN TITLE COMPANY, ORDER 4316-3746411, DATED FEBRUARY 28, 2013.

SITE BENCHMARK

SURVEY CONTROL POINT
CUT CROSS IN CONCRETE
ELEVATION = 100.00' (ASSUMED)

* BUILDING PAD NOTE:
ADJUST PAD LEVEL AS REQUIRED. REFER TO STRUCTURAL PLANS FOR SLAB SECTION OR CRAWL SPACE DEPTH TO ESTABLISH PAD LEVEL.

NOTE:
FOR CONSTRUCTION STAKING SCHEDULING OR QUOTATIONS PLEASE CONTACT GREG BRAZE AT LEA & BRAZE ENGINEERING (510)887-4086 EXT 103.
gbraze@leabraze.com

1-800-227-2600 CALL BEFORE YOU DIG — USA — UNDERGROUND SERVICE ALERT

SHEET INDEX

C-1.0	TITLE SHEET
C-2.0	GRADING & DRAINAGE PLAN
C-3.0	GRADING SPECIFICATIONS
C-4.0	DETAILS
ER-1	EROSION CONTROL
ER-2	EROSION CONTROL DETAILS
ER-3	BLUEPRINT FOR A CLEAN BAY

REGISTERED PROFESSIONAL ENGINEER — PETER CARLINO — No. C79555 — CIVIL — STATE OF CALIFORNIA — ORIGINAL SIGNATURES IN BLUE INK

LEA & BRAZE ENGINEERING, INC.
CIVIL ENGINEERS • LAND SURVEYORS
BAY AREA REGION
2495 INDUSTRIAL PKWY WEST
HAYWARD, CALIFORNIA 94545
(P) (510) 887-4086
(F) (510) 887-3019
SACRAMENTO REGION
3017 DOUGLAS BLVD. # 300
ROSEVILLE, CA 95661
(P) (916)366-1338
(F) (916)797-7363
WWW.LEABRAZE.COM

LIAO RESIDENCE
181 ALVARADO AVENUE
LOS ALTOS, CALIFORNIA
SANTA CLARA COUNTY
APN: 167-29-058

TITLE SHEET

REVISIONS	BY
–	–
–	–
–	–
–	–
–	–

JOB NO:	2150310
DATE:	XX-XX-XX
SCALE:	AS NOTED
DESIGN BY:	RB
DRAWN BY:	WA
SHEET NO:	C-1.0

01 OF 07 SHEETS

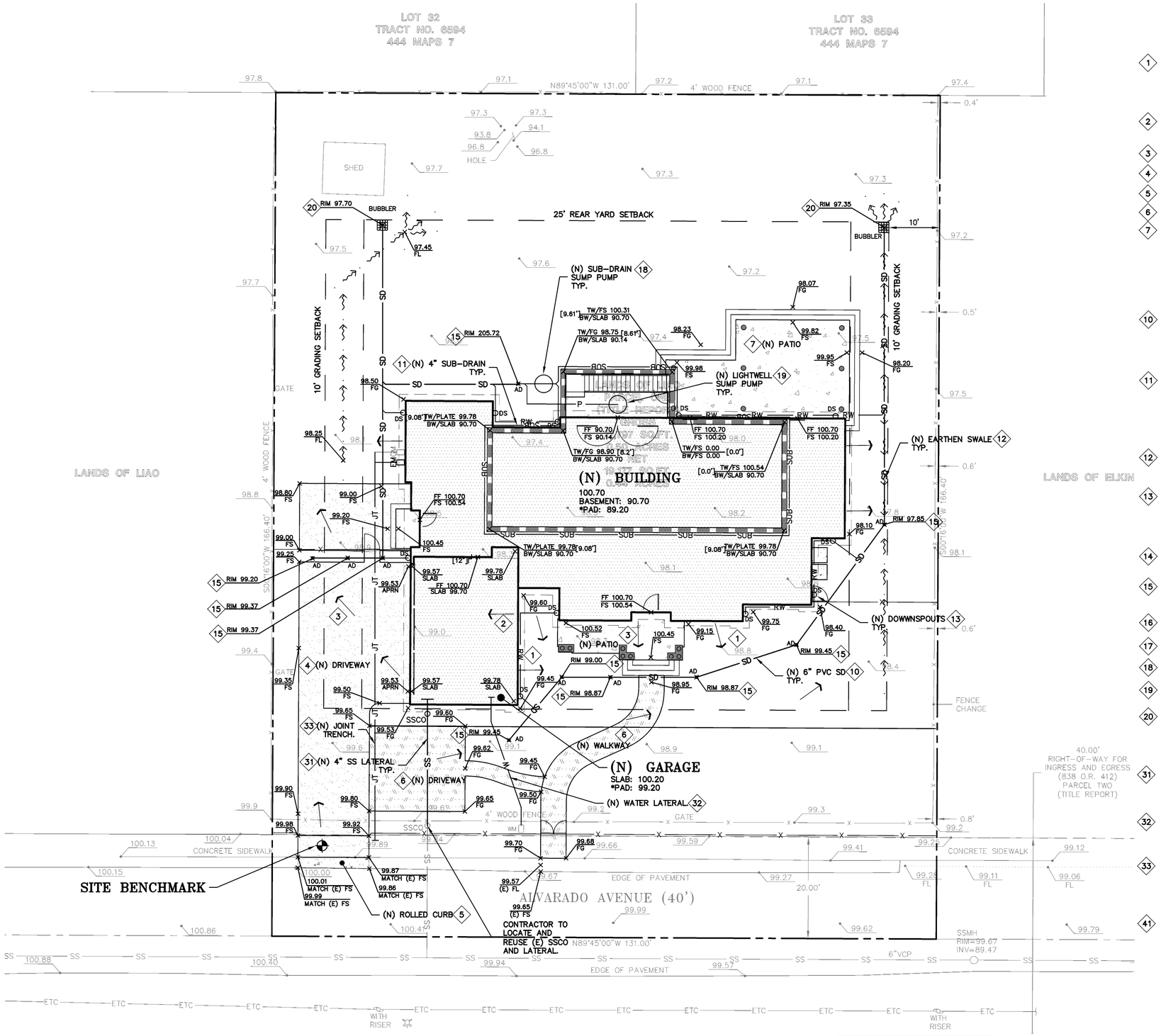

FLATWORK KEYNOTES 1 TO 7

1. FINISHED GRADES AT BUILDING PERIMETER SHALL BE SLOPED AT A MINIMUM OF 5% FOR THE FIRST 10' AWAY FROM THE BUILDING PER CBC 1804.3 OR TO AN APPROVED DRAINAGE SWALE OR STRUCTURE. GRADES SHALL CONTINUE TO SLOPE TOWARDS POSITIVE DRAINAGE AND A POSITIVE OUTFALL. MAINTAIN 8" CLEARANCE BETWEEN FINISH EARTHEN GRADE AND BOTTOM OF MUD SILL AT ALL TIMES PER CBC 2304.11.2 UNLESS STRUCTURAL DETAILING ALLOWS LESS. REFER TO STRUCTURAL PLANS FOR FOUNDATION DESIGN AND DETAILS.
2. SLOPE GARAGE SLAB 1% MINIMUM (1/8" PER FOOT) FROM BACK TO FRONT TO ALLOW FOR ADEQUATE DRAINAGE. MAINTAIN 1/2" TO 1" LIP BETWEEN GARAGE SLAB AND DRIVEWAY. SEE PLANS FOR SPECIFIC DROP
3. PROVIDE 2% (1% MIN.) SLOPE ACROSS FLAT WORK AND/OR PAVING PER CBC 2304.11.2. SLOPE TOWARDS POSITIVE DRAINAGE AS SHOWN ON PLAN.
4. (N) AC DRIVEWAY. SEE DETAIL 1 SHEET C-4.0.
5. (N) CONCRETE GUTTER. SEE DETAIL 10 SHEET C-4.0.
6. (N) DECOMPOSED GRANITE . SEE DETAIL 11 SHEET C-4.0.
7. (N) CONCRETE PATIOS/WALKWAYS. SEE DETAIL 7 SHEET C-4.0.

0 5 10 20

SCALE: 1" = 10'

STORM DRAIN KEYNOTES 10 TO 20

10. INSTALL (N) ON-SITE STORM DRAIN SYSTEM. USE MINIMUM 6" PVC (SDR 35) OR HDPE (ADS N-12 W/ SMOOTH INTERIOR WALLS). MAINTAIN 24" MINIMUM COVER AND SLOPED AT 1% MINIMUM AT ALL TIMES UNLESS OTHERWISE NOTED. PROVIDE CLEAN OUT TO GRADE AT MAJOR CHANGES IN DIRECTION. AVOID USING 90° BENDS AND INSTEAD USE (2) 45° BENDS AND WYE CONNECTIONS.
11. INSTALL (N) SUBDRAIN. USE PERFORATED 4" PVC (SDR-35) WITH HOLES DOWN AND SLOPED AT 1% MINIMUM SURROUND WITH 3/4" DRAIN ROCK WRAPPED IN FILTER FABRIC (MIRAFI 140N). MIRADRAIN OR OTHER LEA & BRAZE PREAPPROVED DRAINAGE SYSTEM MAY ALSO BE USED. AVOID USING 90° BENDS AND INSTEAD USE (2) 45° BENDS AND WYE CONNECTIONS. PROVIDE CLEANOUT TO GRADE AT MAJOR CHANGES IN DIRECTION AND AT 100' MAXIMUM INTERVALS. SUBDRAIN SHALL REMAIN A DEDICATED SEPARATE SYSTEM UNTIL IT CONNECTS TO STORM DRAIN SYSTEM OR OUTFALL AS SHOWN. SEE DETAIL X ON C-X.
12. CONSTRUCT (N) EARTHEN SWALE SLOPED AT 1% MINIMUM TOWARDS POSITIVE OUTFALL. SEE DETAIL 6 ON SHEET C-4.0.
13. CONNECT RAIN WATER DOWNSPOUTS TO 4" PVC (SDR-35) TIGHTLINE, SLOPED AT 1% MINIMUM. DIRECT TO NEAREST STORM DRAIN LINE. PROVIDE CLEAN OUT TO GRADE AT MAJOR CHANGES IN DIRECTION. AVOID USING 90° BENDS AND INSTEAD USE (2) 45° BENDS. TIGHTLINE MAY BE PLACED IN COMMON TRENCH WITH SUBDRAIN LINES, HOWEVER, NOT CONNECT TO SUBDRAIN LINES. CONNECT TO NEAREST STORM DRAIN LINE AS SHOWN ON PLAN.
14. DIRECT DOWNSPOUTS TO 24" LONG PRECAST CONCRETE SPLASHBLOCKS OR OTHER HARD SURFACE. DIRECT AWAY FROM ANY STRUCTURE AND TOWARDS POSITIVE DRAINAGE.
15. INSTALL (N) 4" DIAMETER BRASS AREA DRAIN (AD) IN HARDSCAPE AREAS OR BRASS ATRIUM GRATE (NDS PART 70C) IN LANDSCAPE OR PLANTER AREAS DO NOT USE PLASTIC GRATES. SEE DETAIL 2 SHEET C-4.0.
16. INSTALL (N) CRAWL SPACE AREA DRAINS AND PROVIDE 2" MINIMUM CONCRETE RAT SLAB. SEE DETAIL X ON SHEET C-X.
17. INSTALL (N) LIGHTWELL OVERFLOW DRAIN. SEE DETAIL 9 ON SHEET C-4.0.
18. INSTALL (N) SUMP PUMP FOR SUBDRAIN SYSTEM. SEE DETAIL 5 ON SHEET C-4.0.
19. INSTALL (N) SUMP PUMP FOR LIGHTWELL DRAINAGE. SEE DETAIL 4 ON SHEET C-4.0.
20. INSTALL (N) BUBBLER PER DETAIL X SHEET C-4.0.

UTILITIES KEYNOTES 31 TO X

31. INSTALL (N) SANITARY SEWER LATERALS. USE 4" PVC (SDR-26) SLOPED AT 2% MINIMUM. CONNECT TO (E) SEWER MAIN AS SHOWN. PROVIDE CLEANOUT TO GRADE AT BUILDING AND BEHIND PROPERTY LINE AND AT MAJOR CHANGES IN DIRECTION AS SHOWN. REUSE (E) LATERAL IF POSSIBLE. CONNECT PER DISTRICT STANDARDS.
32. CONNECT (N) WATER SERVICE PER WATER DISTRICT STANDARDS. UPGRADE (E) WATER METER PER WATER DISTRICT STANDARDS AS APPLICABLE. INSTALL (N) 2" MINIMUM SERVICE LINE TO (N) RESIDENCE OR AS DIRECTED BY FIRE SPRINKLER DESIGNER.
33. INSTALL (N) JOINT TRENCH FOR SERVICES INCLUDING GAS, CATV & ELECTRIC FROM NEAREST POINT OF CONNECTION. DESIGN BY OTHERS.

DEMOLITION KEYNOTES 41 TO 41

41. DEMOLISH (E) IMPROVEMENTS AS NECESSARY TO ACCOMMODATE (N) CONSTRUCTION. NO DEMOLITION SHALL COMMENCE WITHOUT REQUIRED DEMOLITION PERMITS.

NOTE:
FOR CONSTRUCTION STAKING SCHEDULING OR QUOTATIONS PLEASE CONTACT GREG BRAZE AT LEA & BRAZE ENGINEERING (510)887-4086 EXT 103. gbraze@leabraze.com

*** BUILDING PAD NOTE:** ADJUST PAD LEVEL AS REQUIRED. REFER TO STRUCTURAL PLANS FOR SLAB SECTION OR CRAWL SPACE DEPTH TO ESTABLISH PAD LEVEL.

REGISTERED PROFESSIONAL ENGINEER PETER CARLINO No. C79555 CIVIL STATE OF CALIFORNIA ORIGINAL SIGNATURES IN BLUE INK

LEA & BRAZE ENGINEERING, INC.
CIVIL ENGINEERS • LAND SURVEYORS
BAY AREA REGION
2495 INDUSTRIAL PKWY WEST
HAYWARD, CALIFORNIA 94545
(P) (510) 887-4086
(F) (510) 887-3019
SACRAMENTO REGION
3017 DOUGLAS BLVD. # 300
ROSEVILLE, CA 95661
(P) (916)366-1338
(F) (916)797-7363
WWW.LEABRAZE.COM

LIAO RESIDENCE
181 ALVARADO AVENUE
LOS ALTOS, CALIFORNIA
SANTA CLARA COUNTY
APN: 167-29-058

GRADING & DRAINAGE PLAN

REVISIONS	BY
–	–
–	–
–	–
–	–
–	–

JOB NO:	2150310
DATE:	XX-XX-XX
SCALE:	1" = 10'
DESIGN BY:	RB
DRAWN BY:	WA
SHEET NO:	C-2.0

GENERAL NOTES

ALL GENERAL NOTES, SHEET NOTES, AND LEGEND NOTES FOUND IN THESE DOCUMENTS SHALL APPLY TYPICALLY THROUGHOUT. IF INCONSISTENCIES ARE FOUND IN THE VARIOUS NOTATIONS, NOTIFY THE ENGINEER IMMEDIATELY IN WRITING REQUESTING CLARIFICATION.

THESE DRAWINGS AND THEIR CONTENT ARE AND SHALL REMAIN THE PROPERTY OF LEA AND BRAZE ENGINEERING, INC. WHETHER THE PROJECT FOR WHICH THEY ARE PREPARED IS EXECUTED OR NOT. THEY ARE NOT TO BE USED BY ANY PERSONS ON OTHER PROJECTS OR EXTENSIONS OF THE PROJECT EXCEPT BY AGREEMENT IN WRITING AND WITH APPROPRIATE COMPENSATION TO THE ENGINEER.

ALL WORK SHALL COMPLY WITH APPLICABLE CODES AND TRADE STANDARDS WHICH GOVERN EACH PHASE OF WORK INCLUDING, BUT NOT LIMITED TO, CALIFORNIA MECHANICAL CODE, CALIFORNIA PLUMBING CODE, CALIFORNIA ELECTRICAL CODE, CALIFORNIA FIRE CODE, CALTRANS STANDARDS AND SPECIFICATIONS, AND ALL APPLICABLE STATE AND/OR LOCAL CODES AND/OR LEGISLATION.

IT IS THE RESPONSIBILITY OF THE CONTRACTOR AND ALL SUBCONTRACTORS TO CHECK AND VERIFY ALL CONDITIONS, DIMENSIONS, LINES AND LEVELS INDICATED. PROPER FIT AND ATTACHMENT OF ALL PARTS IS REQUIRED. SHOULD THERE BE ANY DISCREPANCIES, IMMEDIATELY NOTIFY THE ENGINEER FOR CORRECTION OR ADJUSTMENT THE EVENT OF FAILURE TO DO SO, THE CONTRACTOR SHALL BE RESPONSIBLE FOR CORRECTION OF ANY ERROR.

ALL DIMENSIONS AND CONDITIONS SHALL BE CHECKED AND VERIFIED ON THE JOB BY EACH SUBCONTRACTOR BEFORE HE/SHE BEGINS HIS/HER WORK. ANY ERRORS, OMISSION, OR DISCREPANCIES SHALL BE BROUGHT TO THE ATTENTION OF THE OWNER/CONTRACTOR BEFORE CONSTRUCTION BEGINS.

COMMENCEMENT OF WORK BY THE CONTRACTOR AND/OR ANY SUBCONTRACTOR SHALL INDICATE KNOWLEDGE AND ACCEPTANCE OF ALL CONDITIONS DESCRIBED IN THESE CONSTRUCTION DOCUMENTS, OR EXISTING ON SITE, WHICH COULD AFFECT THEIR WORK.

WORK SEQUENCE

IN THE EVENT ANY SPECIAL SEQUENCING OF THE WORK IS REQUIRED BY THE OWNER OR THE CONTRACTOR, THE CONTRACTOR SHALL ARRANGE A CONFERENCE BEFORE ANY SUCH WORK IS BEGUN.

SITE EXAMINATION: THE CONTRACTOR AND ALL SUBCONTRACTORS SHALL THOROUGHLY EXAMINE THE SITE AND FAMILIARIZE HIM/HERSELF WITH THE CONDITIONS UNDER WHICH THE WORK IS TO BE PERFORMED. THE CONTRACTOR SHALL VERIFY AT THE SITE ALL MEASUREMENTS AFFECTING HIS/HER WORK AND SHALL BE RESPONSIBLE FOR THE CORRECTIONS OF THE SAME. NO EXTRA COMPENSATION WILL BE ALLOWED TO THE CONTRACTOR FOR EXPENSES DUE TO HIS/HER NEGLECT TO EXAMINE, OR FAILURE TO DISCOVER, CONDITIONS WHICH AFFECT HIS/HER WORK.

LEA AND BRAZE ENGINEERING, INC. EXPRESSLY RESERVES ITS COMMON LAW COPYRIGHT AND OTHER PROPERTY RIGHTS IN THESE PLANS. THESE PLANS ARE NOT TO BE REPRODUCED, CHANGED OR COPIED IN ANY FORM OR MANNER WHATSOEVER, NOR ARE THEY TO BE ASSIGNED TO A THIRD PARTY WITHOUT FIRST OBTAINING THE WRITTEN PERMISSION AND CONSENT OF LEA AND BRAZE ENGINEERING, INC. IN THE EVENT OF UNAUTHORIZED REUSE OF THESE PLANS BY A THIRD PARTY, THE THIRD PARTY SHALL HOLD HARMLESS LEA AND BRAZE ENGINEERING, INC.

CONSTRUCTION IS ALWAYS LESS THAN PERFECT SINCE PROJECTS REQUIRE THE COORDINATION AND INSTALLATION OF MANY INDIVIDUAL COMPONENTS BY VARIOUS CONSTRUCTION INDUSTRY TRADES. THESE DOCUMENTS CANNOT PORTRAY ALL COMPONENTS OR ASSEMBLIES EXACTLY. IT IS THE INTENTION OF THESE ENGINEERING DOCUMENTS THAT THEY REPRESENT A REASONABLE STANDARD OF CARE IN THEIR CONTENT. IT IS ALSO PRESUMED BY THESE DOCUMENTS THAT CONSTRUCTION REVIEW SERVICES WILL BE PROVIDED BY THE ENGINEER. SHOULD THE OWNER NOT RETAIN THE ENGINEER TO PROVIDE SUCH SERVICES, OR SHOULD HE/SHE RETAIN THE ENGINEER TO PROVIDE ONLY PARTIAL OR LIMITED SERVICES, THEN IT SHALL BE THE OWNER'S AND CONTRACTOR'S RESPONSIBILITY TO FULLY RECOGNIZE AND PROVIDE THAT STANDARD OF CARE.

IF THE OWNER OR CONTRACTOR OBSERVES OR OTHERWISE BECOMES AWARE OF ANY FAULT OR DEFECT IN THE PROJECT OR NONCONFORMANCE WITH THE CONTRACT DOCUMENTS, PROMPT WRITTEN NOTICE THEREOF SHALL BE GIVEN BY THE OWNER AND/OR CONTRACTOR TO THE ENGINEER.

THE ENGINEER SHALL NOT HAVE CONTROL OF OR CHARGE OF AND SHALL NOT BE RESPONSIBLE FOR CONSTRUCTION MEANS, METHODS, TECHNIQUES, SEQUENCES, OR PROCEDURES, OR FOR SAFETY PRECAUTIONS AND PROGRAMS IN CONNECTION WITH THE WORK, FOR THE ACTS OR OMISSIONS OF THE CONTRACTOR, SUBCONTRACTORS, OR ANY OTHER PERSONS PERFORMING ANY OF THE WORK, OR FOR THE FAILURE OF ANY OF THEM TO CARRY OUT THE WORK IN ACCORDANCE WITH THE CONTRACT DOCUMENTS.

SITE PROTECTION

PROTECT ALL LANDSCAPING THAT IS TO REMAIN. ANY DAMAGE OR LOSS RESULTING FROM EXCAVATION, GRADING, OR CONSTRUCTION WORK SHALL BE CORRECTED OR REPLACED BY THE CONTRACTOR AT NO ADDITIONAL COST TO THE OWNER. THE CONTRACTOR SHALL BE RESPONSIBLE FOR THE LOCATION OF ALL EXISTING SITE UTILITIES AND SHALL COORDINATE THEIR REMOVAL OR MODIFICATIONS (IF ANY) TO AVOID ANY INTERRUPTION OF SERVICE TO ADJACENT AREAS. THE GENERAL CONTRACTOR SHALL INFORM HIM/HERSELF OF MUNICIPAL REGULATIONS AND CARRY OUT HIS/HER WORK IN COMPLIANCE WITH ALL FEDERAL AND STATE REQUIREMENTS TO REDUCE FIRE HAZARDS AND INJURIES TO THE PUBLIC.

STORMWATER POLLUTION PREVENTION NOTES

1) STORE, HANDLE, AND DISPOSE OF CONSTRUCTION MATERIALS AND WASTES PROPERLY, SO AS TO PREVENT THEIR CONTACT WITH STORMWATER.

2) CONTROL AND PREVENT THE DISCHARGE OF ALL POTENTIAL POLLUTANTS, INCLUDING SOLID WASTES, PAINTS, CONCRETE, PETROLEUM PRODUCTS, CHEMICALS, WASH WATER OR SEDIMENT, AND NON-STORMWATER DISCHARGES TO STORM DRAINS AND WATER COURSES.

3) USE SEDIMENT CONTROL OR FILTRATION TO REMOVE SEDIMENT FROM DEWATERING EFFLUENT.

4) AVOID CLEANING, FUELING, OR MAINTAINING VEHICLES ON SITE, EXCEPT IN A DESIGNATED AREA IN WHICH RUNOFF IS CONTAINED AND TREATED.

5) DELINEATE CLEARING LIMITS, EASEMENTS, SETBACKS, SENSITIVE OR CRITICAL AREAS, BUFFER ZONES, TREES AND DISCHARGE COURSE WITH FIELD MARKERS.

6) PROTECT ADJACENT PROPERTIES AND UNDISTURBED AREAS FROM CONSTRUCTION IMPACTS USING VEGETATIVE BUFFER STRIPS, SEDIMENT BARRIERS OF FILTERS, DIKES, MULCHING, OR OTHER MEASURES AS APPROPRIATE.

7) PERFORM CLEARING AND EARTH MOVING ACTIVITIES DURING DRY WEATHER TO THE MAXIMUM EXTENT PRACTICAL.

8) LIMIT AND TIME APPLICATIONS OF PESTICIDES AND FERTILIZERS TO PREVENT POLLUTED RUNOFF.

9) LIMIT CONSTRUCTION ACCESS ROUTES AND STABILIZE DESIGNATED ACCESS POINTS.

10) AVOID TRACKING DIRT OR MATERIALS OFF-SITE; CLEAN OFF-SITE PAVED AREAS AND SIDEWALKS USING DRY SWEEPING METHODS TO THE MAXIMUM EXTENT PRACTICAL.

SUPPLEMENTAL MEASURES

A. THE PHRASE "NO DUMPING – DRAINS TO BAY" OR EQUALLY EFFECTIVE PHRASE MUST BE LABELED ON STORM DRAIN INLETS (BY STENCILING, BRANDING, OR PLAQUES) TO ALERT THE PUBLIC TO THE DESTINATION OF STORM WATER AND TO PREVENT DIRECT DISCHARGE OF POLLUTANTS INTO THE STORM DRAIN.

B. USING FILTRATION MATERIALS ON STORM DRAIN COVERS TO REMOVE SEDIMENT FROM DEWATERING EFFLUENT.

C. STABILIZING ALL DENUDED AREAS AND MAINTAINING EROSION CONTROL MEASURES CONTINUOUSLY FROM OCTOBER 15 AND APRIL 15.

D. REMOVING SPOILS PROMPTLY, AND AVOID STOCKPILING OF FILL MATERIALS, WHEN RAIN IS FORECAST. IF RAIN THREATENS, STOCKPILED SOILS AND OTHER MATERIALS SHALL BE COVERED WITH A TARP OR OTHER WATERPROOF MATERIAL.

E. STORING, HANDLING, AND DISPOSING OF CONSTRUCTION MATERIALS AND WASTES SO AS TO AVOID THEIR ENTRY TO THE STORM DRAIN SYSTEMS OR WATER BODY.

F. AVOIDING CLEANING, FUELING, OR MAINTAINING VEHICLES ON-SITE, EXCEPT IN AN AREA DESIGNATED TO CONTAIN AND TREAT RUNOFF.

GRADING & DRAINAGE NOTES:

1. SCOPE OF WORK

THESE SPECIFICATIONS AND APPLICABLE PLANS PERTAIN TO AND INCLUDE ALL SITE GRADING AND EARTHWORK ASSOCIATED WITH THE PROJECT INCLUDING, BUT NOT LIMITED TO THE FURNISHING OF ALL LABOR, TOOLS AND EQUIPMENT NECESSARY FOR SITE CLEARING AND GRUBBING, SITE PREPARATION, DISPOSAL OF EXCESS OR UNSUITABLE MATERIAL, STRIPPING, KEYING, EXCAVATION, OVER EXCAVATION, RECOMPACTION PREPARATION FOR SOIL RECEIVING FILL, PAVEMENT, FOUNDATION OF SLABS, EXCAVATION, IMPORTATION OF ANY REQUIRED FILL MATERIAL, PROCESSING, PLACEMENT AND COMPACTION OF FILL AND SUBSIDIARY WORK NECESSARY TO COMPLETE THE GRADING TO CONFORM TO THE LINES, GRADING AND SLOPE SHOWN ON THE PROJECT GRADING PLANS.

2. GENERAL

A. ALL SITE GRADING AND EARTHWORK SHALL CONFORM TO THE RECOMMENDATIONS OF THESE SPECIFICATIONS, THE SOILS REPORT BY GEOFORNENSICS, INC. DATED: MARCH 10, 2015; AND THE CITY OF LOS ALTOS.

B. ALL FILL MATERIALS SHALL BE DENSIFIED SO AS TO PRODUCE A DENSITY NOT LESS THAN 90% RELATIVE COMPACTION BASED UPON ASTM TEST DESIGNATION D1557. FIELD DENSITY TEST WILL BE PERFORMED IN ACCORDANCE WITH ASTM TEST DESIGNATION 2922 AND 3017. THE LOCATION AND FREQUENCY OF THE FIELD DENSITY TEST WILL BE AS DETERMINED BY THE SOIL ENGINEER. THE RESULTS OF THESE TEST AND COMPLIANCE WITH THE SPECIFICATIONS WILL BE THE BASIS UPON WHICH SATISFACTORY COMPLETION OF THE WORK WILL BE JUDGED BY THE SOIL ENGINEER. ALL CUT AND FILL SLOPES SHALL BE CONSTRUCTED AS SHOWN ON PLANS, BUT NO STEEPER THAN TWO (2) HORIZONTAL TO ONE (1) VERTICAL.

C. THE CONTRACTOR SHALL BE RESPONSIBLE FOR THE SATISFACTORY COMPLETION OF ALL THE EARTHWORK IN ACCORDANCE WITH THESE PLANS AND SPECIFICATIONS. NO DEVIATION FROM THESE SPECIFICATIONS SHALL BE MADE EXCEPT UPON WRITTEN APPROVAL BY THE SOILS ENGINEER. BOTH CUT AND FILL AREAS SHALL BE SURFACE COMPLETED TO THE SATISFACTION OF THE SOILS ENGINEER AT THE CONCLUSION OF ALL GRADING OPERATIONS AND PRIOR TO FINAL ACCEPTANCE. THE CONTRACTOR SHALL NOTIFY THE SOILS ENGINEER AT LEAST TWO (2) WORKING DAYS PRIOR TO DOING ANY SITE GRADING AND EARTHWORK INCLUDING CLEARING.

3. CLEARING AND GRUBBING

A. THE CONTRACTOR SHALL ACCEPT THE SITE IN ITS PRESENT CONDITION. ALL EXISTING PUBLIC IMPROVEMENTS SHALL BE PROTECTED. ANY IMPROVEMENTS DAMAGED SHALL BE REPLACED BY THE CONTRACTOR AS DIRECTED BY THE LOCAL JURISDICTION WITH NO EXTRA COMPENSATION.

B. ALL ABANDONED BUILDINGS AND FOUNDATIONS, TREE (EXCEPT THOSE SPECIFIED TO REMAIN FOR LANDSCAPING PURPOSES), FENCES, VEGETATION AND ANY SURFACE DEBRIS SHALL BE REMOVED AND DISPOSED OF OFF THE SITE BY THE CONTRACTOR.

C. ALL ABANDONED SEPTIC TANKS AND ANY OTHER SUBSURFACE STRUCTURES EXISTING IN PROPOSED DEVELOPMENT AREAS SHALL BE REMOVED PRIOR TO ANY GRADING OR FILL OPERATION. ALL APPURTENANT DRAIN FIELDS AND OTHER CONNECTING LINES MUST ALSO BE TOTALLY REMOVED.

D. ALL ABANDONED UNDERGROUND IRRIGATION OR UTILITY LINES SHALL BE REMOVED OR DEMOLISHED. THE APPROPRIATE FINAL DISPOSITION OF SUCH LINES DEPEND UPON THEIR DEPTH AND LOCATION AND THE METHOD OF REMOVAL OR DEMOLITION SHALL BE DETERMINED BY THE SOILS ENGINEER. ONE OF THE FOLLOWING METHODS WILL BE USED:

(1) EXCAVATE AND TOTALLY REMOVE THE UTILITY LINE FROM THE TRENCH.

(2) EXCAVATE AND CRUSH THE UTILITY LINE IN THE TRENCH.

(3) CAP THE ENDS OF THE UTILITY LINE WITH CONCRETE TO PREVENT THE ENTRANCE OF WATER. THE LOCATIONS AT WHICH THE UTILITY LINE WILL BE CAPPED WILL BE DETERMINED BY THE UTILITY DISTRICT ENGINEER. THE LENGTH OF THE CAP SHALL NOT BE LESS THAN FIVE FEET, AND THE CONCRETED MIX EMPLOYED SHALL HAVE MINIMUM SHRINKAGE.

4. SITE PREPARATION AND STRIPPING

A. ALL SURFACE ORGANICS SHALL BE STRIPPED AND REMOVED FROM BUILDING PADS, AREAS TO RECEIVE COMPACTED FILL AND PAVEMENT AREAS.

B. UPON THE COMPLETION OF THE ORGANIC STRIPPING OPERATION, THE GROUND SURFACE (NATIVE SOIL SUBGRADE) OVER THE ENTIRE AREA OF ALL BUILDING PADS, STREET AND PAVEMENT AREAS AND ALL AREAS TO RECEIVE COMPACTED FILL SHALL BE PLOWED OR SCARIFIED UNTIL THE SURFACE IS FREE OF RUTS, HUMMOCKS OR OTHER UNEVEN FEATURES WHICH MAY INHIBIT UNIFORM SOIL COMPACTION. THE GROUND SURFACE SHALL THEN BE DISCED OR BLADED TO A DEPTH OF AT LEAST 6 INCHES. UPON ENGINEER'S SATISFACTION, THE NEW SURFACE SHALL BE WATER CONDITIONED AND RECOMPACTED PER REQUIREMENTS FOR COMPACTING FILL MATERIAL.

5. EXCAVATION

A. UPON COMPLETION OF THE CLEARING AND GRUBBING, SITE PREPARATION AND STRIPPING, THE CONTRACTOR SHALL MAKE EXCAVATIONS TO LINES AND GRADES NOTED ON THE PLAN. WHERE REQUIRED BY THE SOILS ENGINEER, UNACCEPTABLE NATIVE SOILS OR UNENGINEERED FILL SHALL BE OVER EXCAVATED BELOW THE DESIGN GRADE. SEE PROJECT SOILS REPORT FOR DISCUSSION OF OVER EXCAVATION OF THE UNACCEPTABLE MATERIAL. RESULTING GROUND LINE SHALL BE SCARIFIED, MOISTURE-CONDITIONED AND RECOMPACTED AS SPECIFIED IN SECTION 4 OF THESE SPECIFICATIONS. COMPACTED FILL MATERIAL SHALL BE PLACED TO BRING GROUND LEVEL BACK TO DESIGN GRADE.

B. EXCAVATED MATERIALS SUITABLE FOR COMPACTED FILL MATERIAL SHALL BE UTILIZED IN MAKING THE REQUIRED COMPACTED FILLS. THOSE NATIVE MATERIALS CONSIDERED UNSUITABLE BY THE SOILS ENGINEER SHALL BE DISPOSED OF OFF THE SITE BY THE CONTRACTOR.

6. PLACING, SPREADING AND COMPACTING FILL MATERIAL

A. FILL MATERIALS

THE MATERIALS PROPOSED FOR USE AS COMPACTED FILL SHALL BE APPROVED BY THE SOILS ENGINEER BEFORE COMMENCEMENT OF GRADING OPERATIONS. THE NATIVE MATERIAL IS CONSIDERED SUITABLE FOR FILL; HOWEVER, ANY NATIVE MATERIAL DESIGNATED UNSUITABLE BY THE SOILS ENGINEER SHALL BE REMOVED FROM THE SITE BY THE CONTRACTOR. ANY IMPORTED MATERIAL SHALL BE APPROVED FOR USE BY THE SOILS ENGINEER, IN WRITING, BEFORE BEING IMPORTED TO THE SITE AND SHALL POSSESS SUFFICIENT FINES TO PROVIDE A COMPETENT SOIL MATRIX AND SHALL BE FREE OF VEGETATIVE AND ORGANIC MATTER AND OTHER DELETERIOUS MATERIALS. ALL FILL VOIDS SHALL BE FILLED AND PROPERLY COMPACTED. NO ROCKS LARGER THAN THREE INCHES IN DIAMETER SHALL BE PERMITTED.

B. FILL CONSTRUCTION

THE SOILS ENGINEER SHALL APPROVE THE NATIVE SOIL SUBGRADE BEFORE PLACEMENT OF ANY COMPACTED FILL MATERIAL. UNACCEPTABLE NATIVE SOIL SHALL BE REMOVED AS DIRECTED BY THE SOILS ENGINEER. THE RESULTING GROUND LINE SHALL BE SCARIFIED MOISTURE CONDITIONED AND RECOMPACTED AS SPECIFIED IN SECTION 4 OF THESE SPECIFICATIONS. COMPACTED FILL MATERIAL SHALL BE PLACED TO BRING GROUND LEVEL BACK TO DESIGN GRADE. GROUND PREPARATION SHALL BE FOLLOWED CLOSELY BY FILL PLACEMENT TO PREVENT DRYING OUT OF THE SUBSOIL BEFORE PLACEMENT OF THE FILL.

THE APPROVED FILL MATERIALS SHALL BE PLACED IN UNIFORM HORIZONTAL LAYERS NO THICKER THAN 8" IN LOOSE THICKNESS. LAYERS SHALL BE SPREAD EVENLY AND SHALL BE THOROUGHLY BLADE MIXED DURING THE SPREADING TO ENSURE UNIFORMITY OF MATERIAL IN EACH LAYER. THE SCARIFIED SUBGRADE AND FILL MATERIAL SHALL BE MOISTURE CONDITIONED TO AT LEAST OPTIMUM MOISTURE. WHEN THE MOISTURE CONTENT OF THE FILL IS BELOW THAT SPECIFIED, WATER SHALL BE ADDED UNTIL THE MOISTURE DURING THE COMPACTION PROCESS. WHEN THE MOISTURE CONTENT OF THE FILL IS ABOVE THAT SPECIFIED, THE FILL MATERIAL SHALL BE AERATED BY BLADING OR OTHER SATISFACTORY METHODS UNTIL THE MOISTURE CONTENT IS AS SPECIFIED.

AFTER EACH LAYER HAS BEEN PLACED, MIXED, SPREAD EVENLY AND MOISTURE CONDITIONED, IT SHALL BE COMPACTED TO AT LEAST THE SPECIFIED DENSITY.

THE FILL OPERATION SHALL BE CONTINUED IN COMPACTED LAYERS AS SPECIFIED ABOVE UNTIL THE FILL HAS BEEN BROUGHT TO THE FINISHED SLOPES AND GRADES AS SHOWN ON THE PLANS. NO LAYER SHALL BE ALLOWED TO DRY OUT BEFORE SUBSEQUENT LAYERS ARE PLACED.

COMPACTION EQUIPMENT SHALL BE OF SUCH DESIGN THAT IT WILL BE ABLE TO COMPACT THE FILL TO THE SPECIFIED MINIMUM COMPACTION WITHIN THE SPECIFIED MOISTURE CONTENT RANGE. COMPACTION OF EACH LAYER SHALL BE CONTINUOUS OVER ITS ENTIRE AREA UNTIL THE REQUIRED MINIMUM DENSITY HAS BEEN OBTAINED.

7. CUT OR FILL SLOPES

ALL CONSTRUCTED SLOPES, BOTH CUT AND FILL, SHALL BE NO STEEPER THAN 2 TO 1 (HORIZONTAL TO VERTICAL). DURING THE GRADING OPERATION, COMPACTED FILL SLOPES SHALL BE OVERFILLED BY AT LEAST ONE FOOT HORIZONTALLY AT THE COMPLETION OF THE GRADING OPERATIONS, THE EXCESS FILL EXISTING ON THE SLOPES SHALL BE BLADED OFF TO CREATE THE FINISHED SLOPE EMBANKMENT. ALL CUT AND FILL SLOPES SHALL BE TRACK WALKED AFTER BEING BROUGHT TO FINISH GRADE AND THEN BE PLANTED WITH EROSION CONTROL SLOPE PLANTING. THE SOILS ENGINEER SHALL REVIEW ALL CUT SLOPES TO DETERMINE IF ANY ADVERSE GEOLOGIC CONDITIONS ARE EXPOSED. IF SUCH CONDITIONS DO OCCUR, THE SOILS ENGINEER SHALL RECOMMEND THE APPROPRIATE MITIGATION MEASURES AT THE TIME OF THEIR DETECTION.

8. SEASONAL LIMITS AND DRAINAGE CONTROL

FILL MATERIALS SHALL NOT BE PLACED, SPREAD OR COMPACTED WHILE IT IS AT AN UNSUITABLY HIGH MOISTURE CONTENT OR DURING OTHERWISE UNFAVORABLE CONDITIONS. WHEN THE WORK IS INTERRUPTED FOR ANY REASON THE FILL OPERATIONS SHALL NOT BE RESUMED UNTIL FIELD TEST PERFORMED BY THE SOILS ENGINEER INDICATE THAT THE MOISTURE CONDITIONS IN AREAS TO BE FILLED ARE AS PREVIOUSLY SPECIFIED. ALL EARTH MOVING AND WORKING OPERATIONS SHALL BE CONTROLLED TO PREVENT WATER FROM RUNNING INTO EXCAVATED AREAS. ALL EXCESS WATER SHALL BE PROMPTLY REMOVED AND THE SITE KEPT DRY.

9. DUST CONTROL

THE CONTRACTOR SHALL TAKE ALL STEPS NECESSARY FOR THE ALLEVIATION OR PREVENTION OF ANY DUST NUISANCE ON OR ABOUT THE SITE CAUSED BY THE CONTRACTOR'S OPERATION EITHER DURING THE PERFORMANCE OF THE GRADING OR RESULTING FROM THE CONDITION IN WHICH THE CONTRACTOR LEAVES THE SITE. THE CONTRACTOR SHALL ASSUME ALL LIABILITY INCLUDING COURT COST OF CO-DEFENDANTS FOR ALL CLAIMS RELATED TO DUST OR WIND-BLOWN MATERIALS ATTRIBUTABLE TO HIS WORK. COST FOR THIS ITEM OF WORK IS TO BE INCLUDED IN THE EXCAVATION ITEM AND NO ADDITIONAL COMPENSATION SHALL BE ALLOWED.

10. INDEMNITY

THE CONTRACTOR WILL HOLD HARMLESS, INDEMNIFY AND DEFEND THE ENGINEER, THE OWNER AND HIS CONSULTANTS AND EACH OF THEIR OFFICERS AND EMPLOYEES AND AGENTS, FROM ANY AND ALL LIABILITY CLAIMS, LOSSES OR DAMAGE ARISING OR ALLEGED TO HEREIN, BUT NOT INCLUDING THE SOLE NEGLIGENCE OF THE OWNER, THE ARCHITECT, THE ENGINEER AND HIS CONSULTANTS AND EACH OF THEIR OFFICERS AND EMPLOYEES AND AGENTS.

11. SAFETY

IN ACCORDANCE WITH GENERALLY ACCEPTED CONSTRUCTION PRACTICES, THE CONTRACTOR WILL BE SOLELY AND COMPLETELY RESPONSIBLE FOR CONDITIONS OF THE JOB SITE. INCLUDING SAFETY OF ALL PERSONS AND PROPERTY DURING PERFORMANCE OF THE WORK. THIS REQUIREMENT WILL APPLY CONTINUOUSLY AND NOT BE LIMITED TO NORMAL WORKING HOURS.

THE DUTY OF THE ENGINEERS TO CONDUCT CONSTRUCTION REVIEW OF THE CONTRACTOR'S PERFORMANCE IS NOT INTENDED TO INCLUDE REVIEW OF THE ADEQUACY OF THE CONTRACTOR'S SAFETY MEASURES, IN, ON OR NEAR THE CONSTRUCTION SITE.

12. GUARANTEE

NEITHER THE FINAL PAYMENT, NOR THE PROVISIONS IN THE CONTRACT, NOR PARTIAL, NOR ENTIRE USE OR OCCUPANCY OF THE PREMISES BY THE OWNER SHALL CONSTITUTE AN ACCEPTANCE OF THE WORK NOT DONE IN ACCORDANCE WITH THE CONTRACT OR RELIEVES THE CONTRACTOR OF LIABILITY IN RESPECT TO ANY EXPRESS WARRANTIES OR RESPONSIBILITY FOR FAULTY MATERIAL OR WORKMANSHIP.

THE CONTRACTOR SHALL REMEDY ANY DEFECTS IN WORK AND PAY FOR ANY DAMAGE TO OTHER WORK RESULTING THERE FROM WHICH SHALL APPEAR WITHIN A PERIOD OF ONE (1) CALENDAR YEAR FROM THE DATE OF FINAL ACCEPTANCE OF THE WORK.

13. TRENCH BACKFILL

EITHER THE ON-SITE INORGANIC SOIL OR APPROVED IMPORTED SOIL MAY BE USED AS TRENCH BACKFILL. THE BACKFILL MATERIAL SHALL BE MOISTURE CONDITIONED PER THESE SPECIFICATIONS AND SHALL BE PLACED IN LIFTS OF NOT MORE THAN SIX INCHES IN HORIZONTAL UNCOMPACTED LAYERS AND BE COMPACTED BY MECHANICAL MEANS TO A MINIMUM OF 90% RELATIVE COMPACTION. IMPORTED SAND MAY BE USED FOR TRENCH BACKFILL MATERIAL PROVIDED IT IS COMPACTED TO AT LEAST 90% RELATIVE COMPACTION. WATER JETTING ASSOCIATED WITH COMPACTION USING VIBRATORY EQUIPMENT WILL BE PERMITTED ONLY WITH IMPORTED SAND BACKFILL WITH THE APPROVAL OF THE SOILS ENGINEER. ALL PIPES SHALL BE BEDDED WITH SAND EXTENDING FROM THE TRENCH BOTTOM TO TWELVE INCHES ABOVE THE PIPE. SAND BEDDING IS TO BE COMPACTED AS SPECIFIED ABOVE FOR SAND BACKFILL.

14. EROSION CONTROL

A. ALL GRADING, EROSION AND SEDIMENT CONTROL AND RELATED WORK UNDERTAKEN ON THIS SITE IS SUBJECT TO ALL TERMS AND CONDITIONS OF THE COUNTY GRADING ORDINANCE AND MADE A PART HEREOF BY REFERENCE.

B. THE CONTRACTOR WILL BE LIABLE FOR ANY AND ALL DAMAGES TO ANY PUBLICLY OWNED AND MAINTAINED ROAD CAUSED BY THE AFORESAID CONTRACTOR'S GRADING ACTIVITIES, AND SHALL BE RESPONSIBLE FOR THE CLEANUP OF ANY MATERIAL SPILLED ON ANY PUBLIC ROAD ON THE HAUL ROUTE.

C. THE EROSION CONTROL MEASURES ARE TO BE OPERABLE DURING THE RAINY SEASON, GENERALLY FROM OCTOBER FIRST TO APRIL FIFTEENTH. EROSION CONTROL PLANTING IS TO BE COMPLETED BY OCTOBER FIRST. NO GRADING OR UTILITY TRENCHING SHALL OCCUR BETWEEN OCTOBER FIRST AND APRIL FIFTEENTH UNLESS AUTHORIZED BY THE LOCAL JURISDICTION.

D. ALL EROSION CONTROL MEASURES SHALL BE MAINTAINED UNTIL DISTURBED AREAS ARE STABILIZED AND CHANGES TO THIS EROSION AND SEDIMENT CONTROL PLAN SHALL BE MADE TO MEET FIELD CONDITIONS ONLY WITH THE APPROVAL OF OR AT THE DIRECTION OF THE SOILS ENGINEER.

E. DURING THE RAINY SEASON, ALL PAVED AREAS SHALL BE KEPT CLEAR OF EARTH MATERIAL AND DEBRIS. THE SITE SHALL BE MAINTAINED SO AS TO MINIMIZE SEDIMENT-LADEN RUNOFF TO ANY STORM DRAINAGE SYSTEM.

F. ALL EROSION CONTROL FACILITIES MUST BE INSPECTED AND REPAIRED AT THE END OF EACH WORKING DAY DURING THE RAINY SEASON.

G. WHEN NO LONGER NECESSARY AND PRIOR TO FINAL ACCEPTANCE OF DEVELOPMENT, SEDIMENT BASINS SHALL BE REMOVED OR OTHERWISE DEACTIVATED AS REQUIRED BY THE LOCAL JURISDICTION.

H. A CONSTRUCTION ENTRANCE SHALL BE PROVIDED AT ANY POINT OF EGRESS FROM THE SITE TO ROADWAY. A CONSTRUCTION ENTRANCE SHOULD BE COMPOSED OF COARSE DRAIN ROCK (2" TO 3") MINIMUM DIAMETER) AT LEAST EIGHT INCHES THICK BY FIFTY (50) FEET LONG BY TWENTY (20) FEET WIDE UNLESS SHOWN OTHERWISE ON PLAN AND SHALL BE MAINTAINED UNTIL THE SITE IS PAVED.

I. ALL AREAS SPECIFIED FOR HYDROSEEDING SHALL BE NOZZLE PLANTED WITH STABILIZATION MATERIAL CONSISTING OF FIBER, SEED, FERTILIZER AND WATER, MIXED AND APPLIED IN THE FOLLOWING PROPORTIONS:

FIBER, 2000 LBS/ACRE
SEED, 200 LBS/ACRE (SEE NOTE J, BELOW)
FERTILIZER (11-8-4), 500 LBS/ACRE
WATER, AS REQUIRED FOR APPLICATION

J. SEED MIX SHALL BE PER CALTRANS STANDARDS.

K. WATER UTILIZED IN THE STABILIZATION MATERIAL SHALL BE OF SUCH QUALITY THAT IT WILL PROMOTE GERMINATION AND STIMULATE GROWTH OF PLANTS. IT SHALL BE FREE OF POLLUTANT MATERIALS AND WEED SEED.

L. HYDROSEEDING SHALL CONFORM TO THE PROVISIONS OF SECTION 20, EROSION CONTROL AND HIGHWAY PLANTING", OF THE STANDARD SPECIFICATIONS OF THE STATE OF CALIFORNIA DEPARTMENT OF TRANSPORTATION, AS LAST REVISED.

M. A DISPERSING AGENT MAY BE ADDED TO THE HYDROSEEDING MATERIAL, PROVIDED THAT THE CONTRACTOR FURNISHES SUITABLE EVIDENCE THAT THE ADDITIVE WILL NOT ADVERSELY AFFECT THE PERFORMANCE OF THE SEEDING MIXTURE.

N. STABILIZATION MATERIALS SHALL BE APPLIED AS SOON AS PRACTICABLE AFTER COMPLETION OF GRADING OPERATIONS AND PRIOR TO THE ONSET OF WINTER RAINS, OR AT SUCH OTHER TIME AS DIRECTED BY THE COUNTY ENGINEER. THE MATERIAL SHALL BE APPLIED BEFORE INSTALLATION OF OTHER LANDSCAPING MATERIALS SUCH AS TREES, SHRUBS AND GROUND COVERS.

O. THE STABILIZATION MATERIAL SHALL BE APPLIED WITHIN 4-HOURS AFTER MIXING. MIXED MATERIAL NOT USED WITHIN 4-HOURS SHALL BE REMOVED FROM THE SITE.

P. THE CONTRACTOR SHALL MAINTAIN THE SOIL STABILIZATION MATERIAL AFTER PLACEMENT. THE COUNTY ENGINEER MAY REQUIRE SPRAY APPLICATION OF WATER OR OTHER MAINTENANCE ACTIVITIES TO ASSURE THE EFFECTIVENESS OF THE STABILIZATION PROCESS. APPLICATION OF WATER SHALL BE ACCOMPLISHED USING NOZZLES THAT PRODUCE A SPRAY THAT DOES NOT CONCENTRATE OR WASH AWAY THE STABILIZATION MATERIALS.

15. CLEANUP

THE CONTRACTOR MUST MAINTAIN THE SITE CLEAN, SAFE AND IN USABLE CONDITION. ANY SPILLS OF SOIL, ROCK OR CONSTRUCTION MATERIAL MUST BE REMOVED FROM THE SITE BY THE CONTRACTOR DURING CONSTRUCTION AND UPON COMPLETION OF THE PROJECT. COST FOR THIS ITEM OF WORK SHALL BE INCLUDED IN THE EXCAVATION AND COMPACTION ITEM AND NO ADDITIONAL COMPENSATION SHALL BE ALLOWED.

NOTE:
THESE NOTES ARE INTENDED TO BE USED AS A GENERAL GUIDELINE. THE REFERENCED SOILS REPORT FOR THE PROJECT AND GOVERNING AGENCY GRADING ORDINANCE SHALL SUPERSEDE THESE NOTES. THE SOILS ENGINEER MAY MAKE ON-SITE RECOMMENDATIONS DURING GRADING OPERATIONS.

REGISTERED PROFESSIONAL ENGINEER
PETER CARLINO
No. C79555
CIVIL
STATE OF CALIFORNIA
ORIGINAL SIGNATURES IN BLUE INK

LEA & BRAZE ENGINEERING, INC.
CIVIL ENGINEERS · LAND SURVEYORS
BAY AREA REGION
2495 INDUSTRIAL PKWY WEST
HAYWARD, CALIFORNIA 94545
(P) (510) 887-4086
(F) (510) 887-3019
SACRAMENTO REGION
3017 DOUGLAS BLVD, # 300
ROSEVILLE, CA 95661
(P) (916)966-1338
(F) (916)797-7363
WWW.LEABRAZE.COM

LIAO RESIDENCE
181 ALVARADO AVENUE
LOS ALTOS, CALIFORNIA
SANTA CLARA COUNTY
APN: 167-29-058

GRADING SPECIFICATIONS

REVISIONS	BY
–	–
–	–
–	–
–	–
–	–

JOB NO:	2150310
DATE:	XX-XX-XX
SCALE:	NO SCALE
DESIGN BY:	RB
DRAWN BY:	WA

SHEET NO:
C-3.0

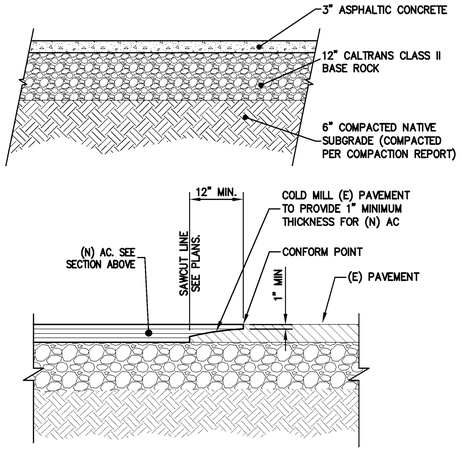

NOTES:

1. TIE-IN PAVEMENT SECTION AS SHOWN ON PLANS.
2. TIE-IN OF ASPHALT CONCRETE SHALL EXTEND TO AT LEAST THE BOTTOM OF EXISTING ASPHALT CONCRETE.

1 C-4.0 **AC PAVING**
NTS

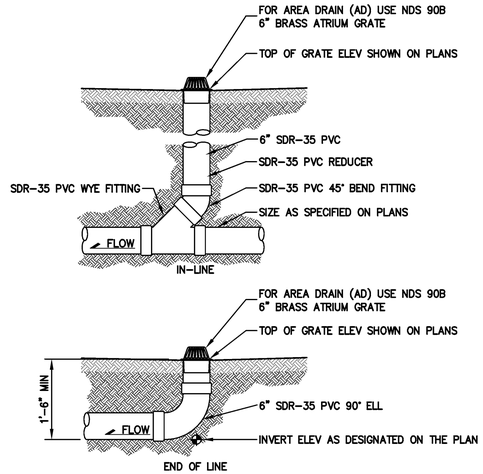

NOTE:
GLUED FITTINGS MAY BE SUBSTITUTED FOR GASKETED FITTINGS AT THE OPTION OF THE INSTALLATION CONTRACTOR.

2 C-4.0 **AREA DRAIN (AD)**
NTS

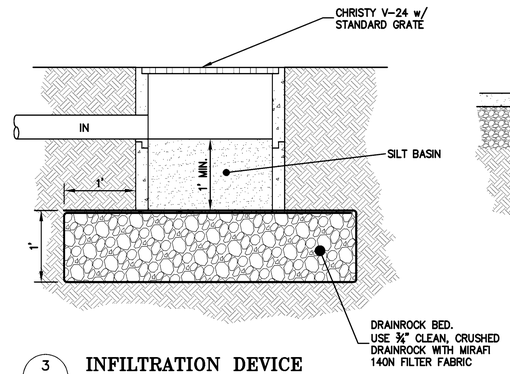

3 C-4.0 **INFILTRATION DEVICE**
NTS

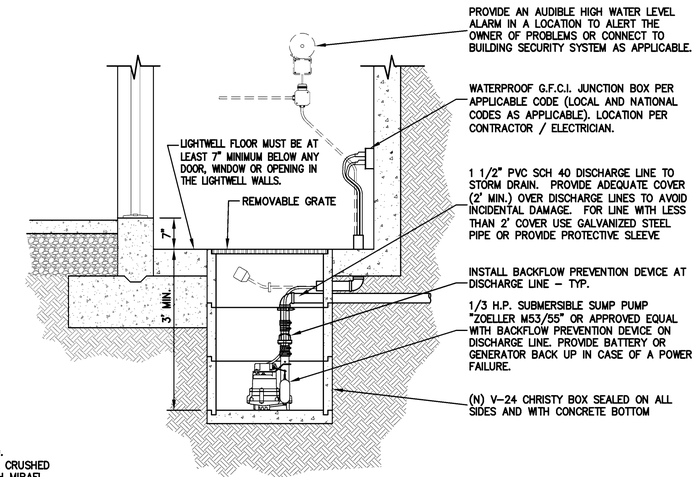

NOTES:
IF RAT SLAB DRAINS ARE CALLED FOR CONNECT TO INLET AT SAME ELEVATION OR HIGHER SUBDRAIN.

4 C-4.0 **LIGHTWELL SUMP PUMP**
NTS

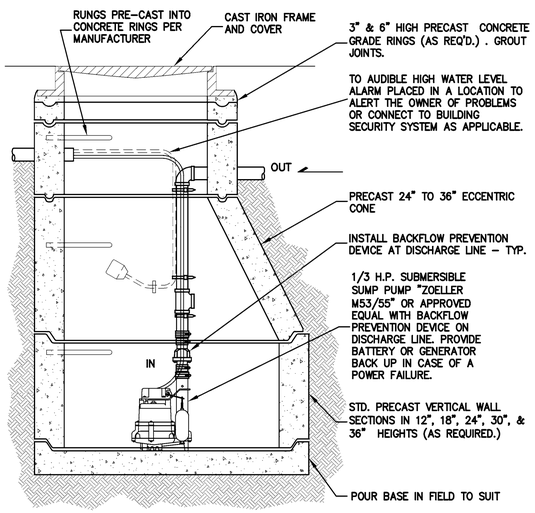

5 C-4.0 **SUBDRAIN SUMP PUMP**
NTS

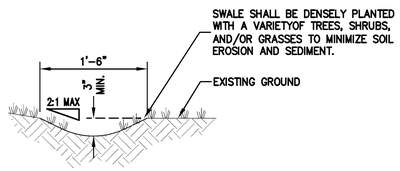

6 C-4.0 **VEGETATED SWALE DETAIL**
NTS

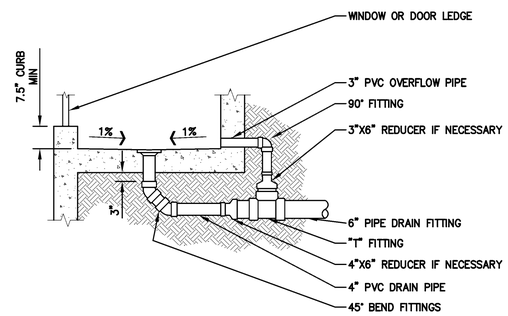

NOTES:

1. SLOPE INTERIOR SLAB OF LIGHTWELL @ 1% MIN IN ALL DIRECTIONS TO DIRECT FLOW TOWARDS INLET.
2. MAINTAIN 6" MIN FROM BOTTOM OF SILL/DOOR TO BOTTOM OF LIGHTWELL.
3. INSTALL "NEENAH R-4344" GRATE AND 3" PVC OUT GOING PIPE IN LIGHTWELLS NOT INTENDED TO HAVE FOOT TRAFFIC.
4. INSTALL 4" METAL GRATE AND 4" PVC OUTGOING PIPE IN AREAS INTENDED TO HAVE FOOT TRAFFIC.
5. INSTALL 3" PVC OVERFLOW PIPE AS SHOWN.
6. CONTRACTOR SHALL SUBMIT TO THE OWNER IN WRITING THE NEED FOR PERIODIC MAINTENANCE AND REMOVAL OF DEBRIS.
7. REFER TO STRUCTURAL PLAN FOR WALL CONSTRUCTION DETAIL.

9 C-4.0 **LIGHTWELL OVERFLOW DETAIL**
NTS

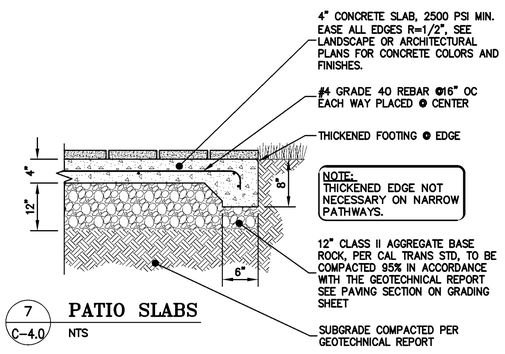

NOTE:
THICKENED EDGE NOT NECESSARY ON NARROW PATHWAYS.

7 C-4.0 **PATIO SLABS**
NTS

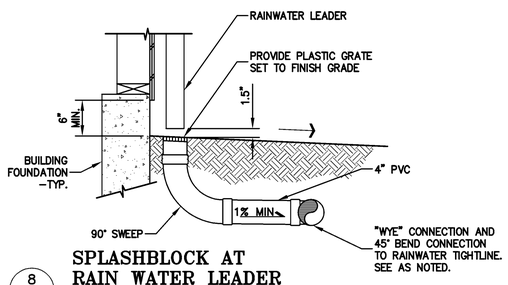

8 C-4.0 **SPLASHBLOCK AT RAIN WATER LEADER**
NTS

NOTE:
1. SUBGRADE TO BE COMPACTED PER GEOTECHNICAL REPORT

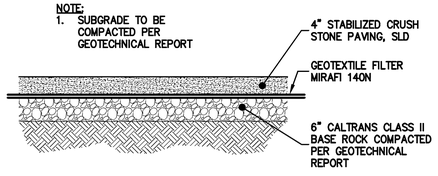

11 C-4.0 **DECOMPOSED GRANITE (DG)**
NTS

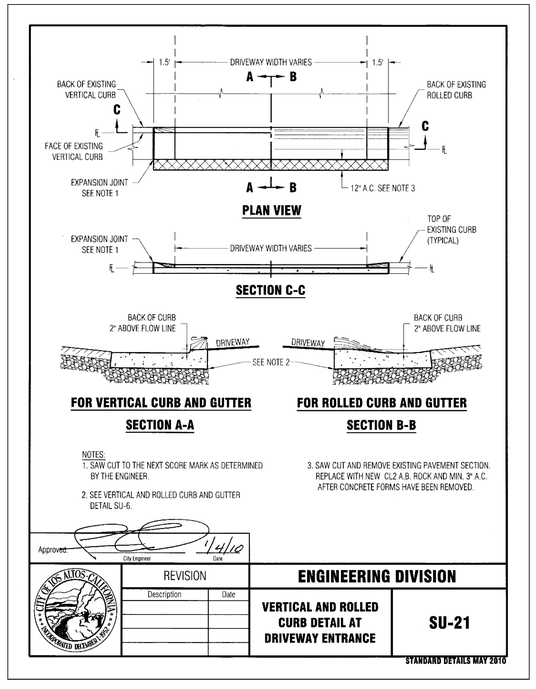

10 C-4.0 **DRIVEWAY APRON VERTICAL & ROLLED CURB**
NTS

REGISTERED PROFESSIONAL ENGINEER
PETER CARLINO
No. C79555
CIVIL
STATE OF CALIFORNIA
ORIGINAL SIGNATURES IN BLUE INK

LEA & BRAZE ENGINEERING, INC.
CIVIL ENGINEERS · LAND SURVEYORS
BAY AREA REGION
2495 INDUSTRIAL PKWY WEST
HAYWARD, CALIFORNIA 94545
(P) (510) 887-4086
(F) (510) 887-3019
SACRAMENTO REGION
3017 DOUGLAS BLVD. # 300
ROSEVILLE, CA 95661
(P) (916)966-1338
(F) (916)797-7363
WWW.LEABRAZE.COM

LIAO RESIDENCE
181 ALVARADO AVENUE
LOS ALTOS, CALIFORNIA
SANTA CLARA COUNTY
APN: 167-29-058

DETAILS

REVISIONS	BY
–	–
–	–
–	–
–	–
–	–

JOB NO:	2150310
DATE:	XX-XX-XX
SCALE:	NTS
DESIGN BY:	RB
DRAWN BY:	WA
SHEET NO:	C-4.0

PURPOSE:

THE PURPOSE OF THIS PLAN IS TO STABILIZE THE SITE TO PREVENT EROSION OF GRADED AREAS AND TO PREVENT SEDIMENTATION FROM LEAVING THE CONSTRUCTION AREA AND AFFECTING NEIGHBORING SITES, NATURAL AREAS, PUBLIC FACILITIES OR ANY OTHER AREA THAT MIGHT BE AFFECTED BY SEDIMENTATION. ALL MEASURES SHOWN ON THIS PLAN SHOULD BE CONSIDERED THE MINIMUM REQUIREMENTS NECESSARY. SHOULD FIELD CONDITIONS DICTATE ADDITIONAL MEASURES, SUCH MEASURES SHALL BE PER CALIFORNIA REGIONAL WATER QUALITY CONTROL BOARD'S FIELD MANUAL FOR EROSION AND SEDIMENTATION CONTROL AND THE CALIFORNIA STORM WATER QUALITY ASSOCIATION BEST MANAGEMENT PRACTICES HANDBOOK FOR CONSTRUCTION. LEA & BRAZE ENGINEERING SHOULD BE NOTIFIED IMMEDIATELY SHOULD CONDITIONS CHANGE.

EROSION CONTROL NOTES:

1. IT SHALL BE THE OWNER'S/CONTRACTOR'S RESPONSIBILITY TO MAINTAIN CONTROL OF THE ENTIRE CONSTRUCTION OPERATION AND TO KEEP THE ENTIRE SITE IN COMPLIANCE WITH THIS EROSION CONTROL PLAN.
2. THE INTENTION OF THIS PLAN IS FOR INTERIM EROSION AND SEDIMENT CONTROL ONLY. ALL EROSION CONTROL MEASURES SHALL CONFORM TO CALIFORNIA REGIONAL WATER QUALITY CONTROL BOARD'S FIELD MANUAL FOR EROSION AND SEDIMENTATION CONTROL, THE CALIFORNIA STORM WATER QUALITY ASSOCIATION BEST MANAGEMENT PRACTICES HANDBOOK FOR CONSTRUCTION, AND THE LOCAL GOVERNING AGENCY FOR THIS PROJECT.
3. OWNER/CONTRACTOR SHALL BE RESPONSIBLE FOR MONITORING EROSION AND SEDIMENT CONTROL MEASURES PRIOR TO, DURING, AND AFTER STORM EVENTS. PERSON IN CHARGE OF MAINTAINING EROSION CONTROL MEASURES SHOULD WATCH LOCAL WEATHER REPORTS AND ACT APPROPRIATELY TO MAKE SURE ALL NECESSARY MEASURES ARE IN PLACE.
4. SANITARY FACILITIES SHALL BE MAINTAINED ON THE SITE AT ALL TIMES.
5. DURING THE RAINY SEASON, ALL PAVED AREAS SHALL BE KEPT CLEAR OF EARTH MATERIAL AND DEBRIS. THE SITE SHALL BE MAINTAINED SO AS TO MINIMIZE SEDIMENT-LADEN RUNOFF TO ANY STORM DRAINAGE SYSTEM, INCLUDING EXISTING DRAINAGE SWALES AND WATERCOURSES.
6. CONSTRUCTION OPERATIONS SHALL BE CARRIED OUT IN SUCH A MANNER THAT EROSION AND WATER POLLUTION WILL BE MINIMIZED. COMPLIANCE WITH FEDERAL, STATE AND LOCAL LAWS CONCERNING POLLUTION SHALL BE MAINTAINED AT ALL TIMES.
7. CONTRACTOR SHALL PROVIDE DUST CONTROL AS REQUIRED BY THE APPROPRIATE FEDERAL, STATE AND LOCAL AGENCY REQUIREMENTS.
8. ALL MATERIALS NECESSARY FOR THE APPROVED EROSION CONTROL MEASURES SHALL BE IN PLACE BY OCTOBER 15TH.
9. EROSION CONTROL SYSTEMS SHALL BE INSTALLED AND MAINTAINED THROUGHOUT THE RAINY SEASON, OR FROM OCTOBER 15TH THROUGH APRIL 15TH, WHICHEVER IS LONGER.
10. IN THE EVENT OF RAIN, ALL GRADING WORK IS TO CEASE IMMEDIATELY AND THE SITE IS TO BE SEALED IN ACCORDANCE WITH THE APPROVAL EROSION CONTROL MEASURES AND APPROVED EROSION CONTROL PLAN.
11. THE CONTRACTOR SHALL BE RESPONSIBLE FOR CHECKING AND REPAIRING EROSION CONTROL SYSTEMS AFTER EACH STORM.
12. ADDITIONAL EROSION CONTROL MEASURES MAY BE REQUIRED BY LOCAL JURISDICTION'S ENGINEERING DEPARTMENT OR BUILDING OFFICIALS.
13. MEASURES SHALL BE TAKEN TO COLLECT OR CLEAN ANY ACCUMULATION OR DEPOSIT OF DIRT, MUD, SAND, ROCKS, GRAVEL OR DEBRIS ON THE SURFACE OF ANY STREET, ALLEY OR PUBLIC PLACE OR IN ANY PUBLIC STORM DRAIN SYSTEMS. THE REMOVAL OF AFORESAID SHALL BE DONE BY STREET SWEEPING OR HAND SWEEPING. WATER SHALL NOT BE USED TO WASH SEDIMENTS INTO PUBLIC OR PRIVATE DRAINAGE FACILITIES.
14. EROSION CONTROL MEASURES SHALL BE ON-SITE FROM SEPTEMBER 15TH THRU APRIL 15TH.
15. ALL EROSION CONTROL MEASURES SHALL BE INSTALLED AND MAINTAINED THROUGHOUT THE RAINY SEASON OR FROM OCTOBER 15 THRU APRIL 15, WHICHEVER IS GREATER.
16. PLANS SHALL BE DESIGNED TO MEET C3 REQUIREMENTS OF THE MUNICIPAL STORMWATER REGIONAL PERMIT("MRP") NPDES PERMIT CAS 612008.
17. THE CONTRACTOR TO NPDES (NATIONAL POLLUTION DISCHARGE ELIMINATION SYSTEM) BEST MANAGEMENT PRACTICES (BMP) FOR SEDIMENTATION PREVENTION AND EROSION CONTROL TO PREVENT DELETERIOUS MATERIALS OR POLLUTANTS FROM ENTERING THE TOWN OR COUNTY STORM DRAIN SYSTEMS.
18. THE CONTRACTOR MUST INSTALL ALL EROSION AND SEDIMENT CONTROL MEASURES PRIOR TO THE INCEPTION OF ANY WORK ONSITE AND MAINTAIN THE MEASURES UNTIL THE COMPLETION OF ALL LANDSCAPING.
19. THE CONTRACTOR SHALL MAINTAIN ADJACENT STREETS IN A NEAT, CLEAN DUST FREE AND SANITARY CONDITION AT ALL TIMES AND TO THE SATISFACTION OF THE TOWN INSPECTOR. THE ADJACENT STREET SHALL AT ALL TIMES BE KEPT CLEAN OF DEBRIS, WITH DUST AND OTHER NUISANCE BEING CONTROLLED AT ALL TIMES. THE CONTRACTOR BE RESPONSIBLE FOR ANY CLEAN UP ON ADJACENT STREETS AFFECTED BY THE BY THEIR CONSTRUCTION, METHOD OF STREET CLEANING SHALL BE BY DRY SWEEPING OF ALL PAVED AREAS. NO STOCKPILING OF BUILDING MATERIALS WITHIN THE TOWN RIGHT-OF-WAY.
20. SEDIMENTS AND OTHER MATERIALS SHALL NOT BE TRACKED FROM THE SITE BY VEHICLE TRAFFIC. THE CONTRACTOR SHALL INSTALL A STABILIZED CONSTRUCTION ENTRANCE PRIOR TO THE INSPECTION OF ANY WORK ONSITE AND MAINTAIN IT FOR THE DURATION OF THE CONSTRUCTION PROCESS SO AS TO NOT INHIBIT SEDIMENTS FROM BEING DEPOSITED INTO THE PUBLIC RIGHT-OF-WAY UNTIL THE COMPLETION OF ALL LANDSCAPING.
21. THE CONTRACTOR SHALL PROTECT DOWN SLOPE DRAINAGE COURSES, STREAMS AND STORM DRAINS WITH ROCK FILLED SAND BAGS, TEMPORARY SWALES, SILT FENCES, AND EARTH PERMS IN CONJUNCTION OF ALL LANDSCAPING.
22. STOCKPILED MATERIALS SHALL BE COVERED WITH VISQUEEN OR A TARPAULIN UNTIL THE MATERIAL IS REMOVED FROM THE SITE. ANY REMAINING BARE SOIL THAT EXISTS AFTER THE STOCKPILE HAS BEEN REMOVED SHALL BE COVERED UNTIL A NATURAL GROUND COVER IS ESTABLISHED OR IT IS SEEDED OR PLANTED TO PROVIDE GROUND COVER PRIOR TO THE FALL RAINY SEASON.
23. EXCESS OR WASTE CONCRETE MUST NOT BE WASHED INTO THE PUBLIC RIGHT-OF-WAYOR ANY OTHER DRAINAGE SYSTEM. PROVISIONS SHALL BE MADE TO RETAIN CONCRETE WASTES ON SITE UNTIL THEY CAN BE DISPOSED OF AS SOLID WASTE.
24. TRASH AND CONSTRUCTION RELATED SOLID WASTES MUST BE DEPOSITED INTO A COVERED RECEPTACLE TO PREVENT CONTAMINATION AND DISPERSAL BY WIND

EROSION CONTROL NOTES CONTINUED:

24. FUELS, OILS, SOLVENTS AND OTHER TOXIC MATERIALS MUST BE STORED IN ACCORDANCE WITH THEIR LISTING AND ARE NOT TO CONTAMINATE THE SOIL AND SURFACE WATERS. ALL APPROVED STORAGE CONTAINERS ARE TO BE PROTECTED FROM THE WEATHER. SPILLS MUST BE CLEANED UP IMMEDIATELY AND DISPOSED OF IN A PROPER MANNER. SPILLS MUST NOT BE WASHED INTO THE DRAINAGE SYSTEM,
25. DUST CONTROL SHALL BE DONE BY WATERING AND AS OFTEN AS REQUIRED BY THE TOWN INSPECTOR.
26. SILT FENCE(S) AND/OR FIBER ROLL(S) SHALL BE INSTALLED PRIOR TO SEPTEMBER 15TH AND SHALL REMAIN IN PLACE UNTIL THE LANDSCAPING GROUND COVER IS INSTALLED. CONTRACTOR SHALL CONTINUOUSLY MONITOR THESE MEASURES, FOLLOWING AND DURING ALL RAIN EVENTS,TO PUBLIC OWNED FACILITIES.

EROSION CONTROL MEASURES:

1. THE FACILITIES SHOWN ON THIS PLAN ARE DESIGNED TO CONTROL EROSION AND SEDIMENT DURING THE RAINY SEASON, OCTOBER 15TH TO APRIL 15. EROSION CONTROL FACILITIES SHALL BE IN PLACE PRIOR TO OCTOBER 15TH OF ANY YEAR. GRADING OPERATIONS DURING THE RAINY SEASON WHICH LEAVE DENUDED SLOPES SHALL BE PROTECTED WITH EROSION CONTROL MEASURES IMMEDIATELY FOLLOWING GRADING ON THE SLOPES.
2. SITE CONDITIONS AT TIME OF PLACEMENT OF EROSION CONTROL MEASURES WILL VARY. APPROPRIATE ACTION INCLUDING TEMPORARY SWALES, INLETS, HYDROSEEDING, STRAW BALES, ROCK SACKS, ETC. SHALL BE TAKEN TO PREVENT EROSION AND SEDIMENTATION FROM LEAVING SITE. EROSION CONTROL MEASURES SHALL BE ADJUSTED AS THE CONDITIONS CHANGE AND THE NEED OF CONSTRUCTION SHIFT.
3. CONSTRUCTION ENTRANCES SHALL BE INSTALLED PRIOR TO COMMENCEMENT OF GRADING. ALL CONSTRUCTION TRAFFIC ENTERING ONTO THE PAVED ROADS MUST CROSS THE STABILIZED CONSTRUCTION ENTRANCES. CONTRACTOR SHALL MAINTAIN STABILIZED ENTRANCE AT EACH VEHICLE ACCESS POINT TO EXISTING PAVED STREETS. ANY MUD OR DEBRIS TRACKED ONTO PUBLIC STREETS SHALL BE REMOVED DAILY AND AS REQUIRED BY THE GOVERNING AGENCY.
4. ALL EXPOSED SLOPES THAT ARE NOT VEGETATED SHALL BE HYDROSEEDED. IF HYDROSEEDING IS NOT USED OR IS NOT EFFECTIVE BY OCTOBER 15, THEN OTHER IMMEDIATE METHODS SHALL BE IMPLEMENTED, SUCH AS EROSION CONTROL BLANKETS, OR A THREE-STEP APPLICATION OF 1) SEED, MULCH, FERTILIZER 2) BLOWN STRAW 3) TACKIFIER AND MULCH. HYDROSEEDING SHALL BE IN ACCORDANCE WITH THE PROVISIONS OF SECTION 20" EROSION CONTROL AND HIGHWAY PLANTING" OF THE STANDARD SPECIFICATION OF THE STATE OF CALIFORNIA DEPARTMENT OF TRANSPORTATION, AS LAST REVISED. REFER TO THE EROSION CONTROL SECTION OF THE GRADING SPECIFICATIONS THAT ARE A PART OF THIS PLAN SET FOR FURTHER INFORMATION.
5. INLET PROTECTION SHALL BE INSTALLED AT OPEN INLETS TO PREVENT SEDIMENT FROM ENTERING THE STORM DRAIN SYSTEM. INLETS NOT USED IN CONJUNCTION WITH EROSION CONTROL ARE TO BE BLOCKED TO PREVENT ENTRY OF SEDIMENT. MINIMUM INLET PROTECTION SHALL CONSIST OF A ROCK SACKS OR AS SHOWN ON THIS PLAN
6. THIS EROSION AND SEDIMENT CONTROL PLAN MAY NOT COVER ALL THE SITUATIONS THAT MAY ARISE DURING CONSTRUCTION DUE TO UNANTICIPATED FIELD CONDITIONS. VARIATIONS AND ADDITIONS MAY BE MADE TO THIS PLAN IN THE FIELD. A REPRESENTATIVE OF LEA & BRAZE ENGINEERING SHALL PERFORM A FIELD REVIEW AND MAKE RECOMMENDATIONS AS NEEDED. CONTRACTOR IS RESPONSIBLE TO NOTIFY LEA & BRAZE ENGINEERING AND THE GOVERNING AGENCY OF ANY CHANGES.
7. THE EROSION CONTROL MEASURES SHALL CONFORM TO THE LOCAL JURISDICTION'S STANDARDS AND THE APPROVAL OF THE LOCAL JURISDICTION'S ENGINEERING DEPARTMENT.
8. STRAW ROLLS SHALL BE PLACED AT THE TOE OF SLOPES AND ALONG THE DOWN SLOPE PERIMETER OF THE PROJECT. THEY SHALL BE PLACED AT 25 FOOT INTERVALS ON GRADED SLOPES. PLACEMENT SHALL RUN WITH THE CONTOURS AND ROLLS SHALL BE TIGHTLY END BUTTED. CONTRACTOR SHALL REFER TO MANUFACTURES SPECIFICATIONS FOR PLACEMENT AND INSTALLATION INSTRUCTIONS.

REFERENCES:

1. CALIFORNIA REGIONAL WATER QUALITY CONTROL BOARD'S FIELD MANUAL FOR EROSION AND SEDIMENTATION CONTROL
2. CALIFORNIA STORM WATER QUALITY ASSOCIATION BEST MANAGEMENT PRACTICES HANDBOOK FOR CONSTRUCTION

PERIODIC MAINTENANCE:

1. MAINTENANCE IS TO BE PERFORMED AS FOLLOWS:
   - A. DAMAGES CAUSED BY SOIL EROSION OR CONSTRUCTION SHALL BE REPAIRED AT THE END OF EACH WORKING DAY.
   - B. SWALES SHALL BE INSPECTED PERIODICALLY AND MAINTAINED AS NEEDED.
   - C. SEDIMENT TRAPS, BERMS, AND SWALES ARE TO BE INSPECTED AFTER EACH STORM AND REPAIRS MADE AS NEEDED.
   - D. SEDIMENT SHALL BE REMOVED AND SEDIMENT TRAP RESTORED TO ITS ORIGINAL DIMENSIONS WHEN SEDIMENT HAS ACCUMULATED TO A DEPTH OF 1' FOOT.
   - E. SEDIMENT REMOVED FROM TRAP SHALL BE DEPOSITED IN A SUITABLE AREA AND IN SUCH A MANNER THAT IT WILL NOT ERODE.
   - F. RILLS AND GULLIES MUST BE REPAIRED.
2. GRAVEL BAG INLET PROTECTION SHALL BE CLEANED OUT WHENEVER SEDIMENT DEPTH IS ONE HALF THE HEIGHT OF ONE GRAVEL BAG.
3. STRAW ROLLS SHALL BE PERIODICALLY CHECKED TO ASSURE PROPER FUNCTION AND CLEANED OUT WHENEVER THE SEDIMENT DEPTH REACHED HALF THE HEIGHT OF THE ROLL.
4. SILT FENCE SHALL BE PERIODICALLY CHECKED TO ASSURE PROPER FUNCTION AND CLEANED OUT WHENEVER THE SEDIMENT DEPTH REACHES ONE FOOT IN HEIGHT.
5. CONSTRUCTION ENTRANCE SHALL BE REGRAVELED AS NECESSARY FOLLOWING SILT/SOIL BUILDUP.
6. ANY OTHER EROSION CONTROL MEASURES SHOULD BE CHECKED AT REGULAR INTERVALS TO ASSURE PROPER FUNCTION

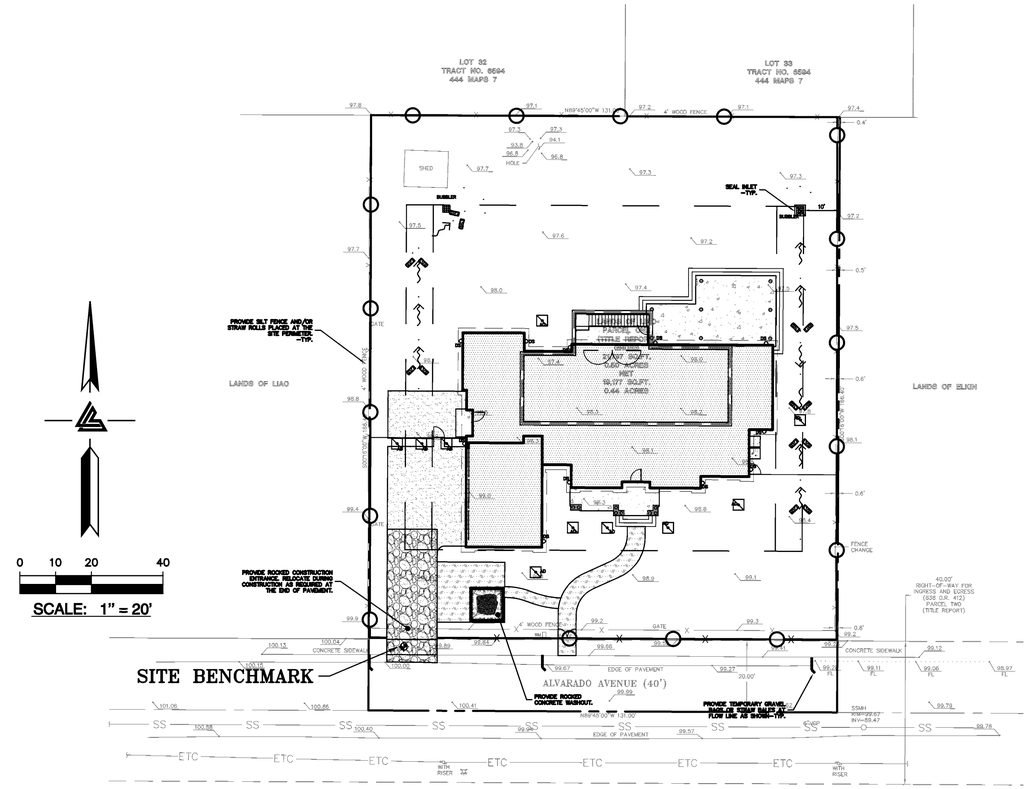

EROSION CONTROL LEGEND

- GRAVEL BAG
- SEDIMENTATION BASIN
- INLET PROTECTION
- STRAW ROLL
- SILT FENCE
- CONCRETE WASHOUT
- CONSTRUCTION ENTRANCE
- TREE PROTECTION
- EROSION CONTROL BLANKET / MATTING

NOTE:
SEAL ALL OTHER INLETS NOT INTENDED TO ACCEPT STORM WATER AND DIRECT FLOWS TEMPORARILY TO FUNCTIONAL SEDIMENTATION BASIN INLETS. -TYP

REGISTERED PROFESSIONAL ENGINEER
PETER CARLINO
No. C79555
CIVIL
STATE OF CALIFORNIA
ORIGINAL SIGNATURES IN BLUE INK

LEA & BRAZE ENGINEERING, INC.
CIVIL ENGINEERS • LAND SURVEYORS
BAY AREA REGION
2495 INDUSTRIAL PKWY WEST
HAYWARD, CALIFORNIA 94545
(P) (510) 887-4086
(F) (510) 887-3019
SACRAMENTO REGION
3017 DOUGLAS BLVD. # 300
ROSEVILLE, CA 95661
(P) (916)966-1338
(F) (916)797-7363
WWW.LEABRAZE.COM

LIAO RESIDENCE
181 ALVARADO AVENUE
LOS ALTOS, CALIFORNIA
SANTA CLARA COUNTY
APN: 167-29-058

EROSION CONTROL PLAN

REVISIONS	BY
–	–
–	–
–	–
–	–
–	–

JOB NO:	2150310
DATE:	XX-XX-XX
SCALE:	1" = 20'
DESIGN BY:	RB
DRAWN BY:	WA
SHEET NO:	ER-1

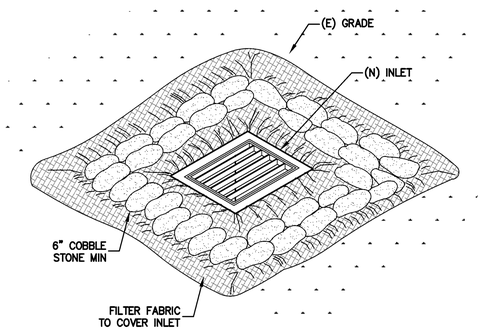

1 ER-2 **INLET PROTECTION**
NTS

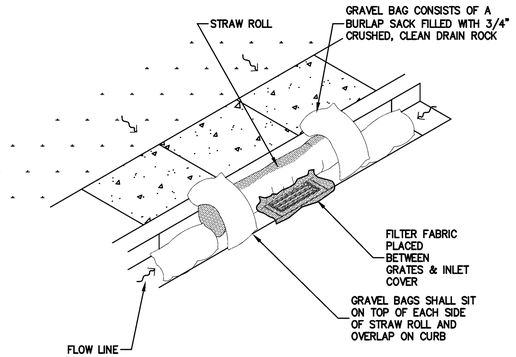

2 ER-2 **STREET INLET PROTECTION**
NTS

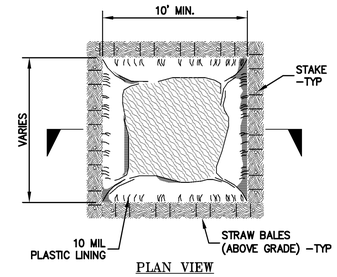

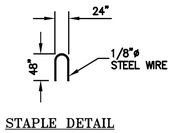

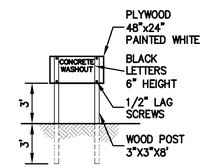

NOTES:
ACTUAL LAYOUT DETERMINED IN FIELD.

THE CONCRETE WASHOUT SIGN SHALL BE INSTALLED WITHIN 10' OF THE TEMPORARY CONCRETE WASHOUT FACILITY.

3 ER-2 **CONCRETE WASHOUT**
NTS

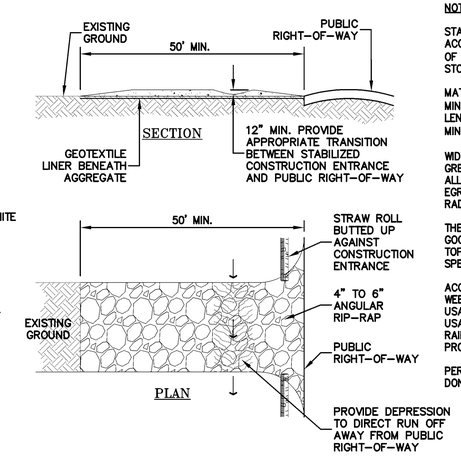

NOTES:

STABILIZED CONSTRUCTION SITE ACCESS SHALL BE CONSTRUCTED OF 3" TO 4" WASHED, FRACTURED STONE AGGREGATE.

MATERIAL SHALL BE PLACED TO A MINIMUM THICKNESS OF 12". LENGTH OF ENTRANCE SHALL BE A MINIMUM OF 50'.

WIDTH SHALL BE A MIN. OF 15' OR GREATER IF NECESSARY TO COVER ALL VEHICULAR INGRESS AND EGRESS. PROVIDE AMPLE TURNING RADII.

THE ENTRANCE SHALL BE KEPT IN GOOD CONDITION BY OCCASIONAL TOP DRESSING WITH MATERIAL AS SPECIFIED IN ABOVE NOTE.

ACCESSES SHALL BE INSPECTED WEEKLY DURING PERIODS OF HEAVY USAGE, MONTHLY DURING NORMAL USAGE, AND AFTER EACH RAINFALL WITH MAINTENANCE PROVIDED AS NECESSARY.

PERIODIC TOP DRESSING SHALL BE DONE AS NEEDED.

4 ER-2 **CONSTRUCTION ENTRANCE**
NTS

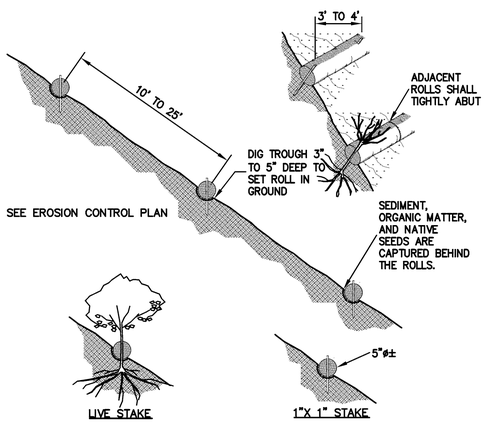

NOTE:
1. STRAW ROLL INSTALLATION REQUIRES THE PLACEMENT AND SECURE STAKING OF THE ROLL IN A TRENCH, 3" TO 5" DEEP, DUG ON CONTOUR. RUNOFF MUST NOT BE ALLOWED TO RUN UNDER OR AROUND ROLL.
2. CONTRACTOR IS RESPONSIBLE FOR REGULAR MAINTENANCE AND INSPECTION. THE SILT SHALL BE CLEANED OUT WHEN IT REACHES HALF THE HEIGHT OF THE ROLL.

5 ER-2 **STRAW ROLLS**
NTS

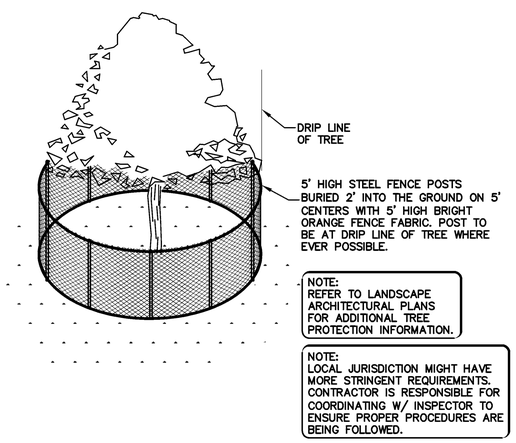

6 ER-2 **EXISTING TREE PROTECTION DETAIL**
NTS

REGISTERED PROFESSIONAL ENGINEER
PETER CARLINO
No. C79555
CIVIL
STATE OF CALIFORNIA
ORIGINAL SIGNATURES IN BLUE INK

LEA & BRAZE ENGINEERING, INC.
CIVIL ENGINEERS • LAND SURVEYORS
BAY AREA REGION
2495 INDUSTRIAL PKWY WEST
HAYWARD, CALIFORNIA 94545
(P) (510) 887-4086
(F) (510) 887-3019
SACRAMENTO REGION
3017 DOUGLAS BLVD. # 300
ROSEVILLE, CA 95661
(P) (916)966-1338
(F) (916)797-7363
WWW.LEABRAZE.COM

LIAO RESIDENCE
181 ALVARADO AVENUE
LOS ALTOS, CALIFORNIA
SANTA CLARA COUNTY
APN: 167-29-058

EROSION CONTROL DETAILS

REVISIONS	BY
–	–
–	–
–	–
–	–
–	–

JOB NO:	2150310
DATE:	XX-XX-XX
SCALE:	NTS
DESIGN BY:	RB
DRAWN BY:	WA
SHEET NO:	ER-2

06 OF 07 SHEETS

Heavy Equipment Operation

Best Management Practices for the Construction Industry

Doing the Job Right

Site Planning and Preventive Vehicle Maintenance

- ❑ Maintain all vehicles and heavy equipment. Inspect frequently for and repair leaks.
- ❑ Perform major maintenance, repair jobs, and vehicle and equipment washing off site where cleanup is easier.
- ❑ If you must drain and replace motor oil, radiator coolant, or other fluids on site, use drip pans or drop cloths to catch drips and spills. Collect all spent fluids, store in separate containers, and properly dispose as hazardous waste (recycle whenever possible).
- ❑ Do not use diesel oil to lubricate equipment parts, or clean equipment. Use only water for any onsite cleaning.
- ❑ Cover exposed fifth wheel hitches and other oily or greasy equipment during rain events.

Spill Cleanup

- ❑ Clean up spills immediately when they happen.
- ❑ Never hose down "dirty" pavement or impermeable surfaces where fluids have spilled. Use dry cleanup methods (absorbent materials, cat litter, and/or rags) whenever possible and properly dispose of absorbent materials.
- ❑ Sweep up spilled dry materials immediately. Never attempt to "wash them away" with water, or bury them.
- ❑ Use as little water as possible for dust control. Ensure water used doesn't leave silt or discharge to storm drains.
- ❑ Clean up spills on dirt areas by digging up and properly disposing of contaminated soil.
- ❑ Report significant spills to the appropriate local spill response agencies immediately.
- ❑ If the spill poses a significant hazard to human health and safety, property or the environment, you must also report it to the State Office of Emergency Services.

Best Management Practices for the

- Vehicle and equipment operators
- Site supervisors
- General contractors
- Home builders
- Developers

Storm water Pollution from Heavy Equipment on Construction Sites

Poorly maintained vehicles and heavy equipment that leak fuel, oil, antifreeze or other fluids on the construction site are common sources of storm drain pollution. Prevent spills and leaks by isolating equipment from runoff channels, and by watching for leaks and other maintenance problems. Remove construction equipment from the site as soon as possible.

Roadwork and Paving

Best Management Practices for the Construction Industry

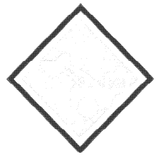

Best Management Practices for the

- Road crews
- Driveway/sidewalk/parking lot construction crews
- Seal coat contractors
- Operators of grading equipment, paving machines, dump trucks, concrete mixers
- Construction inspectors
- General contractors
- Home builders
- Developers

Doing The Job Right

General Business Practices

- ❑ Develop and implement erosion/sediment control plans for roadway embankments.
- ❑ Schedule excavation and grading work during dry weather.
- ❑ Check for and repair leaking equipment.
- ❑ Perform major equipment repairs at designated areas in your maintenance yard, where cleanup is easier. Avoid performing equipment repairs at construction sites.
- ❑ When refueling or when vehicle/equipment maintenance must be done on site, designate a location away from storm drains and creeks.
- ❑ Do not use diesel oil to lubricate equipment parts or clean equipment.
- ❑ Recycle used oil, concrete, broken asphalt, etc. whenever possible, or dispose of properly.

During Construction

- ❑ Avoid paving and seal coating in wet weather, or when rain is forecast, to prevent fresh materials from contacting stormwater runoff.
- ❑ Cover and seal catch basins and manholes when applying seal coat, slurry seal, fog seal, or similar materials.
- ❑ Protect drainage ways by using earth dikes, sand bags, or other controls to divert or trap and filter runoff.

Storm Drain Pollution from Roadwork

Road paving, surfacing, and pavement removal happen right in the street, where there are numerous opportunities for asphalt, saw-cut slurry, or excavated material to illegally enter storm drains. Extra planning is required to store and dispose of materials properly and guard against pollution of storm drains, creeks, and the Bay.

- ❑ Never wash excess material from exposed- aggregate concrete or similar treatments into a street or storm drain. Collect and recycle, or dispose to dirt area.
- ❑ Cover stockpiles (asphalt, sand, etc.) and other construction materials with plastic tarps. Protect from rainfall and prevent runoff with temporary roofs or plastic sheets and berms.
- ❑ Park paving machines over drip pans or absorbent material (cloth, rags, etc.) to catch drips when not in use.
- ❑ Clean up all spills and leaks using "dry" methods (with absorbent materials and/or rags), or dig up, remove, and properly dispose of contaminated soil.
- ❑ Collect and recycle or appropriately dispose of excess abrasive gravel or sand.
- ❑ Avoid over-application by water trucks for dust control.

Asphalt/Concrete Removal

- ❑ Avoid creating excess dust when breaking asphalt or concrete.
- ❑ After breaking up old pavement, be sure to remove all chunks and pieces. Make sure broken pavement does not come in contact with rainfall or runoff.
- ❑ When making saw cuts, use as little water as possible. Shovel or vacuum saw-cut slurry and remove from the site. Cover or protect storm drain inlets during saw-cutting. Sweep up, and properly dispose of, all residues.
- ❑ Sweep, never hose down streets to clean up tracked dirt. Use a street sweeper or vacuum truck. Do not dump vacuumed liquor in storm drains.

Fresh Concrete and Mortar Application

Best Management Practices for the Construction Industry

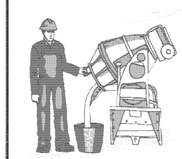

Best Management Practices for the

- Masons and bricklayers
- Sidewalk construction crews
- Patio construction workers
- Construction inspectors
- General contractors
- Home builders
- Developers
- Concrete delivery/pumping workers

Doing The Job Right

General Business Practices

- ❑ Wash out concrete mixers only in designated wash-out areas in your yard, away from storm drains and waterways, where the water will flow into a temporary waste pit in a dirt area. Let water percolate through soil and dispose of settled, hardened concrete as garbage. Whenever possible, recycle washout by pumping back into mixers for reuse.
- ❑ Wash out chutes onto dirt areas at site that do not flow to streets or drains.
- ❑ Always store both dry and wet materials under cover, protected from rainfall and runoff and away from storm drains or waterways. Protect dry materials from wind.
- ❑ Secure bags of cement after they are open. Be sure to keep wind-blown cement powder away from streets, gutters, storm drains, rainfall, and runoff.
- ❑ Do not use diesel fuel as a lubricant on concrete forms, tools, or trailers.

During Construction

- ❑ Don't mix up more fresh concrete or cement than you will use in a two-hour period.
- ❑ Set up and operate small mixers on tarps or heavy plastic drop cloths.
- ❑ When cleaning up after driveway or sidewalk construction, wash fines onto dirt areas, not down the driveway or into the street or storm drain.
- ❑ Protect applications of fresh concrete and mortar from rainfall and runoff until the material has dried.
- ❑ Wash down exposed aggregate concrete only when the wash water can (1) flow onto a dirt area; (2) drain onto a bermed surface from which it can be pumped and disposed of properly, or (3) be vacuumed from a catchment created by blocking a storm drain inlet. If necessary, divert runoff with temporary berms. Make sure runoff does not reach gutters or storm drains.
- ❑ When breaking up pavement, be sure to pick up all the pieces and dispose of properly. Recycle large chunks of broken concrete at a landfill.
- ❑ Never bury waste material. Dispose of small amounts of excess dry concrete, grout, and mortar in the trash.
- ❑ Never dispose of washout into the street, storm drains, drainage ditches, or streams.

Storm Drain Pollution from Fresh Concrete and Mortar Applications

Fresh concrete and cement-related mortars that wash into lakes, streams, or estuaries are toxic to fish and the aquatic environment. Disposing of these materials to the storm drains or creeks can block storm drains, causes serious problems, and is prohibited by law.

Preventing Pollution: It's Up to Us

In the Santa Clara Valley, storm drains transport water directly to local creeks and San Francisco Bay without treatment. Storm water pollution is a serious problem for wildlife dependent on our waterways and for the people who live near polluted streams or bay lands. Some common sources of this pollution include spilled oil, fuel, and fluids from vehicles and heavy equipment; construction debris; sediment created by erosion; landscaping runoff containing pesticides or weed killers; and materials such as used motor oil, antifreeze, and paint products that people pour or spill into a street or storm drain.

Thirteen valley municipalities have joined together with Santa Clara County and the Santa Clara Valley Water District to educate local residents and businesses and fight storm water pollution. TO comply with this program, contractors most comply with the practices described this drawing sheet.

Spill Response Agencies

DIAL 9-1-1

State Office of Emergency Services Warning Center (24 hours): **800-852-7550**

Santa Clara County Environmental Health Services: (408) 299-6930

Local Pollution Control Agencies

County of Santa Clara Pollution Prevention Program: (408) 441-1195

County of Santa Clara Integrated Waste Management Program: (408) 441-1198

County of Santa Clara District Attorney Environmental Crimes Hotline: (408) 299-TIPS

Santa Clara County Recycling Hotline: 1-800-533-8414

Santa Clara Valley Water District: (408) 265-2600

Santa Clara Valley Water District Pollution Hotline: 1-888-510-5151

Regional Water Quality Control Board San Francisco Bay Region: (510) 622-2300

Palo Alto Regional Water Quality Control Plant: (650) 329-2598
Serving East Palo Alto Sanitary District, Los Altos, Los Altos Hills, Mountain View, Palo Alto, Stanford

City of Los Altos

Building Department: (650) 947-2752

Engineering Department: (650) 947-2780

Landscaping, Gardening, and Pool Maintenance

Best Management Practices for the Construction Industry

Best Management Practices for the

- Landscapers
- Gardeners
- Swimming pool/spa service and repair workers
- General contractors
- Home builders
- Developers
- Homeowners

Doing The Right Job

General Business Practices

- ❑ Protect stockpiles and landscaping materials from wind and rain by storing them under tarps or secured plastic sheeting.
- ❑ Store pesticides, fertilizers, and other chemicals indoors or in a shed or storage cabinet.
- ❑ Schedule grading and excavation projects during dry weather.
- ❑ Use temporary check dams or ditches to divert runoff away from storm drains.
- ❑ Protect storm drains with sandbags or other sediment controls.
- ❑ Re-vegetation is an excellent form of erosion control for any site.

Landscaping/Garden Maintenance

- ❑ Use pesticides sparingly, according to instructions on the label. Rinse empty containers, and use rinse water as product. Dispose of rinsed, empty containers in the trash. Dispose of unused pesticides as hazardous waste.
- ❑ Collect lawn and garden clippings, pruning waste, and tree trimmings. Chip if necessary, and compost.
- ❑ In communities with curbside pick-up of yard waste, place clippings and pruning waste at the curb in approved bags or containers. Or, take to a landfill that composts yard waste. No curbside pickup of yard waste is available for commercial properties.
- ❑ Do not blow or rake leaves, etc. into the street, or place yard waste in gutters or on dirt shoulders, unless you are piling them for recycling (allowed by San Jose and unincorporated County only). Sweep up any leaves, litter or residue in gutters or on street.
- ❑ In San Jose, leave yard waste for curbside recycling pickup in piles in the street, 18 inches from the curb and completely out of the flow line to any storm drain.

Pool/Fountain/Spa Maintenance

Draining Pools Or Spas

When it's time to drain a pool, spa, or fountain, please be sure to call your local wastewater treatment plant before you start for further guidance on flow rate restrictions, backflow prevention, and handling special cleaning waste (such as acid wash). Discharge flows shall not exceed 100 gallon per minute.

- ❑ Never discharge pool or spa water to a street or storm drain; discharge to a sanitary sewer cleanout.
- ❑ If possible, when emptying a pool or spa, let chlorine dissipate for a few days and then recycle/reuse water by draining it gradually onto a landscaped area.
- ❑ Do not use copper-based algaecides. Control algae with chlorine or other alternatives, such as sodium bromide.

Filter Cleaning

- ❑ Never clean a filter in the street or near a storm drain. Rinse cartridge and diatomaceous earth filters onto a dirt area, and spade filter residue into soil. Dispose of spent diatomaceous earth in the garbage.
- ❑ If there is no suitable dirt area, call your local wastewater treatment plant for instructions on discharging filter backwash or rinse water to the sanitary sewer.

Storm Drain Pollution From Landscaping and Swimming Pool Maintenance

Many landscaping activities expose soils and increase the likelihood that earth and garden chemicals will run off into the storm drains during irrigation or when it rains. Swimming pool water containing chlorine and copper-based algaecides should never be discharged to storm drains. These chemicals are toxic to aquatic life.

Painting and Application of Solvents and Adhesives

Best Management Practices for the Construction Industry

Best Management Practices for the

- Homeowners
- Painters
- Paperhangers
- Plasterers
- Graphic artists
- Dry wall crews
- Floor covering installers
- General contractors
- Home builders
- Developers

Doing The Job Right

Handling Paint Products

- ❑ **Keep all liquid paint products and wastes away from the gutter, street, and storm drains.** Liquid residues from paints, thinners, solvents, glues, and cleaning fluids are hazardous wastes and must be disposed of at a hazardous waste collection facility (contact your local stormwater program listed on the back of this brochure).
- ❑ When thoroughly dry, empty paint cans, used brushes, rags, and drop cloths may be disposed of as garbage in a sanitary landfill. Empty, dry paint cans also may be recycled as metal.
- ❑ Wash water from painted buildings constructed before 1978 can contain high amounts of lead, even if paint chips are not present. Before you begin stripping paint or cleaning pre-1978 building exteriors with water under high pressure, test paint for lead by taking paint scrapings to a local laboratory. See Yellow Pages for a state-certified laboratory.
- ❑ If there is loose paint on the building, or if the paint tests positive for lead, block storm drains. Check with the wastewater treatment plant to determine whether you may discharge water to the sanitary sewer, or if you must send it offsite for disposal as hazardous waste.

Storm Drain Pollution from Paints, Solvents, and Adhesives

All paints, solvents, and adhesives contain chemicals that are harmful to wildlife in local creeks, San Francisco Bay, and the Pacific Ocean. Toxic chemicals may come from liquid or solid products or from cleaning residues or rags. Paint material and wastes, adhesives and cleaning fluids should be recycled when possible, or disposed of properly to prevent these materials from flowing into storm drains and watercourses.

Painting Cleanup

- ❑ **Never clean brushes or rinse paint containers into a street, gutter, storm drain, French drain, or stream.**
- ❑ For **water-based paints**, paint out brushes to the extent possible, and rinse into a drain that goes to the sanitary sewer. Never pour paint down a storm drain.
- ❑ For **oil-based paints**, paint out brushes to the extent possible and clean with thinner or solvent in a proper container. Filter and reuse thinners and solvents. Dispose of excess liquids and residue as hazardous waste.

Paint Removal

- ❑ Paint chips and dust from non-hazardous dry stripping and sand blasting may be swept up or collected in plastic drop cloths and disposed of as trash.
- ❑ Chemical paint stripping residue and chips and dust from marine paints or paints containing lead, mercury or tributyl tin must be disposed of as hazardous wastes. Lead based paint removal requires a state-certified contractor.
- ❑ When stripping or cleaning building exteriors with high-pressure water, block storm drains. Direct wash water onto a dirt area and spade into soil. Or, check with the local wastewater treatment authority to find out if you can collect (mop or vacuum) building cleaning water and dispose to the sanitary sewer. Sampling of the water may be required to assist the wastewater treatment authority in making its decision.

Recycle/Reuse Leftover Paints Whenever Possible

- ❑ Recycle or donate excess **water-based (latex) paint**, or return to supplier.
- ❑ Reuse leftover **oil-based paint**. Dispose of non-recyclable thinners, sludge and unwanted paint, as hazardous waste.
- ❑ Unopened cans of paint may be able to be returned to the paint vendor. Check with the vendor regarding its "buy-back" policy.

Los Altos Municipal Code Requirements

Los Altos Municipal Code Chapter 10.08.390 Non-storm water discharges

A. Unlawful discharges. It shall be unlawful to discharge any domestic waste or industrial waste into storm drains, gutters, creeks, or San Francisco Bay. Unlawful discharges to storm drains shall include, but not be limited to, discharge from toilets; sinks; industrial processes; cooling systems; boilers; fabric cleaning; equipment cleaning; vehicle cleaning; construction activities, including, but not limited to, painting, paving, concrete placement, saw cutting and grading; swimming pools, spas, and fountains, unless specifically permitted by a discharge permit or unless exempted pursuant to guidelines published by the superintendent.

B. Threatened discharges. It shall be unlawful to cause hazardous materials, domestic waste, or industrial waste to be deposited in such a manner or location as to constitute a threatened discharge into storm drains, gutters, creeks or San Francisco Bay. A "threatened discharge" is a condition creating a substantial probability of harm, when the probability and potential extent of harm make it reasonably necessary to take immediate action to prevent, reduce or mitigate damages to persons, property or natural resources. Domestic or industrial wastes that are no longer contained in a pipe, tank or other container are considered to be threatened discharges unless they are actively being cleaned up.

Los Altos Municipal Code Section 10.08.430 Requirements for construction operations.

A. A spill response plan for hazardous waste, hazardous materials and uncontained construction materials shall be prepared and available at the construction sites for all projects where the proposed construction site is equal to or greater than one acre of disturbed soil and for any other projects for which the city engineer determines is necessary to protect surface waters. Preparation of the plan shall be in accordance with guidelines published by the city engineer.

B. A storm water pollution prevention plan shall be prepared and available at the construction sites for all projects greater than one acre of disturbed soil and for any other projects for which the city engineer determines that a storm water management plan is necessary to protect surface waters. Preparation of the plan shall be in accordance with guidelines published by the city engineer.

C. Prior approval shall be obtained from the city engineer or designee to discharge water pumped from construction sites to the storm drain. The city engineer or designee may require gravity settling and filtration upon a determination that either or both would improve the water quality of the discharge. Contaminated groundwater or water that exceeds state or federal requirements for discharge to navigable waters may not be discharged to the storm drain. Such water may be discharged to the sewer, provided that the requirements of Section 10.08.240 are met and the approval of the superintendent is obtained prior to discharge.

D. No cleanup of construction debris from the streets shall result in the discharge of water to the storm drain system; nor shall any construction debris be deposited or allowed to be deposited in the storm drain system. (Prior code § 5-5.643)

Criminal and judicial penalties can be assessed for non-compliance.

General Construction And Site Supervision

Best Management Practices For Construction

Best Management Practices for the

- General contractors
- Site supervisors
- Inspectors
- Home builders
- Developers

Storm Drain Pollution from Construction Activities

Construction sites are common sources of storm water pollution. Materials and wastes that blow or wash into a storm drain, gutter, or street have a direct impact on local creeks and the Bay.

As a contractor, or site supervisor, owner or operator of a site, you may be responsible for any environmental damage caused by your subcontractors or employees.

Doing The Job Right

General Principals

- ❑ Keep an orderly site and ensure good housekeeping practices are used.
- ❑ Maintain equipment properly.
- ❑ Cover materials when they are not in use.
- ❑ Keep materials away from streets, storm drains and drainage channels.
- ❑ Ensure dust control water doesn't leave site or discharge to storm drains.

Advance Planning To Prevent Pollution

- ❑ Schedule excavation and grading activities for dry weather periods. To reduce soil erosion, plant temporary vegetation or place other erosion controls before rain begins. Use the *Erosion and Sediment Control Manual*, available from the Regional Water Quality Control Board, as a reference.
- ❑ Control the amount of runoff crossing your site (especially during excavation!) by using berms or temporary or permanent drainage ditches to divert water flow around the site. Reduce storm water runoff velocities by constructing temporary check dams or berms where appropriate.
- ❑ Train your employees and subcontractors. Make these best management practices available to everyone who works on the construction site. Inform subcontractors about the storm water requirements and their own responsibilities.

Good Housekeeping Practices

- ❑ Designate one area of the site for auto parking, vehicle refueling, and routine equipment maintenance. The designated area should be well away from streams or storm drain inlets, bermed if necessary. Make major repairs off site.
- ❑ Keep materials out of the rain – prevent runoff contamination at the source. Cover exposed piles of soil or construction materials with plastic sheeting or temporary roofs. Before it rains, sweep and remove materials from surfaces that drain to storm drains, creeks, or channels.
- ❑ Keep pollutants off exposed surfaces. Place trashcans and recycling receptacles around the site to minimize litter.
- ❑ Clean up leaks, drips and other spills immediately so they do not contaminate soil or groundwater or leave residue on paved surfaces. Use dry cleanup methods whenever possible. If you must use water, use just enough to keep the dust down.
- ❑ Cover and maintain dumpsters. Check frequently for leaks. Place dumpsters under roofs or cover with tarps or plastic sheeting secured around the outside of the dumpster. Never clean out a dumpster by hosing it down on the construction site.
- ❑ Set portable toilets away from storm drains. Make sure portable toilets are in good working order. Check frequently for leaks.

Materials/Waste Handling

- ❑ Practice Source Reduction -- minimize waste when you order materials. Order only the amount you need to finish the job.
- ❑ Use recyclable materials whenever possible. Arrange for pick-up of recyclable materials such as concrete, asphalt, scrap metal, solvents, degreasers, cleared vegetation, paper, rock, and vehicle maintenance materials such as used oil, antifreeze, batteries, and tires.
- ❑ Dispose of all wastes properly. Many construction materials and wastes, including solvents, water-based paints, vehicle fluids, broken asphalt and concrete, wood, and cleared vegetation can be recycled. Materials that cannot be recycled must be taken to an appropriate landfill or disposed of as hazardous waste. Never bury waste materials or leave them in the street or near a creek or stream bed.

Permits

- ❑ In addition to local building permits, you will need to obtain coverage under the State's General Construction Activity Storm water Permit if your construction site disturbs one acre or more. Obtain information from the Regional Water Quality Control Board.

Earth-Moving And Dewatering Activities

Best Management Practices for the Construction Industry

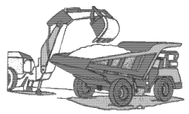

Best Management Practices for the

- Bulldozer, back hoe, and grading machine operators
- Dump truck drivers
- Site supervisors
- General contractors
- Home builders
- Developers

Doing The Job Right

General Business Practices

- ❑ Schedule excavation and grading work during dry weather.
- ❑ Perform major equipment repairs away from the job site.
- ❑ When refueling or vehicle/equipment maintenance must be done on site, designate a location away from storm drains.
- ❑ Do not use diesel oil to lubricate equipment parts, or clean equipment.

Practices During Construction

- ❑ Remove existing vegetation only when absolutely necessary. Plant temporary vegetation for erosion control on slopes or where construction is not immediately planned.
- ❑ Protect down slope drainage courses, streams, and storm drains with wattles, or temporary drainage swales. Use check dams or ditches to divert runoff around excavations. Refer to the Regional Water Quality Control Board's *Erosion and Sediment Control Field Manual* for proper erosion and sediment control measures.

Storm Drain Pollution from Earth-Moving Activities and Dewatering

Soil excavation and grading operations loosen large amounts of soil that can flow or blow into storm drains when handled improperly. Sediments in runoff can clog storm drains, smother aquatic life, and destroy habitats in creeks and the Bay. Effective erosion control practices reduce the amount of runoff crossing a site *and* slow the flow with check dams or roughened ground surfaces.

Contaminated groundwater is a common problem in the Santa Clara Valley. Depending on soil types and site history, groundwater pumped from construction sites may be contaminated with toxics (such as oil or solvents) or laden with sediments. Any of these pollutants can harm wildlife in creeks or the Bay, or interfere with wastewater treatment plant operation.

Discharging sediment-laden water from a dewatering site into any water of the state without treatment is prohibited.

- ❑ Cover stockpiles and excavated soil with secured tarps or plastic sheeting.

Dewatering Operations

1. *Check for Toxic Pollutants*

- ❑ Check for odors, discoloration, or an oily sheen on groundwater.
- ❑ Call your local wastewater treatment agency and ask whether the groundwater must be tested.
- ❑ If contamination is suspected, have the water tested by a certified laboratory.
- ❑ Depending on the test results, you may be allowed to discharge pumped groundwater to the storm drain (if no sediments present) or sanitary sewer. OR, you may be required to collect and haul pumped groundwater offsite for treatment and disposal at an appropriate treatment facility.

2. *Check for Sediment Levels*

- ❑ If the water is clear, the pumping time is less than 24 hours, and the flow rate is less than 20 gallons per minute, you may pump water to the street or storm drain.
- ❑ If the pumping time is more than 24 hours and the flow rate greater than 20 gpm, call your local wastewater treatment plant for guidance.
- ❑ If the water is not clear, solids must be filtered or settled out by pumping to a settling tank prior to discharge. Options for filtering include:
  - Pumping through a perforated pipe sunk part way into a small pit filled with gravel.
  - Pumping from a bucket placed below water level using a submersible pump;
  - Pumping through a filtering device such as a swimming pool filter or filter fabric wrapped around end of suction pipe.
- ❑ When discharging to a storm drain, protect the inlet using a barrier of burlap bags filled with drain rock, or cover inlet with filter fabric anchored under the grate. OR pump water through a grassy swale prior to discharge.

Blueprint for a Clean Bay

Remember: The property owner and the contractor share ultimate responsibility for the activities that occur on a construction site.
You may be held responsible for any environmental damage caused by your subcontractors or employees.

Best Management Practices for the Construction Industry

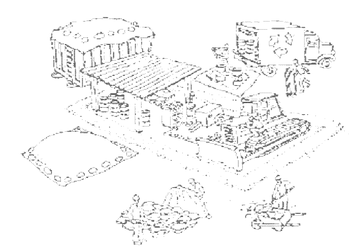

Santa Clara Urban Runoff Pollution Prevention Program

DESIGNED BY: LARRY LIND	APPROVED BY: CITY OF LOS ALTOS	DATE: OCTOBER, 2003
DRAWN BY: VICTOR CHEN	CITY ENGINEER 48056 R.C.E.	SCALE: N.T.S.
CHECKED BY: JIM GUSTAFSON	SHEET OF SHEETS	DRAWING NO:

REGISTERED PROFESSIONAL ENGINEER — PETER CARLINO — No. C79555 — CIVIL — STATE OF CALIFORNIA — ORIGINAL SIGNATURES IN BLUE INK

LEA & BRAZE ENGINEERING, INC.
CIVIL ENGINEERS • LAND SURVEYORS
BAY AREA REGION
2495 INDUSTRIAL PKWY WEST
HAYWARD, CALIFORNIA 94545
(P) (510) 887-4086
(F) (510) 887-3019
SACRAMENTO REGION
3017 DOUGLAS BLVD., # 300
ROSEVILLE, CA 95661
(P) (916)966-1338
(F) (916) 797-7363
WWW.LEABRAZE.COM

LIAO RESIDENCE
181 ALVARADO AVENUE
LOS ALTOS, CALIFORNIA
SANTA CLARA COUNTY
APN: 167-29-058

BLUEPRINT FOR A CLEAN BAY

REVISIONS	BY
–	–
–	–
–	–
–	–
–	–

JOB NO:	2150310
DATE:	XX-XX-XX
SCALE:	NO SCALE
DESIGN BY:	RB
DRAWN BY:	WA
SHEET NO:	ER-3

07 OF 07 SHEETS