# TWO STORY ADDITION & REMODEL FOR

# ARTHUR WENG
# AMY WENG

## 958 CLINTON ROAD
## LOS ALTOS, CA 94024

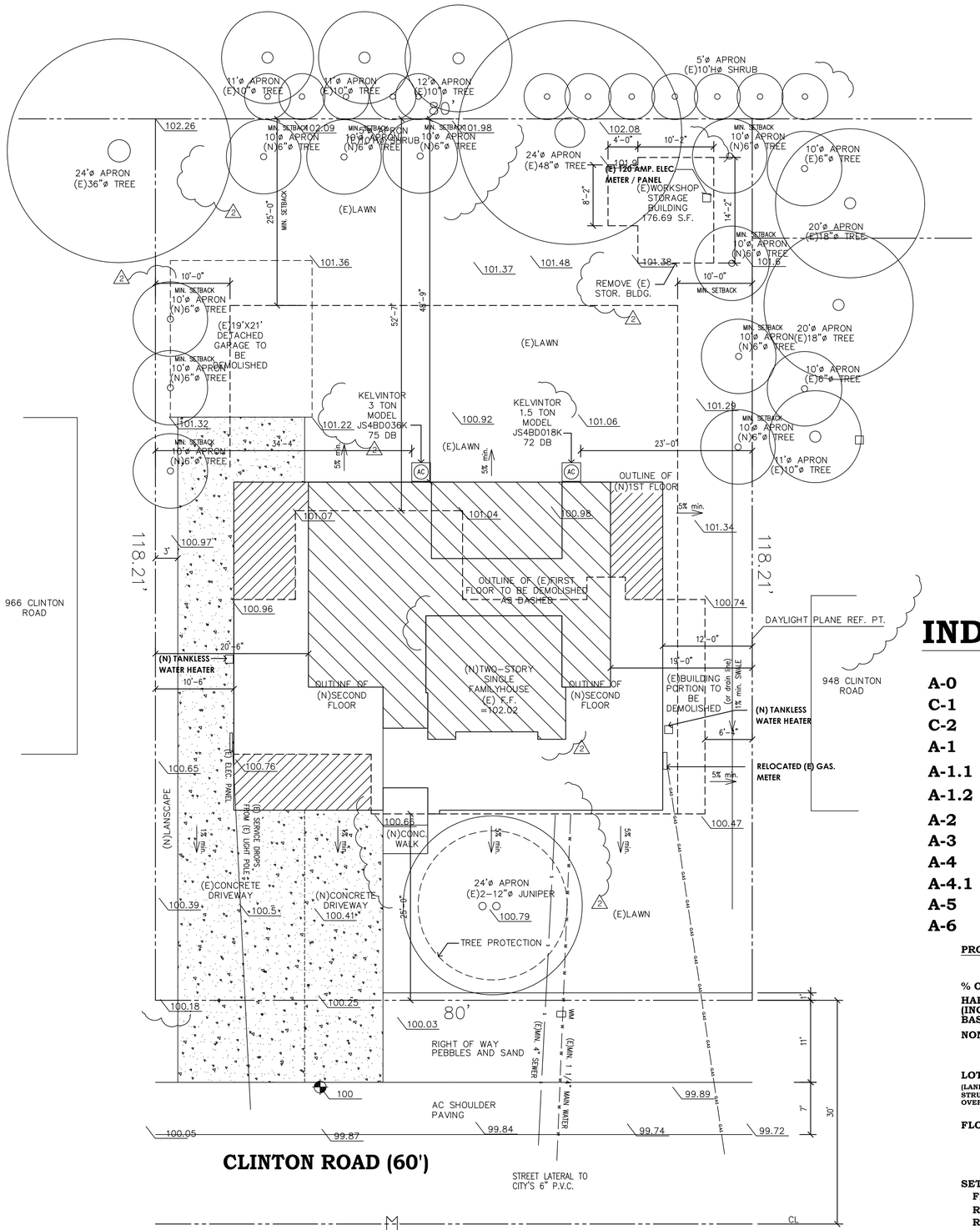


## SITE PLAN
SCALE: 1/8" = 1'-0"

## SCOPE OF WORK:

(1) Two story addition on top of existing one story single family residence.
(2) Addition and remodel to existing one one story single family residence. Demolish some existing walls for the remodel

## INDEX


| | |
|---|---|
| A-0 | COVER SHEET & SITE PLAN |
| C-1 | GRADING NOTES AND DETAILS |
| C-2 | GRADING AND DRAINAGE PLAN |
| A-1 | EXISTING FIRST FLOOR PLAN |
| A-1.1 | EXISTING ELEVATION |
| A-1.2 | PRPOSED FIRST FLOOR PLAN |
| A-2 | SECOND FLOOR PLAN |
| A-3 | ROOF PLAN |
| A-4 | BUILDING ELEVATIONS |
| A-4.1 | BUILDING ELEVATIONS |
| A-5 | BUILDING ELEVATIONS |
| A-6 | SECTIONS |


## BUILDING DATA

APN: 189-13-34
ZONE: R1-10
GROUP OF OCCUPANCY: R-3/U
TYPE OF CONSTRUCTION: VB

STORIES: (E)1, (N)2
LOT AREA: 9456.8 SQ FT

(E)1ST FLOOR AREA W/O GARAGE: 1645 SQ. FT
(E)DETACHED GARAGE AREA: 399 SQ. FT (BE DEMOLISHED)
(E)TOTAL AREA (W/GARAGE): 2044 SQ. FT
(E)STORAGE: 176 SQ. FT
PROPOSED 1ST FLOOR PLAN: 1920.64 SQ. FT
PROPOSED GARAGE AREA: 420.75 SQ. FT
PROPOSED 2ND FLOOR AREA: 959.48 SQ. FT
(N)TOTAL BUILDING AREA: 2880.12 SQ. FT (W/O GARAGE)
(N)TOTAL BUILDING AREA: 3300.87 SQ. FT (W/ GARAGE)

**PROJECT SUMMARY TABLE**

| | EXISTING | CHANGE IN | TOTAL PROPOSED |
|---|---|---|---|
| % OF FRONT YARD PAVING | N/A | N/A | N/A |
| HABITABLE LIVING AREA (INCLUDING HABITABLE BASEMENT AREA:) | 1645 S.F. | 256.64 S.F. | 2880.12 S.F. |
| NON-HABITABLE AREA: | 575 S.F. | 21.23 S.F. | 596.23 S.F. |
| | EXISTING | PROPOSED | ALLOWED/REQUIRED |
| LOT COVERAGE: (LAND AREA COVERED BY ALL STRUCTURES THAT ARE OVER 6 FT. IN HEIGHT) | 2220 S.F. (23.48%) | 2517.39 S.F. (26.62%) | 2837 S.F. (30%) |
| FLOOR AREA: | 1ST FL. 1645 S.F.<br>2ND FL. 0 S.F.<br>TOTAL 1645 S.F.<br>(17.39%) | 1ST FL. 1920.64 S.F.<br>2ND FL. 959.48 S.F.<br>TOTAL 2880.12 S.F.<br>(30.5%) | 3309.88 S.F.<br>(35%) |
| SETBACKS: | | | |
| FRONT: | 25' | 25' | 25 FT. |
| REAR: | 52'-7" | 48'-9" | 25 FT. |
| RIGHT: | 6'-4" | 12' 19' | 10 FT. 17.5 FT. |
| LEFT: | 10'-6" | 10'-6" 20'-6" | 10 FT. 17.5 FT. |
| HEIGHT: | 12'-10" | 24'-3" | 27' |

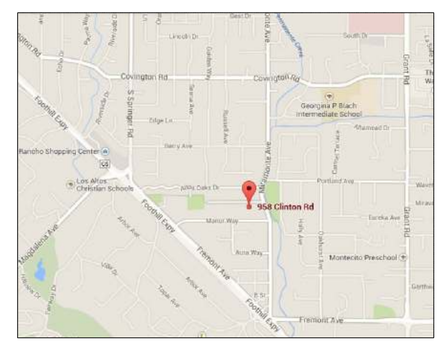


## VICINITY MAP


David Wong
Design

958 Meadowood Drive
San Jose, CA 95120
408-605-5335


**ADDITION & REMODEL**
**WENG'S RESIDENCE**
**958 CLINTON ROAD**
**LOS ALTOS, CA 94024**

| Revisions | By |
|---|---|
| 1 4-1-14 | DW |
| 2 7-22-14 | DW |

| | |
|---|---|
| Drawn | |
| Check | |
| Date | 10/23/13 |
| Scale | NOTED |
| Job | |

Sheet
**A-0**
Of

## EXISTING FRONT ELEVATION

NTS


David Wong
Design

958 Meadowood Drive
San Jose, CA 95120
408-605-5335


**ADDITION & REMODEL**
**WENG'S RESIDENCE**
**958 CLINTON ROAD**
**LOS ALTOS, CA 94024**

| Revisions | By |
|---|---|
| 1 4-1-14 | DW |
| | |
| | |
| | |
| | |
| | |

| | |
|---|---|
| Drawn | |
| Check | |
| Date | 10/23/13 |
| Scale | NOTED |
| Job | |

Sheet
**A-1.1**
Of

## GENERAL NOTES

A. All construction, materials, and workmanship shall conform to the current applicable codes, regulations, and city ordinances currently in use. (See cover sheet as well)
Applicable code editions
- 2010 CBC
- 2010 CRC
- 2010 CFC
- 2010 CEC
- 2010 CMC
- 2010 CPC

B. All works involving the public right of way must conform to the city standards.

C. All utility connections and installation shall conform to the applicable codes, city standrads, and the specifications and requirements of the utility company

D. The contractor and/or sub-contractor shall verify all the information and drawings prior to the start of the construction, also including, but not limiting to, location and acceptablity of existing utilities. Any discrepancy shall be directed to the architect and/or engineer for immediate attention and further action.

E. Construction drawing notes and details take precedence over general notes and typical details. All dimensions take precedence over scale shown on plans, sections, and details. Dimension scaled from the drawings shall be verified with the architect and/or the design engineer.

F. The constractor shall maintain the job site in a reasonably neat and orderly condition and keep free from rubbish and accumulations of waste materials.

G. All dimensions are to the face of wall in general, unless otherwise noted.

H. All finishes and cabinet designs are to be approved by the owner in writing prior to and installation.

I. Locations, sizes, clearances, etc. of all appliances, fixtures, and equipments shall be verified before any rough-in work, installation, or fabrication.

J. Use minimum 30#felt strips to separate new exterior concrete walks and pavings from the foundation walls, unless otherwise noted.

K. Use double glazing for glazing in windows, skylights, and door windows, unless otherwise noted.

L. Weatherstrip all doors and windows. Caulk and seal all joints and penetrations.

M. Provide min. 28 ga galvanized sheet metal flashing at all roof valleys.

N. Provide outside air kit with all pre-fab firplace.

O. Provide min. R-30 insulation at top of ceiling or in between cathedral ceiling/roof framing at all roof areas. Provide min. R-13 insulation at exterior walls. Provide min. R-19 insulation at floor areas.

## CODE NOTES

A. All water closet stools shall be located in space not less than 30" in width and 24" in front.

B. Enclosed usable space under stairways shall be protected on the enclosed side with 1/2 inch gypsum board. (CRC R302.7)

C. 2x fire stop shall be provided in concealed spaces of stud walls and partitions at ceiling and floor levels and at 10 ft intervals along the length of the wall and in concealed space between stair stringers at top and bottom of the run.

D. Provide fire stops around the chimney in opening at ceiling and floor levels with noncombustible materials.

E. The fireplace should be listed by a recognized testing listing agent, the listing must be current, the model and manufacturer must be listed in the current catalog of the listing agent.

F. Per Sec. R310.1 of 2010 CRC, sleeping rooms must have an operable window or exterior door for emergency means of egress which opens directly onto a public street, alley, yard or exterior court. Emergency escape and rescue openings shall have the bottom of the clear opening not greater than 44 inches measured from the floor, 5.7 ft2 of net openable area, 24" net clear opening height, and 20" net clear opening width.

G. Bathtub and shower floors and walls above bathtubs with installed shower heads and in shower compartments shall be finished with a nonabsorbent surface extend to height of not less than 72" inches above the floor. (2010 CRC R307.2)

All shower compartments shall have a min. finished interior of 1024 SQ inches and shall also be capable of encompassing a 30 inches circle.

H. Provide minimum 24"x18" underfloor access.

I. Glazing in hazardous locations shall be tempered.
a. Ingress and egress doors
b. Panels in sliding or swinging doors
c. Doors and enclosure for hot tub, bathtub, showers (Also glazing in wall enclosing these compartments within 5' of standing surface)
d. If within 2' of vertical edge of closed door and within 5' of standing surface
e. In wall enclosing stairway landing

J. Tempered safety glass typical at all exterior sliding glass doors, side lights adjacent to doors, any glass less than 18" from floor aand interior shower enclosures.

K. Smoke detectors shall be provided as follows: (2010 CRC R314.6)
a. In new construction smoke detectors shall receive their primary power source from the building wiring and shall be equipped with battery back up and low battery signal. Smoke detectors shall be located in each sleeping room & hallway or area giving access to a sleeping room, and on each story and basement for dwellings with more than one story.
b. In existing construction smoke detectors may be battery operated, installed in locations as specified in a above.

L. An attached garage shall be separated from the dwelling with a min. 5/8" gyp. bd.. applied to the garage side. Garage shall be separated from any habitable rooms above by not less than a 5/8" Type X gyp. bd. or equivalent. The door between the garage and the dwelling shall be solid wood, solid core steel or honeycomb core steel not less than 1-3/8" thick. Doors should be self-closing & self-latching

M. The underfloor ventilation shall have a net area of not less than 1/150 of the underfloor area. Vents shall be located as close to corners as practical and shall provide cross ventilation (2010 CRC R408)

N. Provide attic ventilation not less than 1/150 of the area of the attic. (2010 CRC R806.2)

O. Where wood fram walls and partitions are covered on the interior with plaster, tile, or similar materials and are subjected to water splash, the framing shall be protected with waterproof building paper.

P. Stairway should have max. 7.75" rise and min. 10" run and min. 6'-8" headroom and min. 36" width. handgrip of handrail shall not be less than 1 1/4 inches nor more than 2 inches. For any treads that are less than 11 inches, min. 0.75", max nosing required

Q. Guardrail shall be designed to be able to resist 20 lbs/ft horiz. force at the top . Guardrail shall be 42" high minimum with intermediate members @ 4" O.C. max. (2010 CRC R312.2)

R. The landings outside all exterior doors to be not more than 7.75" lower than threshold for in-swinging doors (or not more than 0.5" lower than threshold for out-swinging doors and 0.75" for sliding doors.

S. The water heater and heating and cooling equipment (generating a glow, spark, or flame capable of igniting flammable vapors) shall be installed 18" above garage floor

T. Provide adequate seismic anchorage of water heater to include anchors or straps at points within the upper and lower one-third of its vertical dimension, the lower anchor/strap located to maintain a minimum distance of 4" above the controls

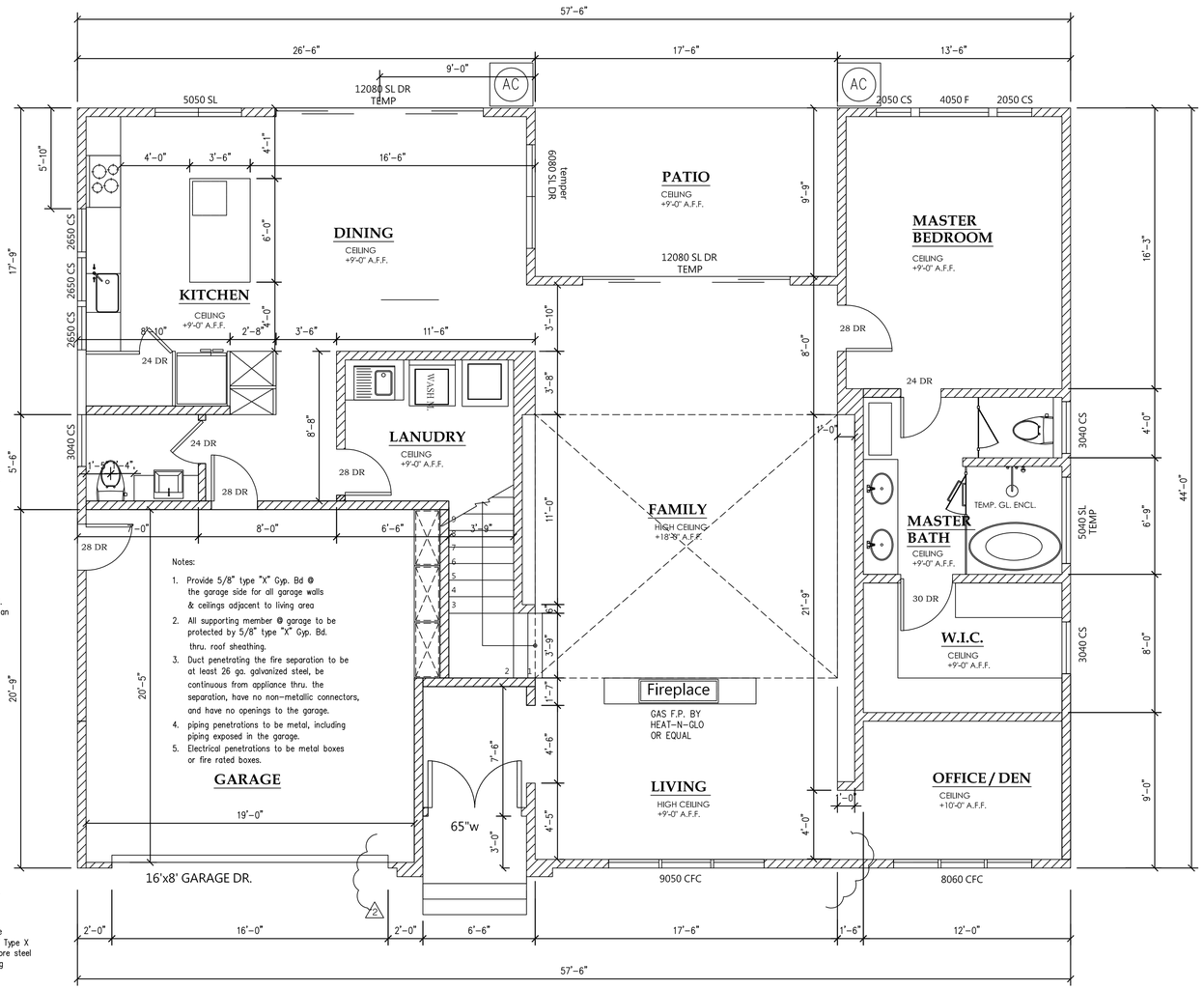


# PROPOSED 1ST FLOOR PLAN

SCALE: 1/4"=1'-0"

(E) WALLS TO REMAIN

(N) WALLS TO BE ADDED

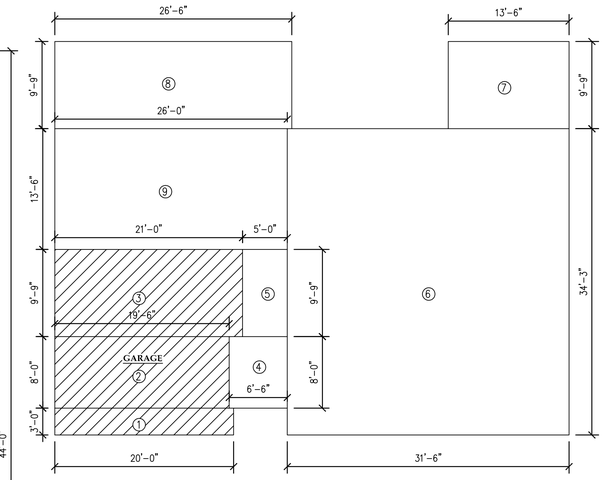


AREA TABULATION OF GARAGE

1. 3x20 = 60
2. 8x19.5 = 156
3. 9.75x21 = 204.75

PROPOSED GARAGE AREA
= 60 + 156 + 204.75 = 420.75 SQ. FT

AREA TABULATION OF LIVING AREA

4. 6.5x8 = 52
5. 5x9.75 = 48.75
6. 31.5x34.25 = 1078.88
7. 9.75x13.5 = 131.63
8. 9.75x26.5 = 258.38
9. 13.5x26 = 351

PROPOSED FIRST FLOOR LIVING AREA
= 52 + 48.75 + 1078.88 + 131.63 + 258.38 + 351 = 1920.64 SQ. FT


David Wong
Design

958 Meadowood Drive
San Jose, CA 95120
408-605-5335


**ADDITION & REMODEL**
**WENG'S RESIDENCE**
**958 CLINTON ROAD**
**LOS ALTOS, CA 94024**

| Revisions | By |
|---|---|
| 1 4-1-14 | DW |
| 2 7-22-14 | DW |
| | |
| | |
| | |

| | |
|---|---|
| Drawn | |
| Check | |
| Date | 10/23/13 |
| Scale | NOTED |
| Job | |

Sheet
**A-1.2**
Of

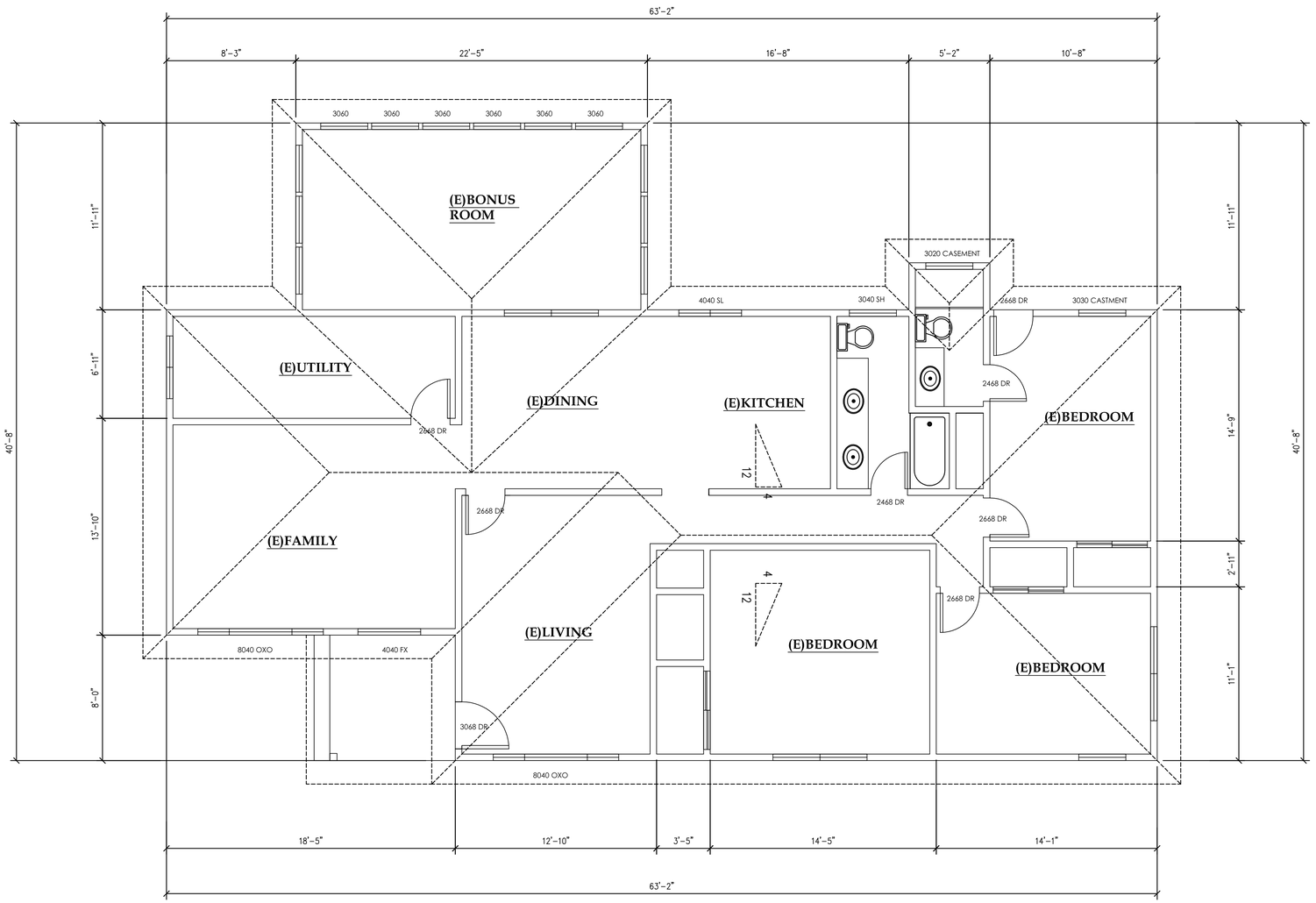


# EXISTING 1ST FLOOR PLAN

SCALE: 1/4"=1'-0"


David Wong
Design

958 Meadowood Drive
San Jose, CA 95120
408-605-5335


**ADDITION & REMODEL**
**WENG'S RESIDENCE**
**958 CLINTON ROAD**
**LOS ALTOS, CA 94024**

| Revisions | By |
|---|---|
| 1 4-1-14 | DW |
| | |
| | |
| | |
| | |
| | |

| | |
|---|---|
| Drawn | |
| Check | |
| Date | 10/23/13 |
| Scale | NOTED |
| Job | |

Sheet
**A-1**
Of

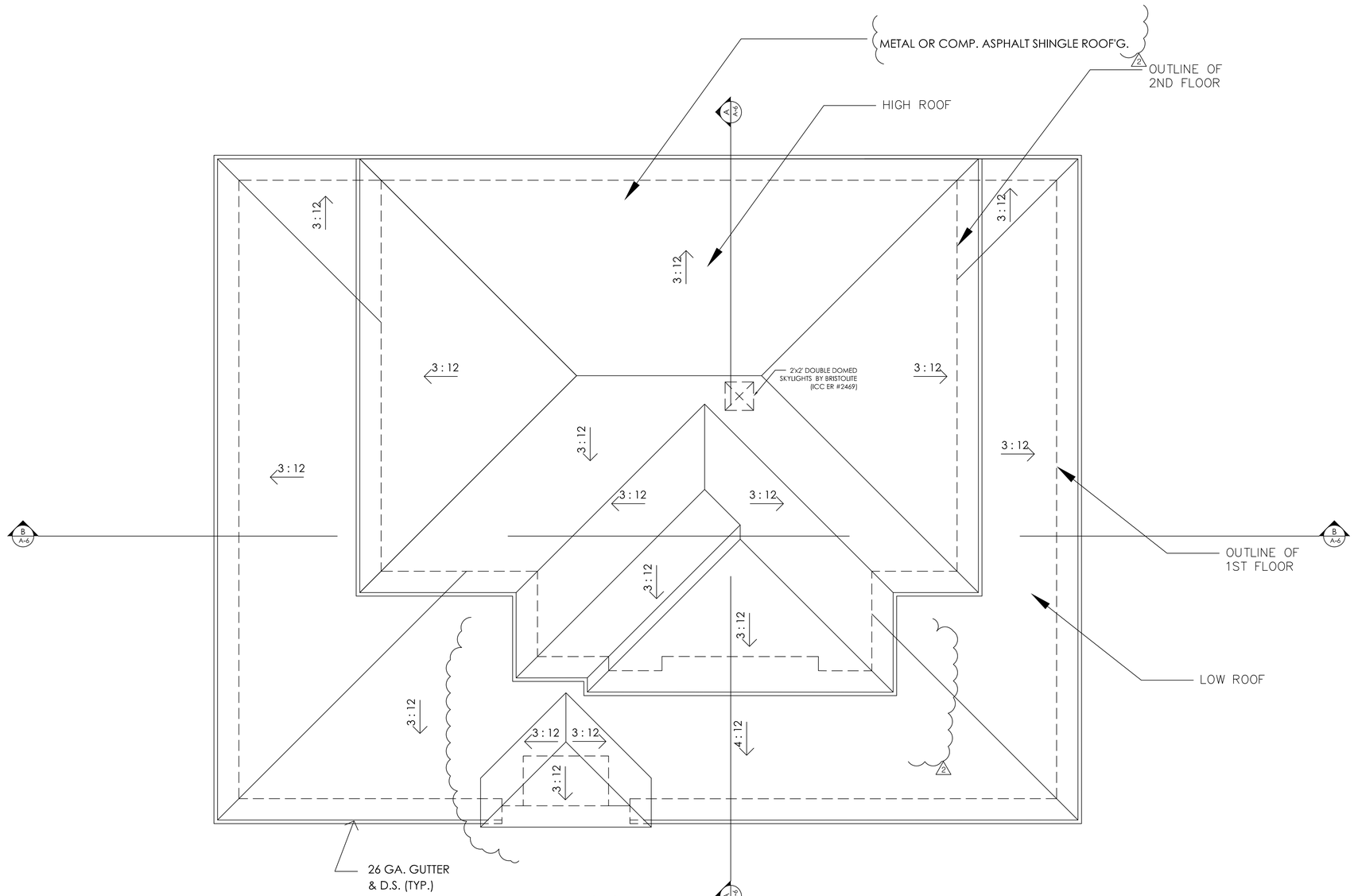


# ROOF PLAN

**SCALE: 1/4"=1'-0"**


David Wong
Design

958 Meadowood Drive
San Jose, CA 95120
408-605-5335


**ADDITION & REMODEL**
**WENG'S RESIDENCE**
**958 CLINTON ROAD**
**LOS ALTOS, CA 94024**

| Revisions | By |
|---|---|
| 1 4-1-14 | DW |
| 2 7-22-14 | DW |
| | |
| | |
| | |
| | |

| | |
|---|---|
| Drawn | |
| Check | |
| Date | 10/29/13 |
| Scale | NOTED |
| Job | |

Sheet
**A-3**
Of

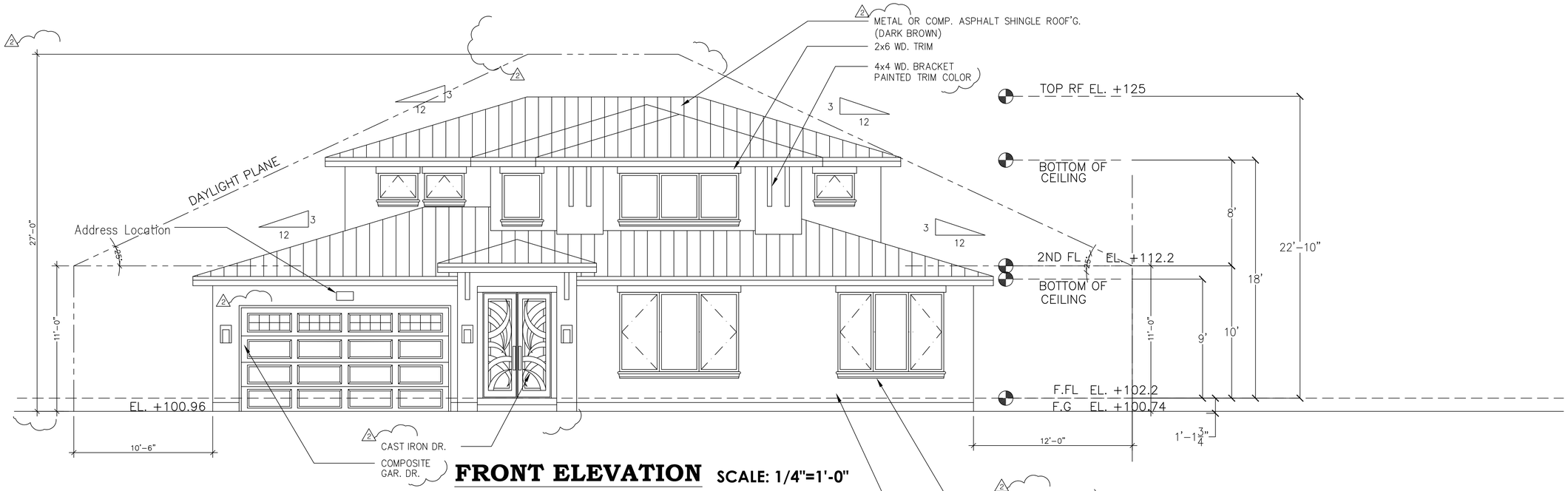


**FRONT ELEVATION** SCALE: 1/4"=1'-0"

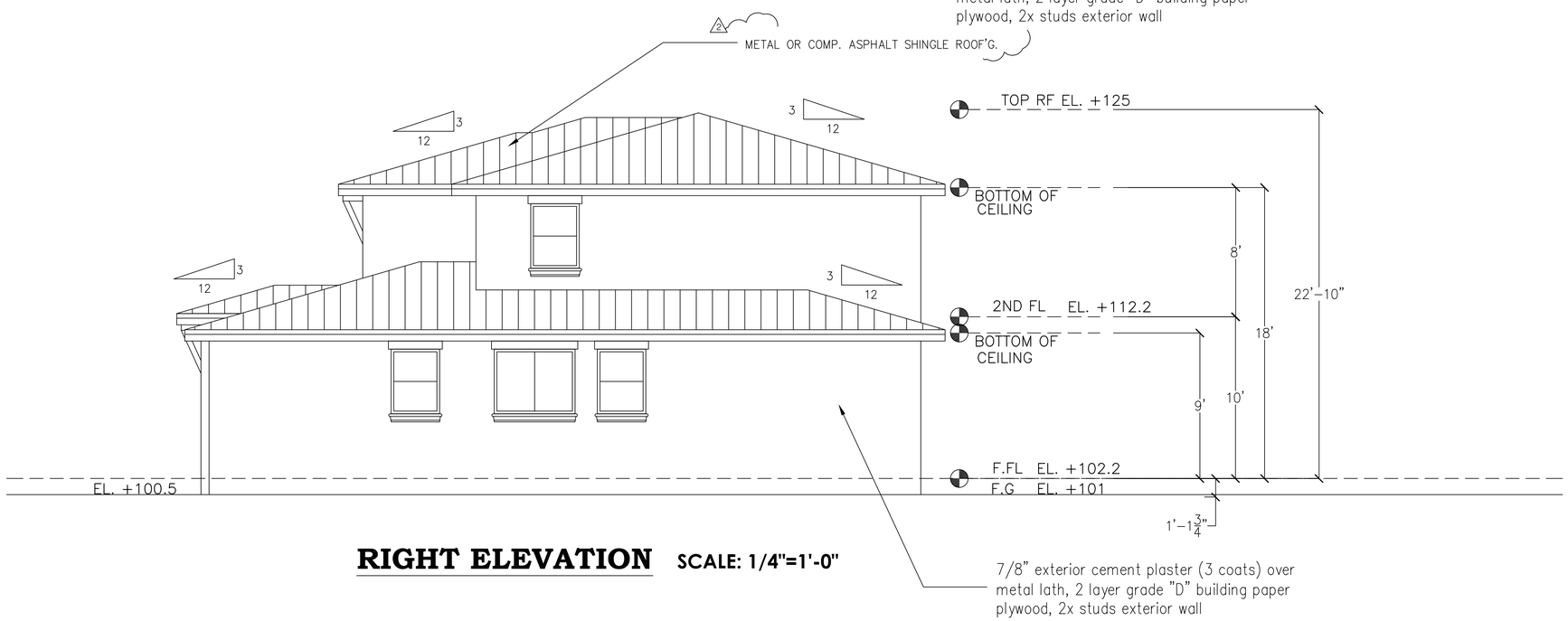


**RIGHT ELEVATION** SCALE: 1/4"=1'-0"


David Wong
Design

958 Meadowood Drive
San Jose, CA 95120
408-605-5335


**ADDITION & REMODEL**
**WENG'S RESIDENCE**
**958 CLINTON ROAD**
**LOS ALTOS, CA 94024**

| Revisions | By |
|---|---|
| 1 4-1-14 | DW |
| 2 7-22-14 | DW |

| | |
|---|---|
| Drawn | |
| Check | |
| Date | 10/29/13 |
| Scale | NOTED |
| Job | |

Sheet
**A-4**
Of

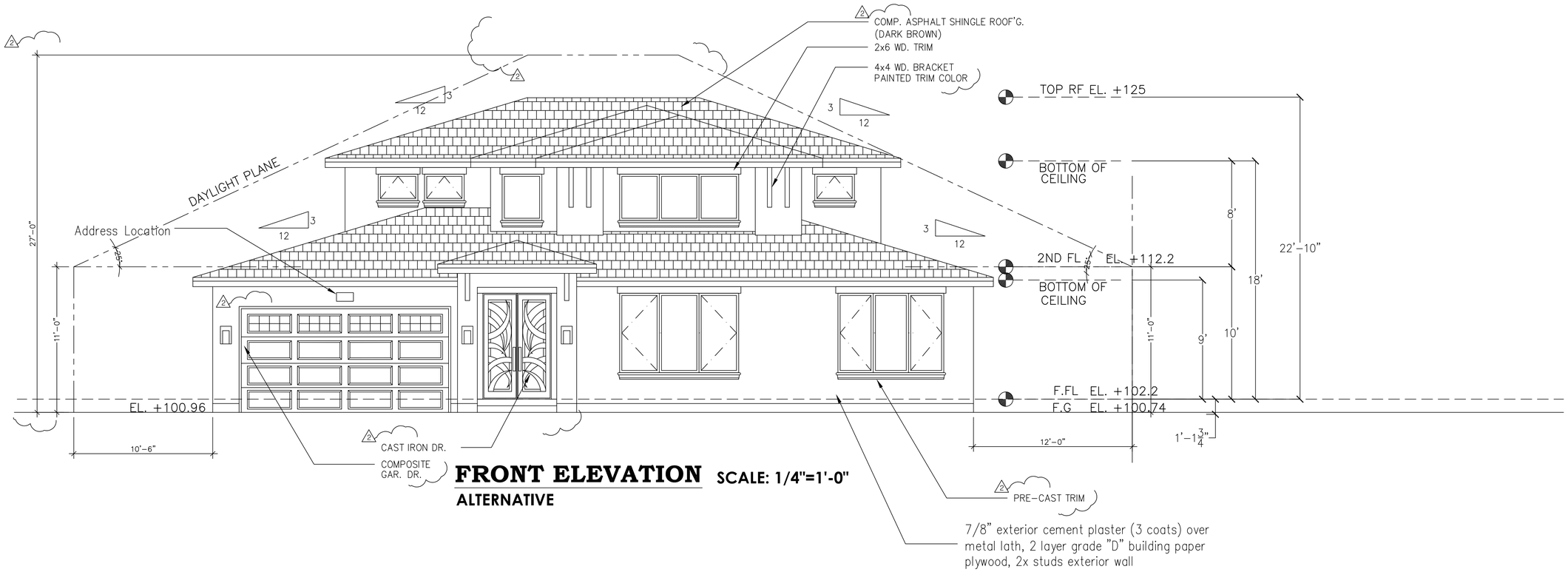


# FRONT ELEVATION SCALE: 1/4"=1'-0"

**ALTERNATIVE**


David Wong
Design

958 Meadowood Drive
San Jose, CA 95120
408-605-5335


**ADDITION & REMODEL**
**WENG'S RESIDENCE**
**958 CLINTON ROAD**
**LOS ALTOS, CA 94024**

| Revisions | By |
|---|---|
| 1 4-1-14 | DW |
| 2 7-22-14 | DW |
| | |
| | |
| | |
| | |

| | |
|---|---|
| Drawn | |
| Check | |
| Date | 10/29/13 |
| Scale | NOTED |
| Job | |

Sheet
**A-4.1**
Of

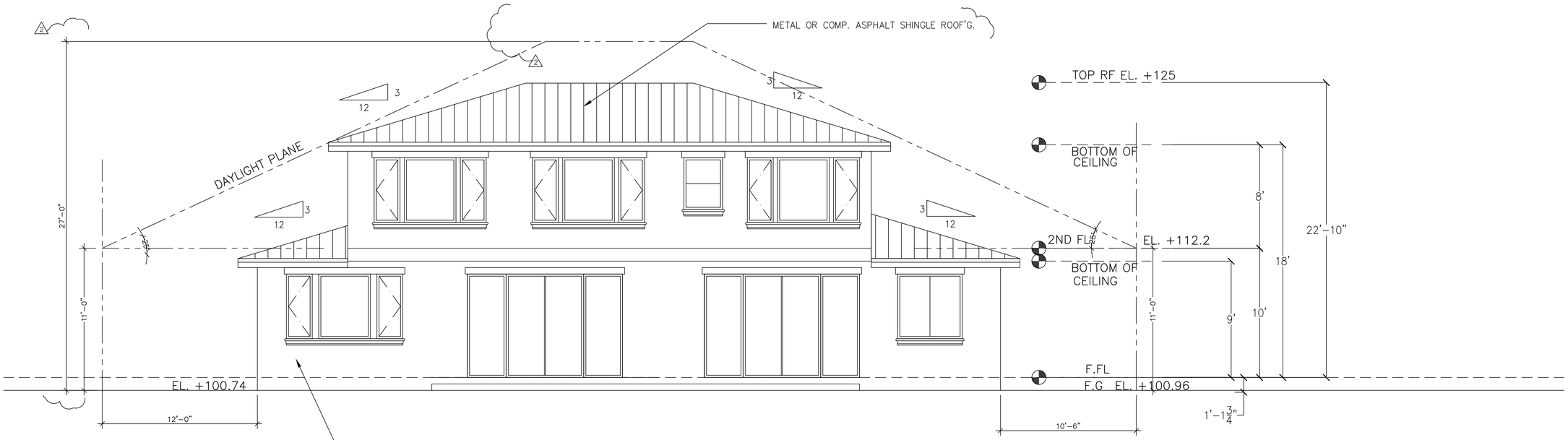


## REAR ELEVATION

SCALE: 1/4"=1'-0"

7/8" exterior cement plaster (3 coats) over metal lath, 2 layer grade "D" building paper plywood, 2x studs exterior wall

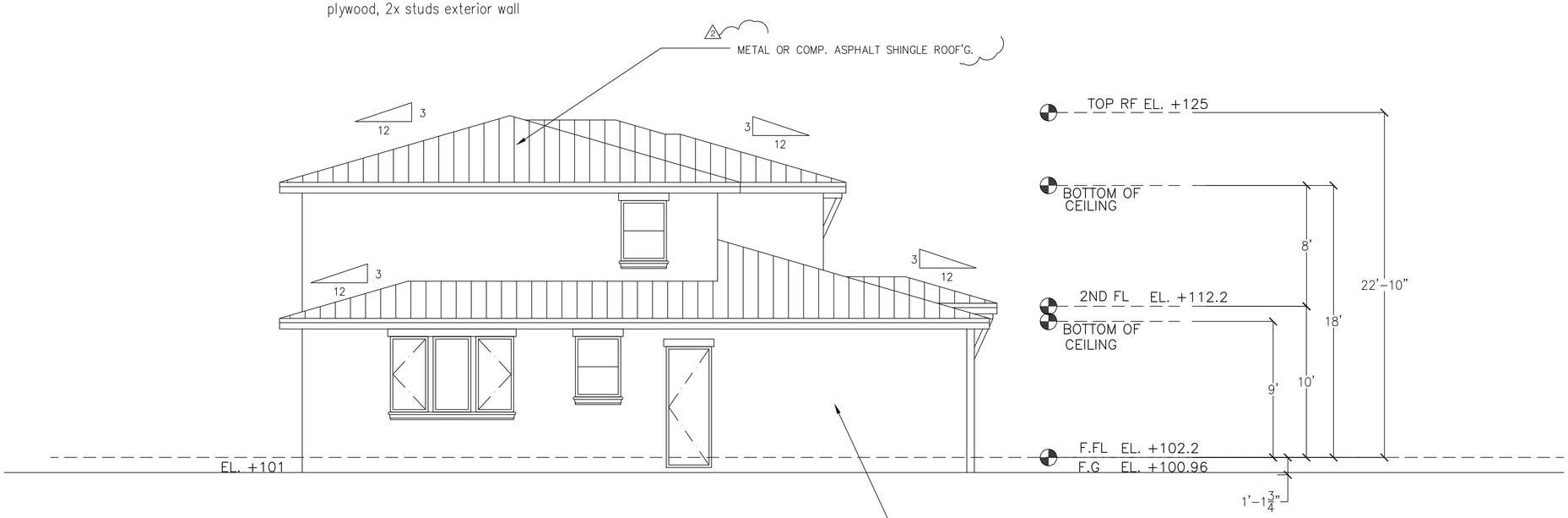


## LEFT ELEVATION

SCALE: 1/4"=1'-0"

7/8" exterior cement plaster (3 coats) over metal lath, 2 layer grade "D" building paper plywood, 2x studs exterior wall


David Wong
Design

958 Meadowood Drive
San Jose, CA 95120
408-605-5335


**ADDITION & REMODEL**
**WENG'S RESIDENCE**
**958 CLINTON ROAD**
**LOS ALTOS, CA 94024**

| Revisions | By |
|---|---|
| 1 4-1-14 | DW |
| 2 7-22-14 | DW |

| | |
|---|---|
| Drawn | |
| Check | |
| Date | 10/29/13 |
| Scale | NOTED |
| Job | |

Sheet
**A-5**
Of

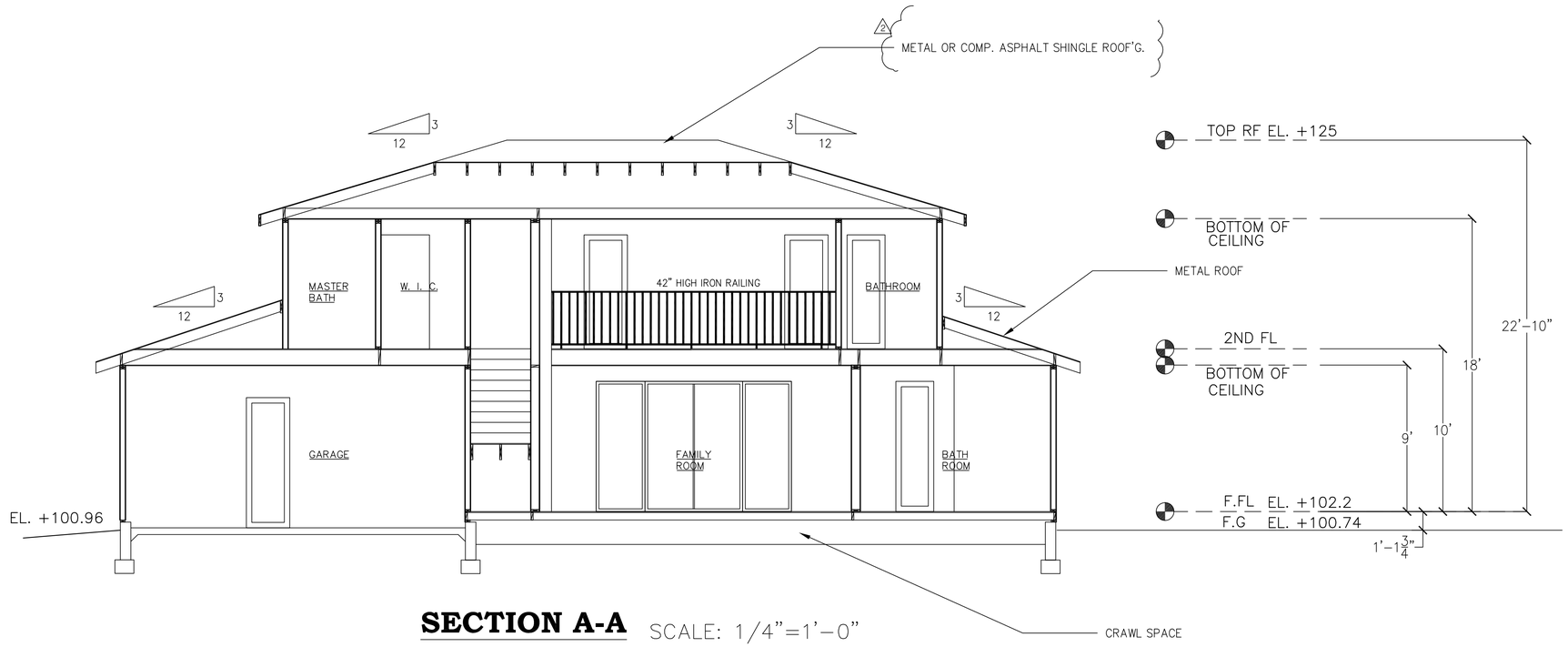


**SECTION A-A** SCALE: 1/4"=1'-0"

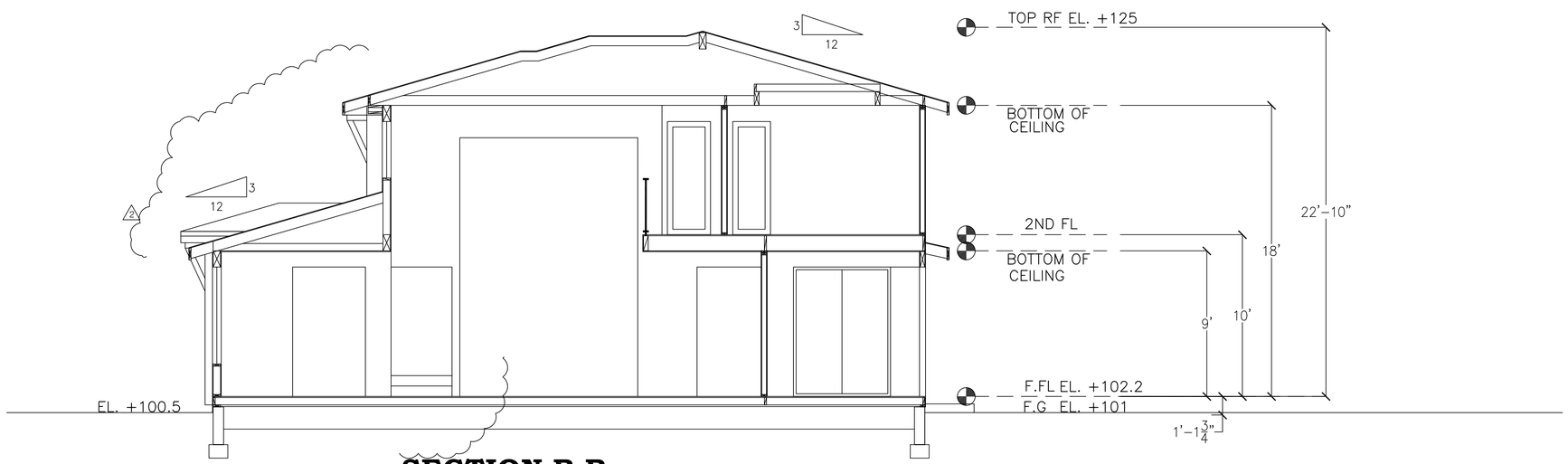


**SECTION B-B** SCALE: 1/4"=1'-0"


David Wong
Design

958 Meadowood Drive
San Jose, CA 95120
408-605-5335


**ADDITION & REMODEL**
**WENG'S RESIDENCE**
**958 CLINTON ROAD**
**LOS ALTOS, CA 94024**

| Revisions | By |
|---|---|
| 1 4-1-14 | DW |
| 2 7-22-14 | DW |

| | |
|---|---|
| Drawn | |
| Check | |
| Date | 11/4/13 |
| Scale | NOTED |
| Job | |

Sheet
**A-6**
Of

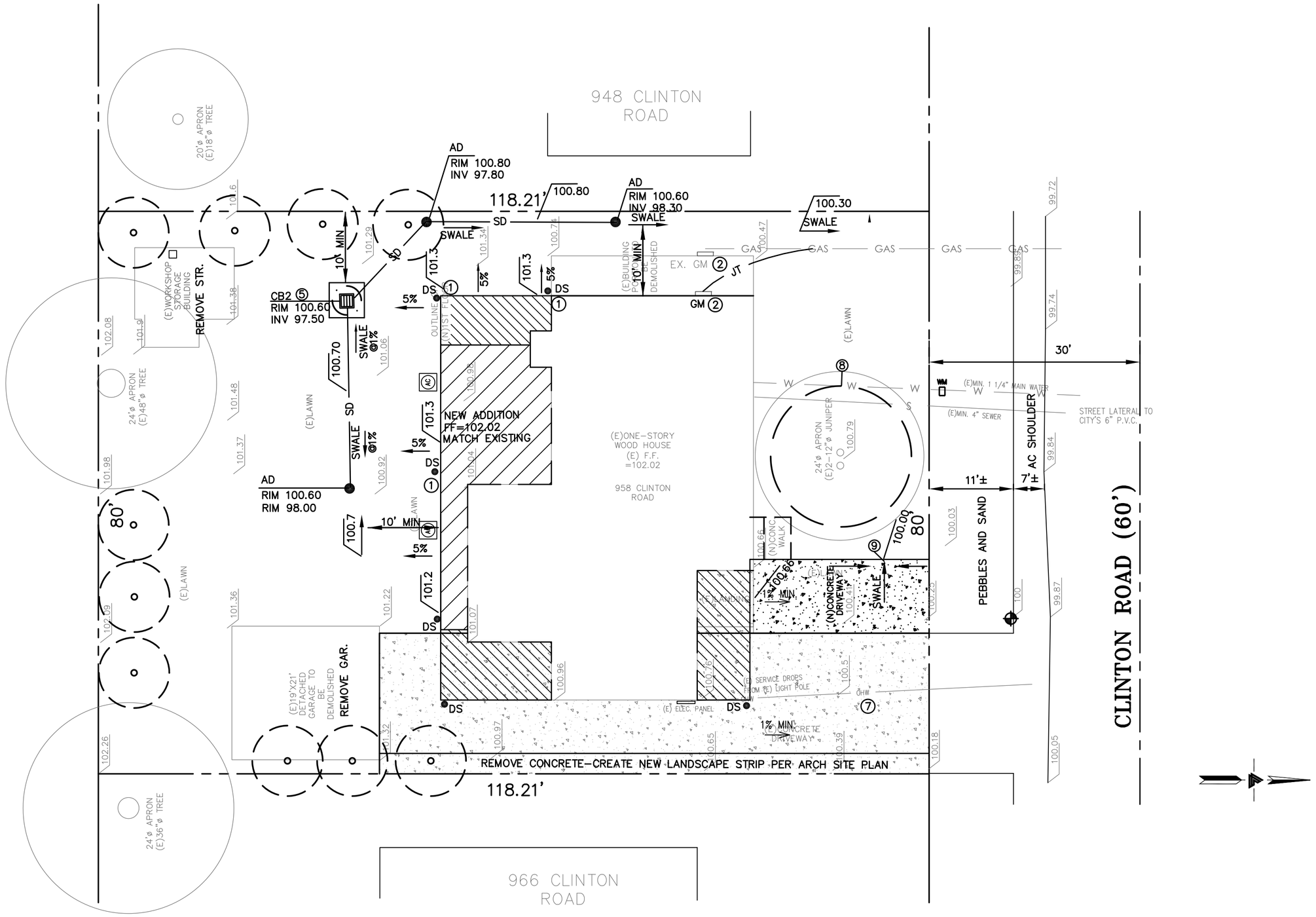


## TOPOGRAPHIC SURVEY BY:


**CHIA-CHING LIN**
**45741 CHABLIS COURT**
**FREMONT CA 94539**

**TEL: (510)-623-0681**
**FAX: (510)-623-0681**


## NOTES

ALL DISTANCES AND DIMENSIONS ARE IN FEET AND DECIMALS OF A FOOT.

UNDERGROUND UTILITY LOCATION IS BASED ON SURFACE EVIDENCE.

BUILDING FOOTPRINTS ARE SHOWN AT GROUND LEVEL.

FINISH FLOOR ELEVATIONS ARE TAKEN AT DOOR THRESHOLD (EXTERIOR)

## SITE BENCHMARK

SURVEY CONTROL POINT
ELEVATION SET AS REFERENCE AS= 100.00'

## NOTES

1. INSTALL SPLASH BLOCKS AT ALL DOWNSPOUTS WHERE DOWNSPOUT DRAINS TO SOIL.
2. RELOCATE GAS METER
3. NOT USED
4. STORM DRAINAGE PIPING SHOWN TO BE 6" PVC SCH.40 OR GREATER SLOPING @ 2% MIN., TYPICAL
5. SEE DETAIL 1 , SHEET C1 FOR SHALLOW GRAVE BASIN
6. NOT USED
7. ALL OVERHEAD WIRES AND UTILITIES TO BE UNDERGROUNDED.
8. INSTALL TREE PROTECTION
9. NEW CONCRETE DWY. TO DRAIN INTO LANDSCAPE VIA DWY. SWALE.

# FOR PLANNING APPROVAL


BAYLAND CONSULTING
www.baylandconsulting.com

BAY LAND CONSULTING
LAND SURVEYORS/CIVIL ENGINEERS
2005 De La Cruz Boulevard, Suite 165
Santa Clara, California 95050
Ph: (408) 296-6000 FAX: (408) 404-5579
EMAIL: Surveyor@baylandconsulting.com
SERVING THE BAY AREA


GRADING AND DRAINAGE PLAN
958 CLINTON ROAD, LOS ALTOS , CA
APN 189-13-034
SANTA CLARA COUNTY

| REVISIONS | |
|---|---|
| DATE | DESCRIPTION |
| △ | |
| △ | |
| △ | |
| △ | |

| | |
|---|---|
| JOB NO. | 14057 |
| SCALE: | 1"=10' |
| DWN: | MC |
| DATE: | 08/26/14 |

SHEET
C2
OF 2 SHEETS

## GENERAL NOTES

1. ALL MATERIALS AND WORKMANSHIP SHALL CONFORM TO THE GENERAL AND SPECIFIC PROVISIONS. STANDARD DRAWINGS, AND REQUIREMENTS OF THE CITY OF LOS ALTOS.
2. IT IS THE CONTRACTOR'S RESPONSIBILITY TO VERIFY THE LOCATION OF ALL EXISTING UTILITIES WITH THE APPROPRIATE UTILITY AGENCIES PRIOR TO THE COMMENCEMENT OF CONSTRUCTION. CONTRACTOR SHALL NOTIFY ALL PUBLIC AND PRIVATE UTILITY OWNERS 48 HOURS PRIOR TO COMMENCEMENT OF WORK ADJACENT TO THE UTILITY CONTACT UNDERGROUND SERVICE ALERT (USA) AT 800/642–2444.
3. EXISTING UTILITIES SHOWN ARE BASED UPON RECORD INFORMATION AND ARE APPROXIMATE IN LOCATION AND DEPTH. THE CONTRACTOR SHALL POTHOLE ALL EXISTING UTILITIES THAT MAY BE AFFECTED BY NEW FACILITIES IN THIS CONTRACT. VERIFY ACTUAL LOCATION AND DEPTH, AND REPORT POTENTIAL CONFLICTS TO THE ENGINEER PRIOR TO EXCAVATION FOR NEW FACILITIES.
4. IT IS THE CONTRACTORS RESPONSIBILITY TO REPLACE ALL STREET MONUMENTS, LOT CORNER PIPES, AND GRADE STAKES DISTURBED DURING THE PROCESS OF CONSTRUCTION AT THE REGULAR ENGINEER'S FEE.
5. PROVIDE CONCRETE PROTECTION BETWEEN UNDERGROUND PIPE CROSSINGS WITH 12" OR LESS VERTICAL CLEARANCE.
6. ALL SURPLUS AND UNSUITABLE MATERIAL SHALL BE REMOVED FROM PROJECT SITE AND FROM PUBLIC RIGHT–OF–WAY.
7. CONTRACTOR SHALL PROVIDE ADEQUATE DUST CONTROL AND KEEP MUD AND DEBRIS OFF THE PUBLIC RIGHT–OF–WAY AT ALL TIMES.
8. ALL TRENCHES AND EXCAVATIONS SHALL BE CONSTRUCTED IN STRICT COMPLIANCE WITH THE APPLICABLE SECTIONS OF CALIFORNIA AND FEDERAL O.S.H.A. REQUIREMENTS AND OTHER APPLICABLE SAFETY ORDINANCES. CONTRACTOR SHALL BEAR FULL RESPONSIBILITY FOR TRENCH SHORING DESIGN AND INSTALLATION.
9. GRADE BREAKS ON CURBS AND SIDEWALKS ARE TO BE ROUNDED OFF ON FORM WORK AND FINISHED SURFACING.
10. CONTRACTOR SHALL PERFORM HIS CONSTRUCTION AND OPERATION IN MANNER WHICH WILL NOT ALLOW HARMFUL POLLUTANTS TO ENTER THE STORM DRAIN SYSTEM. TO ENSURE COMPLIANCE, THE CONTRACTOR SHALL IMPLEMENT THE APPROPRIATE BEST MANAGEMENT PRACTICE (BMP) AS OUTLINED IN THE BROCHURES ENTITLED BEST MANAGEMENT PRACTICES FOR THE CONSTRUCTION INDUSTRY" ISSUED BY THE SAN MATEO COUNTYWIDE STORM WATER POLLUTION PREVENTION PROGRAM, TO SUIT THE CONSTRUCTION SITE AND JOB CONDITION, THE CONTRACTOR SHALL PRESENT HIS PROPOSED BMP AT THE PRECONSTRUCTION MEETING FOR DISCUSSION AND APPROVAL.
11. OVERNIGHT PARKING OF CONSTRUCTION EQUIPMENT IN THE STREET RIGHT–OF–WAY SHALL NOT BE PERMITTED, EXCEPT AT LOCATION(S) APPROVED BY THE CITY TRAFFIC ENGINEER.

### CITY REQUIREMENTS FOR CERTIFICATES OF SURVEY BY A LICENSED CIVIL SURVEYOR OR CIVIL ENGINEER

1. AT THE TIME OF FOUNDATION AND/ OR FOOTING PRE–POUR INSPECTION TO VERIFY BUILDING SETBACKS FROM PROPERTY LINES, BUILDING DIMENSIONS AND FINISHED FLOOR ELEVATION.
2. AT ROOF NAIL TO VERIFY COMPLIANCE WITH THE DAYLIGHT PLANE, AVERAGE HEIGHT AND TOTAL HEIGHT BASED ON THE JOB SITE PLANS AND SPECIFICATIONS.
3. AT FINAL INSPECTION TO VERIFY COMPLIANCE WITH GRADING AND DRAINAGE PLAN.

## UNDERGROUND UTILITY NOTES

1. CONTRACTOR SHALL CONTACT U.S.A. AT LEAST 48 HOURS PRIOR TO EXCAVATING IN ANY AREA WHERE UNDERGROUND FACILITIES ARE LOCATED. PHONE (800)642–2444.
2. THE EXISTENCE, LOCATION AND ELEVATION OF ANY UNDERGROUND UTILITIES ARE SHOWN IN A GENERAL WAY ONLY. IT WILL BE THE RESPONSIBILITY AND DUTY OF THE CONTRACTOR TO MAKE FINAL DETERMINATIONS AS TO THE EXISTENCE, LOCATION AND ELEVATION OF ALL UTILITIES.

## GRADING NOTES

1. DATE OF SURVEY: APRIL 2014
2. FINISHED GRADES ALONG THE PERIMETER OF THE FOUNDATION TO BE SLOPED AT A MINIMUM OF 2% FOR FIRST 5 FEET.
3. ALL CONCRETE SHALL BE CLASS "A" CONFORMING TO SECTION 90 OF CALTRANS SPECIFICATIONS AND SHALL DEVELOP A COMPRESSIVE STRENGTH OF 3,000 PSI AT 28 DAYS PER CALIFORNIA TEST METHOD NO. 521.
4. ON–SITE UTILITY TRENCHES SHALL BE BACKFILLED WITH COMPACTED ENGINEERED FILL. THE FILL MATERIAL SHALL BE PLACED IN LIFTS NOT TO EXCEED EIGHT (8) INCHES IN UNCOMPACTED THICKNESS AND SHALL BE MECHANICALLY COMPACTED TO AT LEAST 90% RELATIVE COMPACTION.
5. LOCATION OF TREES SHOWN HEREON ARE TAKEN AT A POINT THAT THE TREE ENTERS THE GROUND. SIZES OF TREES SHOWN HEREON ARE TAKEN AT DBH (DIAMETER AT BREAST HEIGHT)
6. ALL UTILITIES SHALL BE UNDERGROUND FROM THE PROPERTY LINES IN. LOCATION OF METERS ARE AS NOTED. COORDINATE ALL SUCH WORK WITH THE UTILITY COMPANY HAVING JURISDICTION.
7. CONTRACTOR SHALL BARRICADE AND PROTECT ALL EXISTING SITE FEATURES INCLUDING TREES, FENCES, GATES, UTILITIES, ETC.
8. ALL ON–SITE STORM DRAINAGE AND SANITARY SEWER PIPE TO BE PVC SCHEDULE 40.

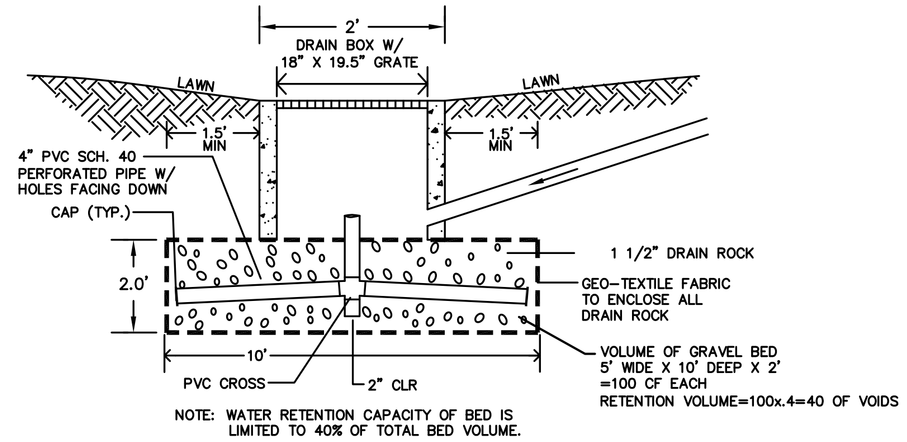


SHALLOW GRAVEL BASIN (1)

ON–SITE ONLY — SCALE: NTS

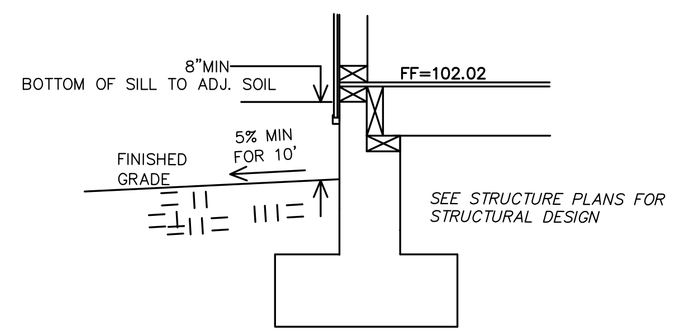


CONCEPTUAL PERIMETER FOOTING–TYPE 1
CLEARANCE FROM ADJACENT SOIL
SEE STR. & ARCH. PLANS (2)

ON–SITE ONLY — SCALE: N.T.S

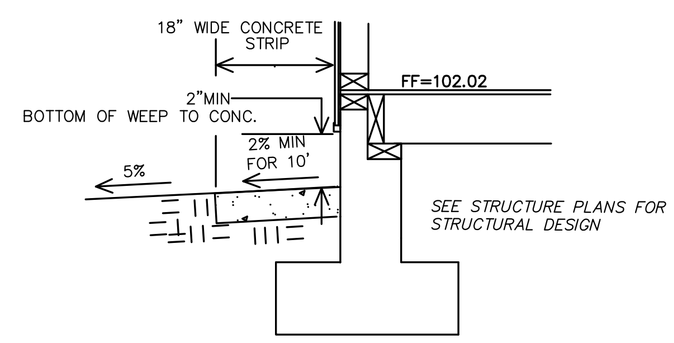


ALTERNATE
CONCEPTUAL PERIMETER FOOTING–TYPE 2
CLEARANCE WITH CONCRETE APRON
SEE STR. & ARCH. PLANS (3)

ON–SITE ONLY — SCALE: N.T.S

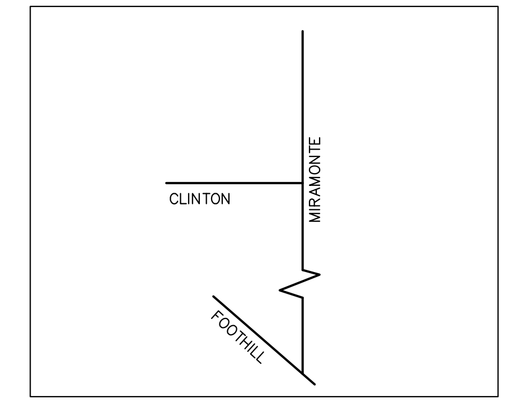


VICINITY MAP

## LEGEND

| EXISTING | PROPOSED | DESCRIPTION |
|---|---|---|
| | | PROPERTY LINE |
| ℄ | | CENTERLINE |
| | | FENCE LINE |
| SD | SD | STORM DRAIN |
| SS | SS | SANITARY SEWER |
| G | GAS | GAS |
| W | W | WATER |
| | | VERTICAL CURB |
| | | VERTICAL CURB AND GUTTER |
| | DSO | DOWN SPOUT |
| | | DOWN SPOUT WITH Ssplash BLOCK |
| | | UTILITY BOX –AS NOTED |
| 101.54 | 102.04 / 101.54 | POINT ELEVATION –AS NOTED (TOP OF CURB / FINISHED PAVEMENT OR FINISH GRADE) |
| | | CATCH BASIN (CB) |
| | | PAVEMENT |
| | | FIBER ROLL |
| | | TREE DRIP LINE |

## ABBREVIATIONS

| | | | |
|---|---|---|---|
| AB | AGGREGATE BASE | MH | MAN HOLE |
| AC | ASPHALT CONCRETE | MON | MONUMENT |
| APN | ASSESSORS PARCEL NUMBER | N | NEW |
| BLD | BUILDING | PL | PROPERTY LINE |
| CB | CATCH BASIN | PM | PARCEL MAP |
| CO | CLEAN OUT | PVMT | PAVEMENT |
| CONC | CONCRETE | RD | ROOF DRAIN |
| CP | CONTROL POINT | RIM | TOP OF GRATE |
| DS | DOWN SPOUT | SD | STORM DRAIN |
| DWY | DRIVEWAY | SDMH | STORM DRAIN MANHOLE |
| EX | EXISTING | SS | SANITARY SEWER |
| EM | ELECTRICAL METER | SSCO | SANITARY SEWER CLEANOUT |
| FC | FACE OF CURB | S/W | SIDEWALK |
| FF | FINISH FLOOR | TBM | TEMPORARTY BENCH MARK |
| FG | FINISH GRADE | VG | VALLEY GUTTER |
| FH | FIRE HYDRANT | W | WATER |
| FS | FINISH SURFACE | WDF | WOOD FENCE |
| | GAS/GROUND | WM | WATER METER |
| GM | GAS METER | WV | WATER VALVE |
| INV | PIPE INVERT | | |
| JP | JOINT POLE | | |
| LW | LIGHT WELL | | |

## FOR PLAN CHECK ONLY

These plans are for "plan check only" and as such the State of California Business and Professional Code, Professional Engineers Act Section 6735(a) does not require the plans to be wet stamped and signed. These plans are not final until they are approved for permit at which time they will be wet stamped and signed.

## SITE GRADING QUANTITIES

CUT 20± CY
FILL 20± CY

CUT/ FILL QUANTITIES ARE ESTIMATES ONLY. CONTRACTOR TO MAKE OWN ESTIMATES AS TO REQUIRED CUT AND FILL QUANTITIES.

## SHEET INDEX


SHEET C1 GRADING AND DRAINAGE NOTES & DETAILS
SHEET C2 GRADING & DRAINAGE PLAN


FOR PLANNING APPROVAL ONLY


BAYLAND CONSULTING
www.baylandconsulting.com

BAY LAND CONSULTING
LAND SURVEYORS/CIVIL ENGINEERS
2005 De La Cruz Boulevard, Suite 165
Santa Clara, California 95050
Ph: (408) 296–6000 FAX: (408) 404–5579
EMAIL: Surveyor@baylandconsulting.com
SERVING THE BAY AREA


GRADING AND DRAINAGE PLAN
958 CLINTON ROAD, LOS ALTOS , CA
APN 189–13–034
SANTA CLARA COUNTY

| REVISIONS | |
|---|---|
| DATE | DESCRIPTION |
| △ | |
| △ | |
| △ | |
| △ | |

| | |
|---|---|
| JOB NO. | 14057 |
| SCALE: | 1"=10' |
| DWN: | MC |
| DATE: | 07/17/14 |

SHEET C1 OF 2 SHEETS