CITY OF LOS ALTOS

STANDARD DETAILS

May 2010 Edition

COMMUNITY DEVELOPMENT DEPARTMENT
ENGINEERING DIVISION
One North San Antonio Road
Los Altos, CA 94022
Phone: 650-947-2780
Fax: 650-947-2732

STANDARD DETAILS

TABLE OF CONTENTS

SURFACE

Drawing Number	*Drawing Description*
SU-1	Minimum Street Standard for Residential and Private Streets
SU-2	Minimum Street Standard for Public Cul-De-Sac
SU-3	Downtown Type 'A' Sidewalk
SU-4	Downtown Type 'B' Sidewalk
SU-5	Duck-Out Parking Detail
SU-6	Vertical And Rolled Curb and Gutter
SU-7	Vertical Curb, Asphalt Concrete Berm, and Curb Stamp
SU-8	Sidewalk Cross-Section
SU-9	Driveway Cross-Section
SU-10	Driveway Detail with Planter Strip and Detached Sidewalk
SU-11	Driveway Detail with Attached Sidewalk
SU-12	Street Intersection Valley Gutter and Concrete Apron
SU-13	Street Barricade
SU-14	Survey Monument
SU-15	Street Sign
SU-16	Combined Stop Sign & Street Sign
SU-17	Stop, Warning, and Regulatory Signs
SU-18	Temporary Pedestrian Safety Tunnel
SU-19	Trench Paving, Backfill and Pipe Bedding Sections
SU-20	Shoulder Paving Policy
SU-21	Rolled Curb and Sidewalk Modification at Driveway
SU-22	Parking Stall Details
SU-23	ADA Parking Stall Detail

STORM DRAIN

Drawing Number	*Drawing Description*
SD-1	Storm Drain Manhole (Concentric Cone)
SD-2	Storm Manhole Frame and Cover
SD-3	Storm Manhole Base with Branches
SD-4	Curb Inlet
SD-5	Curb Inlet Gutter Depression
SD-6	3' x 3' Storm Drain Inlet
SD-7	3' X 3' Inlet and Standard Curb Inlet Frame and Grate
SD-8	2' x 2' Storm Drain Inlet
SD-9	2' x 2' Storm Drain Inlet Frame and Grate

STANDARD DETAILS
(cont.)

SANITARY SEWER

Drawing Number	*Drawing Description*
SS-1	Sanitary Sewer Manhole (Concentric Cone)
SS-2	Sanitary Sewer Manhole (Outside Drop)
SS-3	Sanitary Sewer Manhole Frame and Cover
SS-4	Sanitary Sewer Manhole Base with Branches
SS-5	Sewer Lateral and Sewer Riser
SS-6	Sewer Main Clean-Out
SS-7	Sewer Tap
SS-8	Sewer Lateral Division of Responsibility

STREET LIGHTING

Drawing Number	*Drawing Description*
SL-1	Electrolier
SL-2A	Electrolier Pole Base Details (Sheet 1 of 2)
SL-2B	Electrolier Pole Base Details (Sheet 2 of 2)
SL-3	Pull Box
SL-4	Downtown Decorative Electrolier
SL-5	Park Electrolier
SL-6	Bollard Light Detail

LANDSCAPING AND IRRIGATION

Drawing Number	*Drawing Description*
LI-1	Tree Planting and Staking
LI-2	Backflow Prevention Device
LI-3	Backflow Prevention Enclosure
LI-4	Litter Receptacle
LI-5	Picnic Table
LI-6	Park Bench
LI-7	Downtown Bench
LI-8	Park Grill
LI-9	Fixed Bollard
LI-10	Removable Bollard
LI-11	Bicycle Rack Details and Installation Plans
LI-12	Wood Maze Details

EROSION AND SEDIMENT CONTROL

Drawing Number	*Drawing Description*
EC-1	Typical Erosion and Sediment Control at Single Family Construction Site
EC-2	Stabilized Construction Site Entrance
EC-3	Silt Fence
EC-4	Straw Rolls

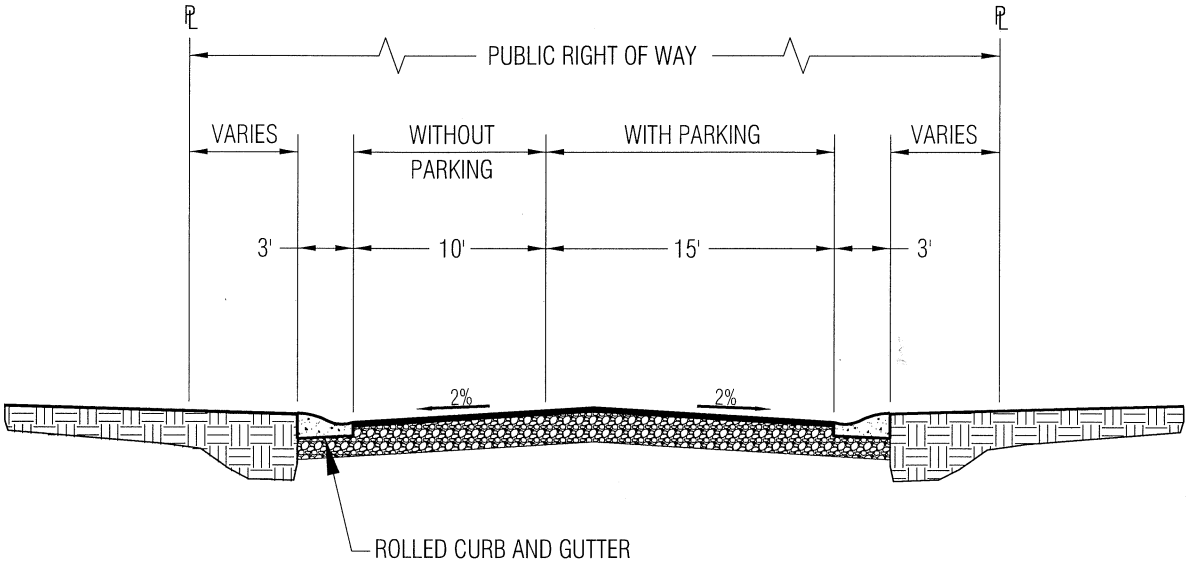

RESIDENTIAL STREET

SCALE: 1" = 10'

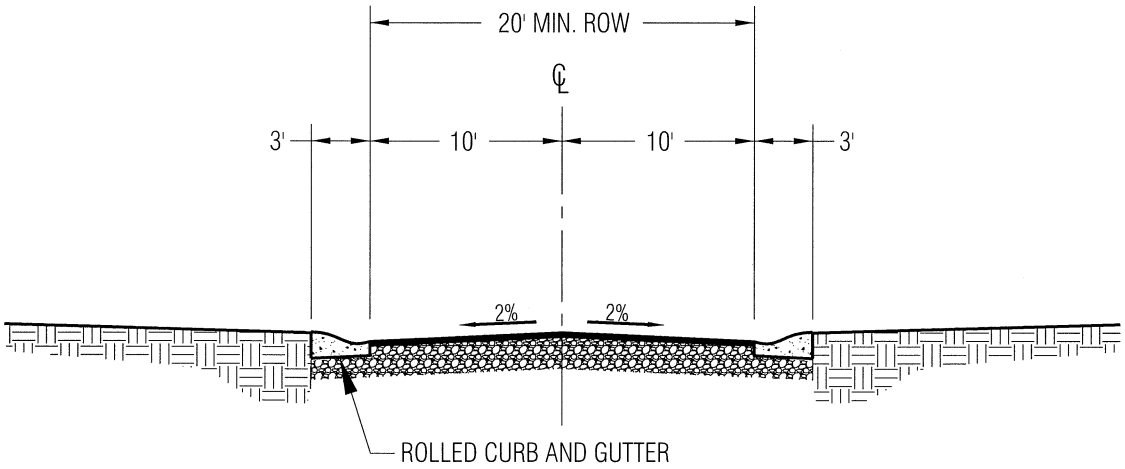

PRIVATE STREET

SCALE: 1" = 10'

NOTES:

1. PRIVATE STREETS ARE ONLY ALLOWED ON CONDOMINIUM, TOWNHOUSE, APARTMENT OR PLANNED UNIT DEVELOPMENTS.

Approved: _____ City Engineer 1/4/10 Date

CITY OF LOS ALTOS · CALIFORNIA · INCORPORATED DECEMBER 1, 1952

REVISION	
Description	Date

ENGINEERING DIVISION

MINIMUM STREET STANDARD FOR RESIDENTIAL AND PRIVATE STREETS

SU-1

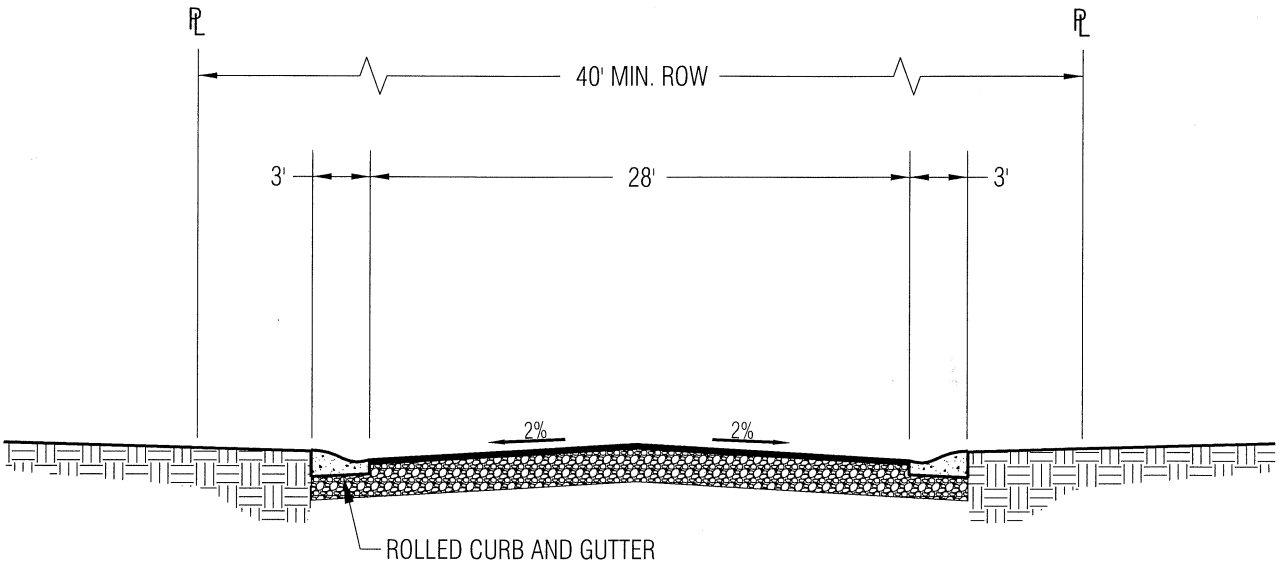

PUBLIC CUL-DE-SAC STREET

SCALE: 1" = 10'

(TWO 10-FT TRAVEL LANES WITH 8-FT PARKING ON ONE SIDE)

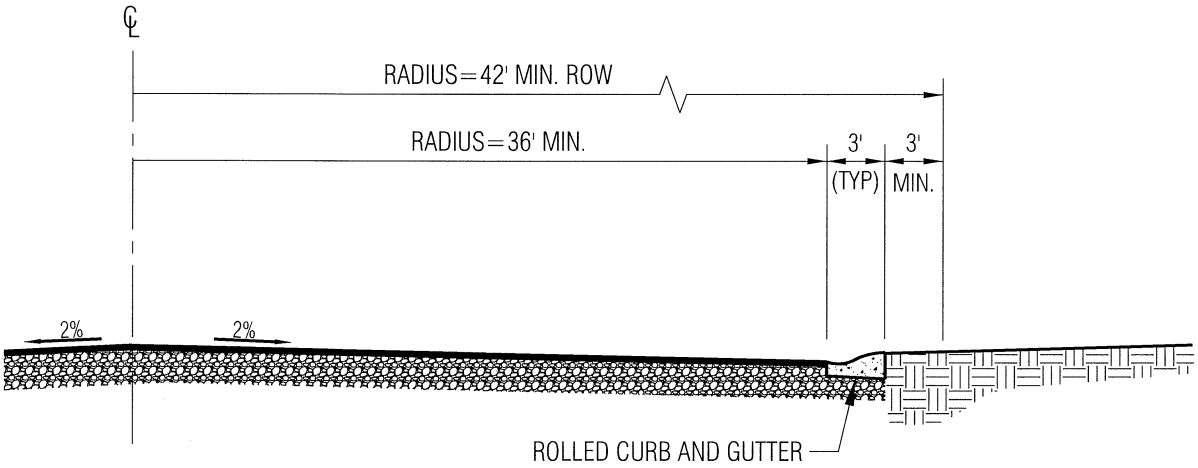

PUBLIC CUL-DE-SAC TURNAROUND

SCALE: 1" = 10'

Approved: _____ City Engineer 1/4/10 Date

REVISION	
Description	Date

ENGINEERING DIVISION

MINIMUM STREET STANDARD FOR PUBLIC CUL-DE-SAC

SU-2

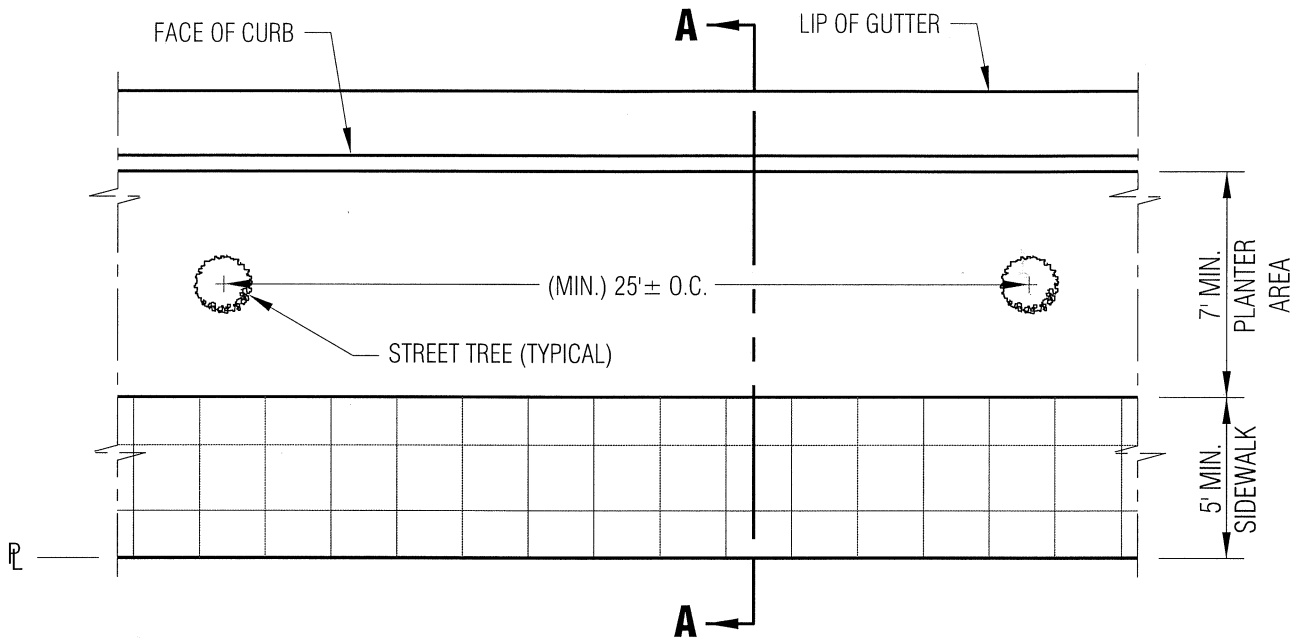

PLAN VIEW

SCALE: 1" = 6'-0"

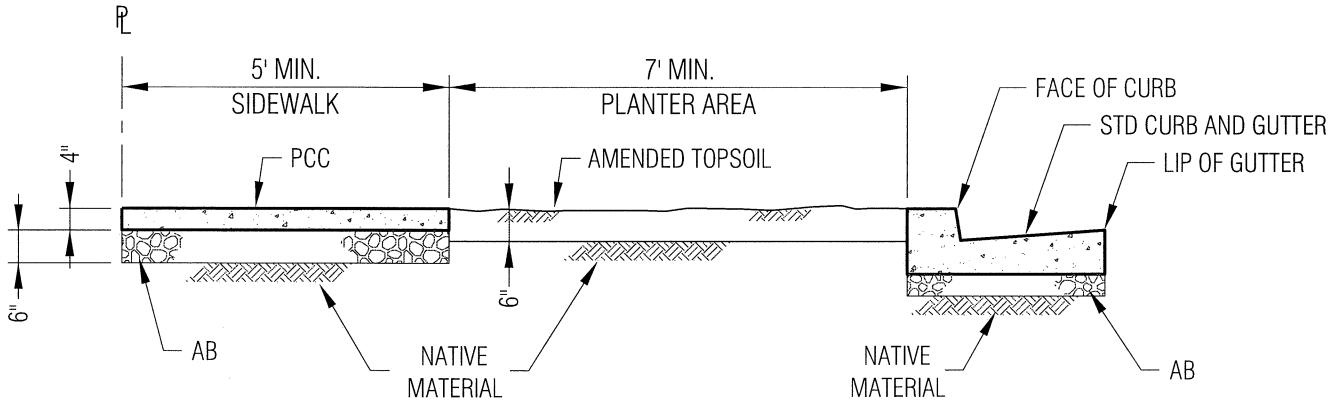

SECTION A-A

SCALE: 1" = 3'-0"

Approved: _____ City Engineer 1/4/10 Date

REVISION		ENGINEERING DIVISION	
Description	Date	DOWNTOWN TYPE 'A' SIDEWALK	SU-3

CITY OF LOS ALTOS · CALIFORNIA · INCORPORATED DECEMBER 1 · 1952

STANDARD DETAILS MAY 2010

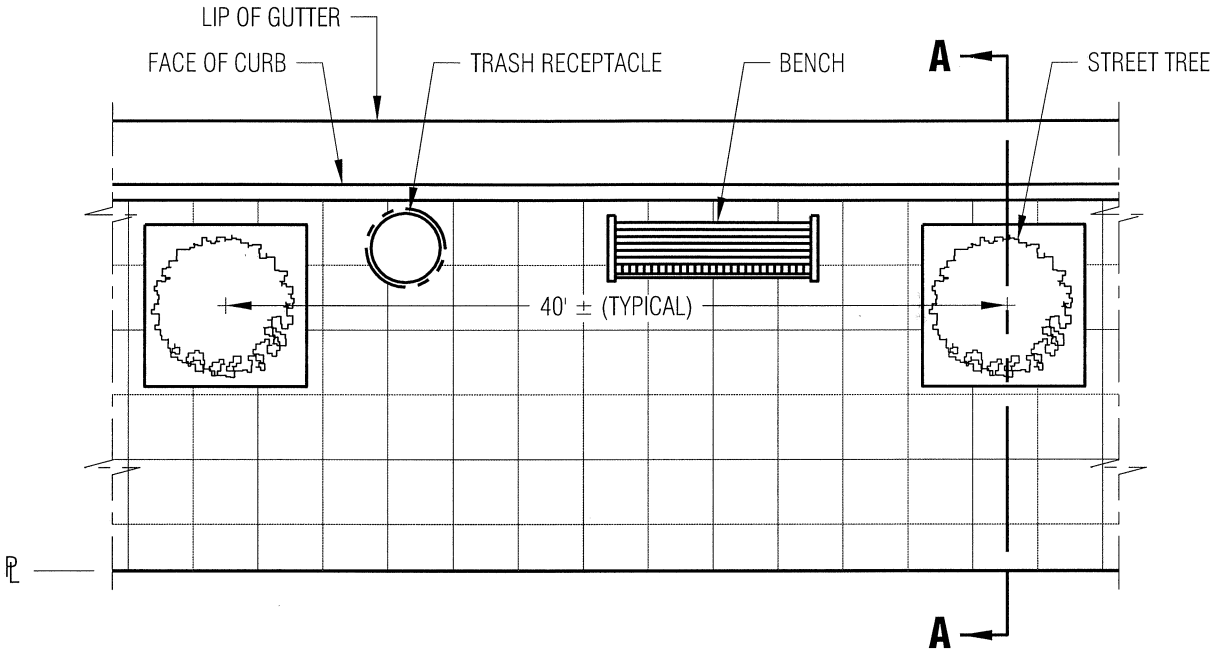

PLAN VIEW

NTS

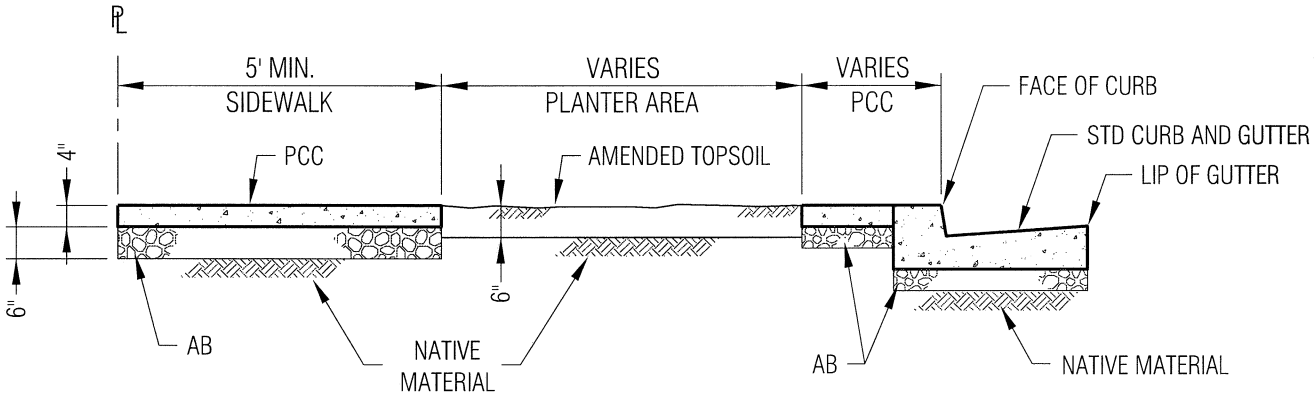

SECTION A-A

SCALE: 1" = 3'-0"

Approved: _____ City Engineer 1/4/10 Date

REVISION	
Description	Date

ENGINEERING DIVISION

DOWNTOWN TYPE 'B' SIDEWALK

SU-4

STANDARD DETAILS MAY 2010

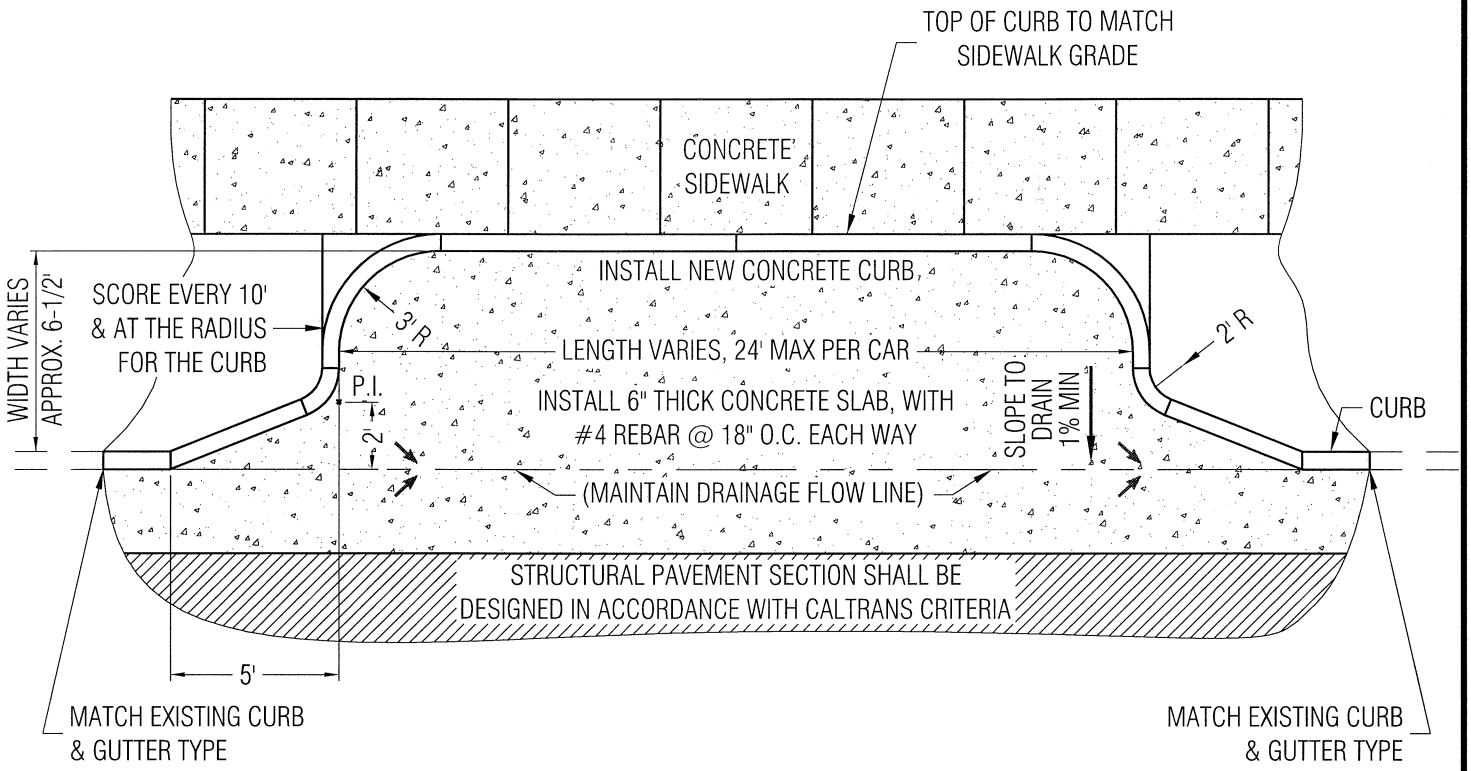

TYPICAL DUCK-OUT PARKING DETAIL

NTS

Approved: _____ City Engineer 1/4/10 Date

REVISION	
Description	Date

ENGINEERING DIVISION

DUCK-OUT PARKING DETAIL

SU-5

STANDARD DETAILS MAY 2010

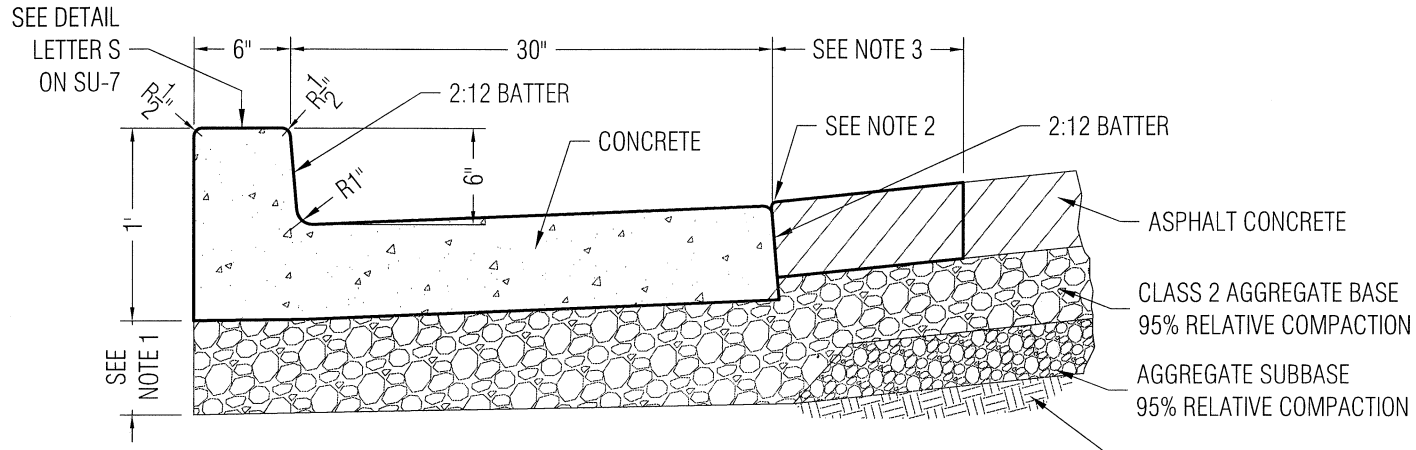

VERTICAL CURB AND GUTTER

SCALE: 1" = 1'

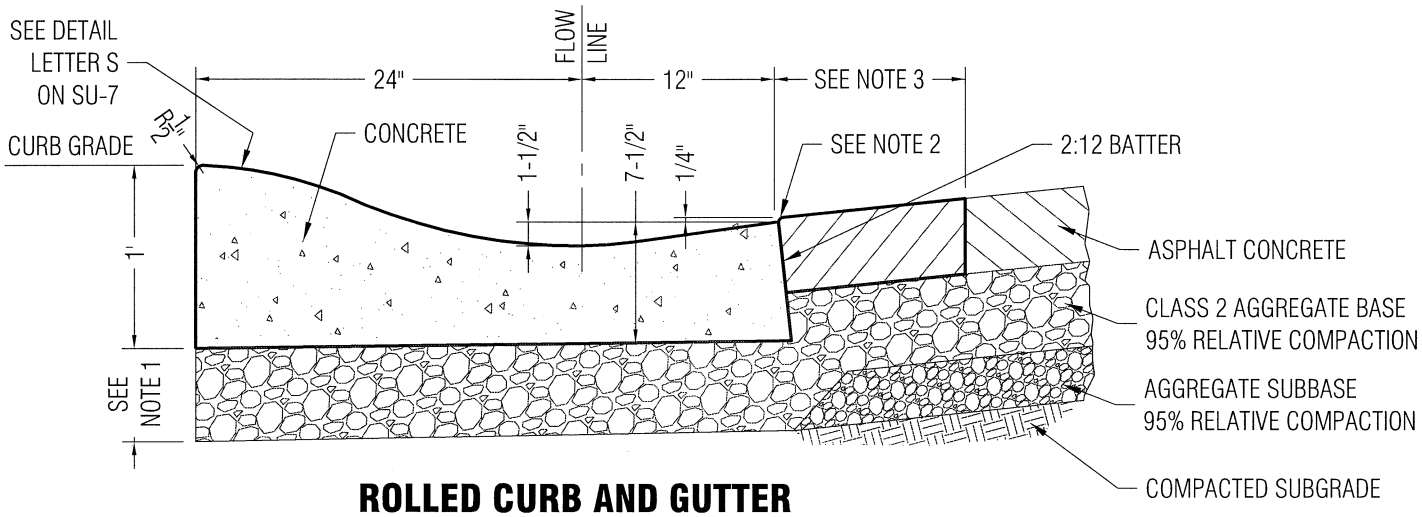

ROLLED CURB AND GUTTER

SCALE: 1" = 1'

NOTES:

1. THICKNESS OF AGGREGATE BASE SHALL BE:
   * FOR NEW STREET SECTION: AS DETERMINED BY EXTENSION OF ROADWAY GRADING PLANE (6" MIN.)

   -OR-

   * FOR EXISTING STREET SECTION: 6"

2. EDGE OF PAVEMENT 1/4" ABOVE LIP (FOR 30" GUTTER, THE LIP SHALL BE 2-1/2" ABOVE FLOWLINE)

3. FOR NEW CURB & GUTTER INSTALLED ADJACENT TO EXISTING PAVEMENT, TWELVE INCHES (12") OF THE AC EDGE SHALL BE SAWCUT, REMOVED AND REPLACED WITH NEW AC PAVEMENT

Approved: _____ City Engineer 1/4/10 Date

CITY OF LOS ALTOS · CALIFORNIA · INCORPORATED DECEMBER 1, 1952

REVISION	
Description	Date

ENGINEERING DIVISION

VERTICAL AND ROLLED CURB AND GUTTER

SU-6

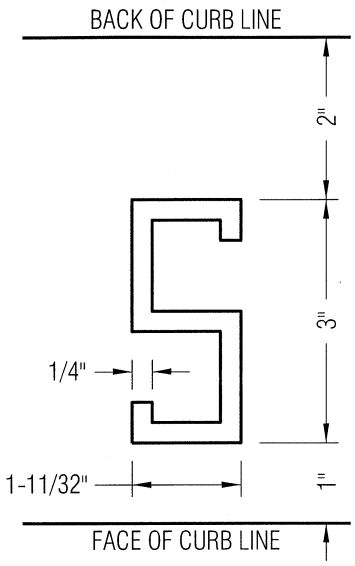

LETTER S

SCALE: NOT TO SCALE

THE LETTER "S" TO BE EMBEDDED 1/4" DEEP ON TOP OF CONCRETE CURB OVER SEWER LATERAL.

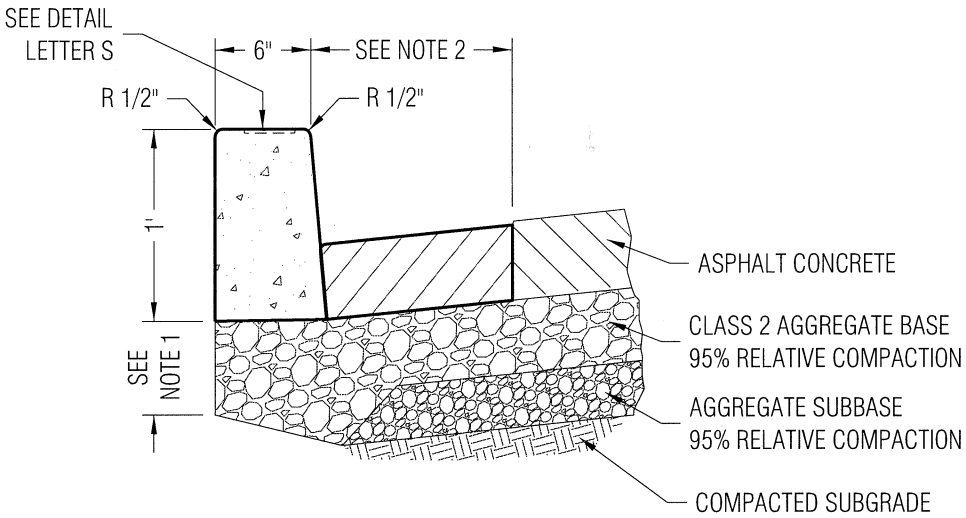

VERTICAL CURB

SCALE: 1" = 1'

NOTES:

1. THICKNESS OF AGGREGATE BASE SHALL BE:
   * FOR NEW STREET SECTION: AS DETERMINED BY EXTENSION OF ROADWAY GRADING PLANE (6" MIN.),
     -OR-
   * FOR EXISTING STREET SECTION: 6"
2. FOR NEW CURB INSTALLED ADJACENT TO EXISTING PAVEMENT, TWELVE INCHES (12") OF THE AC EDGE SHALL BE SAWCUT, REMOVED AND REPLACED WITH NEW AC PAVEMENT

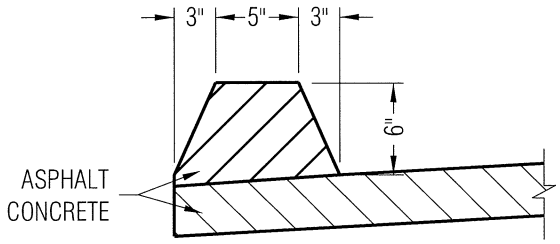

AC CONCRETE BERM

SCALE: 1" = 1'

Approved: _____ City Engineer 1/4/10 Date

CITY OF LOS ALTOS · CALIFORNIA · INCORPORATED DECEMBER 1 · 1952

REVISION	
Description	Date

ENGINEERING DIVISION

VERTICAL CURB, ASPHALT CONCRETE BERM AND CURB STAMP

SU-7

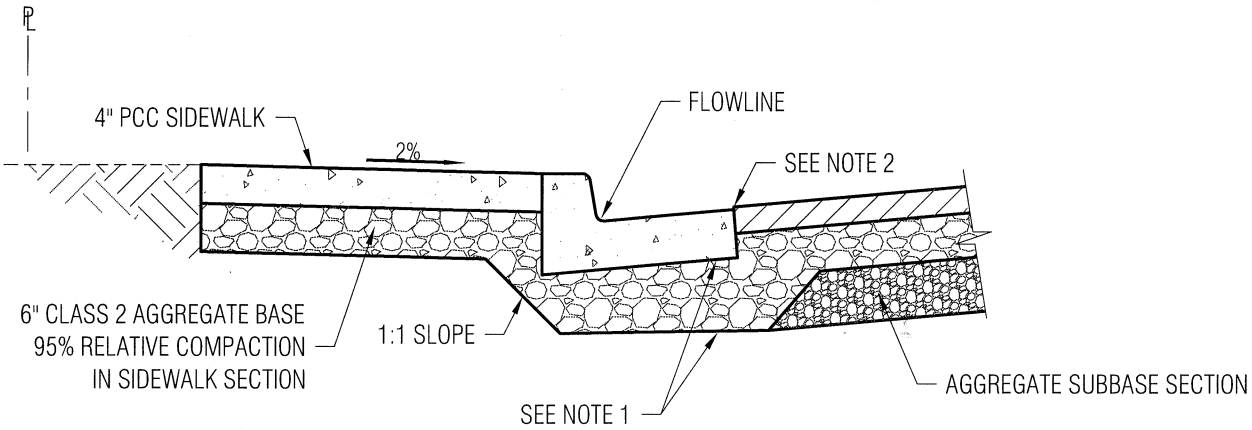

SECTION THROUGH STANDARD SIDEWALK AND VERTICAL CURB

SCALE: NOT TO SCALE

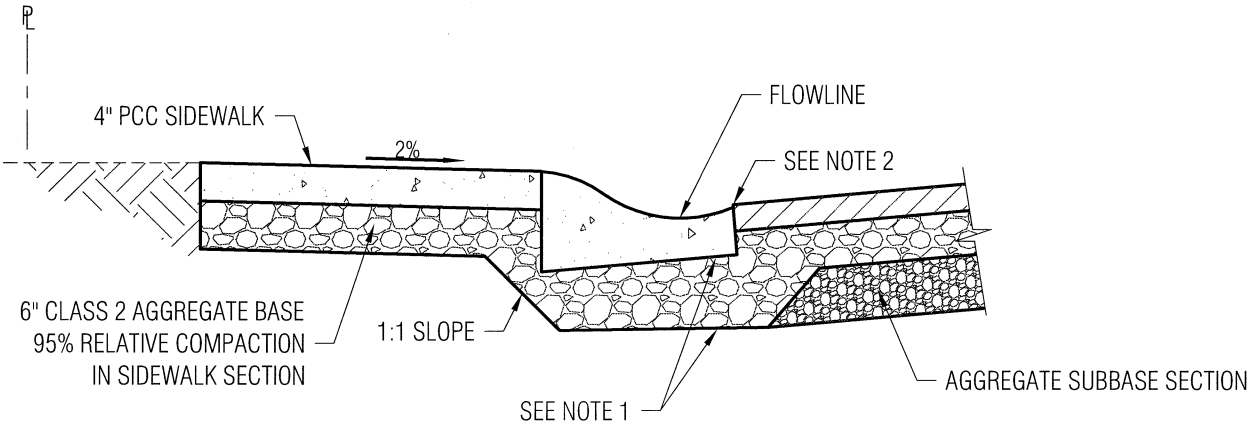

SECTION THROUGH STANDARD SIDEWALK AND ROLLED CURB

SCALE: NOT TO SCALE

STANDARD CROSS SECTIONS

NOTES:

1. THICKNESS OF AGGREGATE BASE UNDER CURB & GUTTER SHALL BE:
   * FOR NEW STREET SECTION: AS DETERMINED BY EXTENSION OF ROADWAY GRADING PLANE (6" MIN.)

   OR

   * FOR EXISTING STREET SECTION: 6"
2. SEE VERTICAL CURB AND ROLLED CURB AND GUTTER DETAIL SU-6

Approved: _____ City Engineer 1/4/10 Date

CITY OF LOS ALTOS · CALIFORNIA · INCORPORATED DECEMBER 1, 1952

REVISION	
Description	Date

ENGINEERING DIVISION

SIDEWALK CROSS-SECTION

SU-8

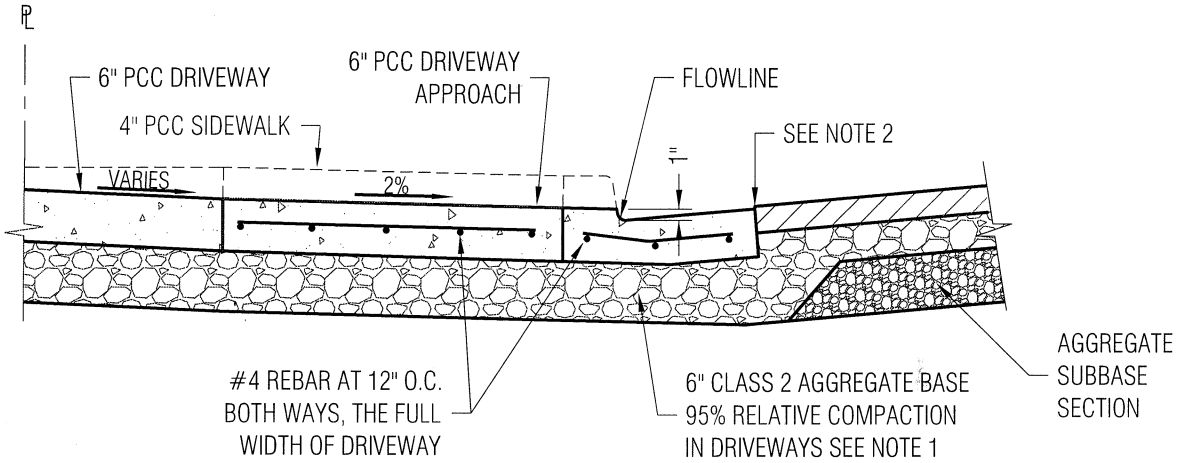

SECTION THROUGH STANDARD DRIVEWAY APPROACH WITH VERTICAL CURB

SCALE: NOT TO SCALE

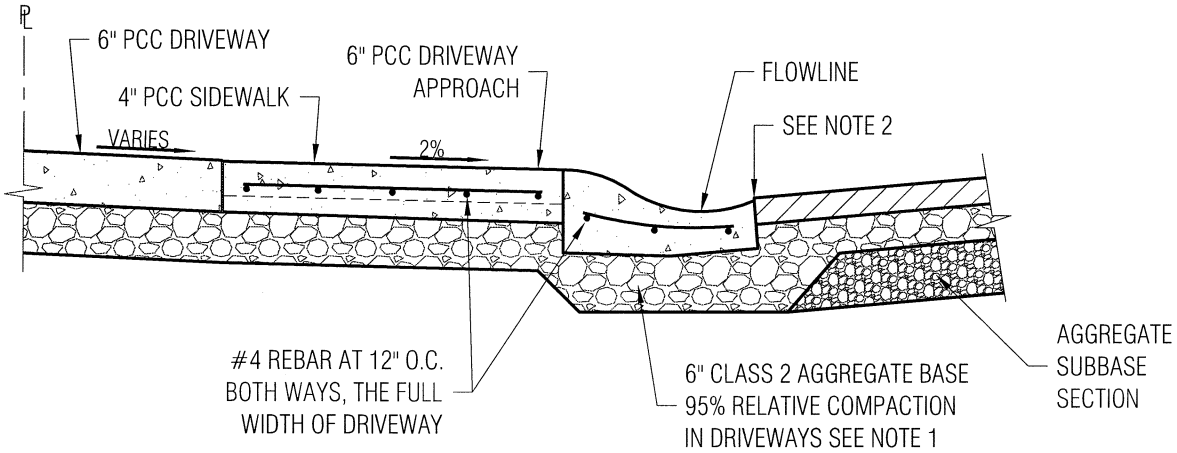

SECTION THROUGH STANDARD DRIVEWAY APPROACH WITH ROLLED CURB

SCALE: NOT TO SCALE

STANDARD CROSS SECTIONS

NOTES:

1. THICKNESS OF AGGREGATE BASE UNDER CURB & GUTTER SHALL BE:
   * FOR NEW STREET SECTION: AS DETERMINED BY EXTENSION OF ROADWAY GRADING PLANE (6" MIN.)

   OR

   * FOR EXISTING STREET SECTION: 6"
2. SEE VERTICAL CURB AND ROLLED CURB AND GUTTER DETAIL SU-6

Approved: _____ City Engineer 1/4/10 Date

REVISION	
Description	Date

ENGINEERING DIVISION

DRIVEWAY CROSS-SECTION

SU-9

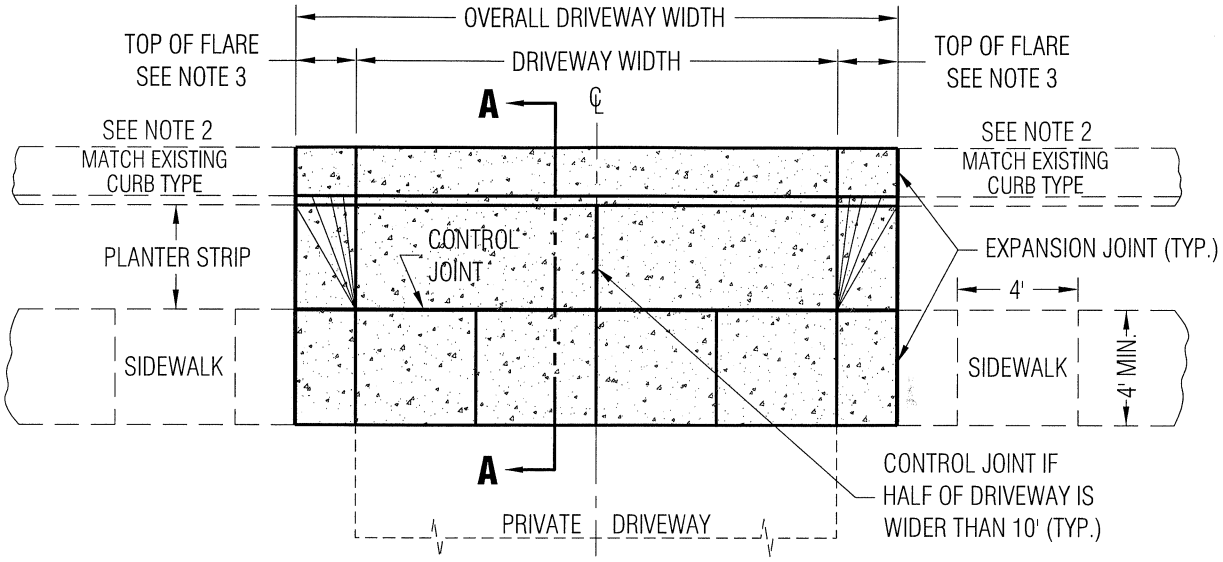

PLAN

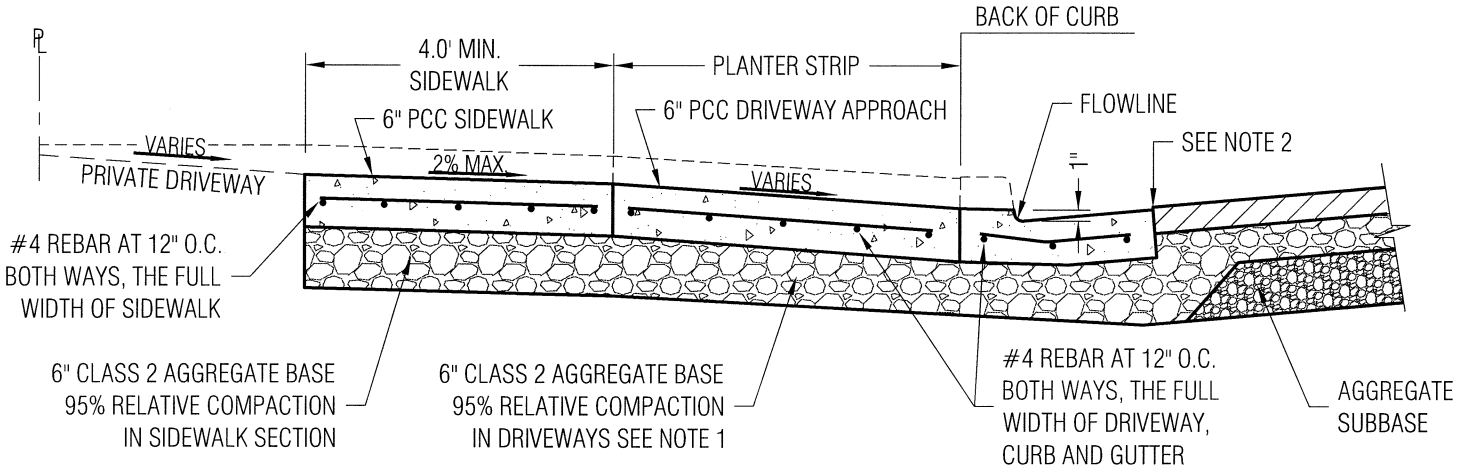

SECTION A-A

DETACHED SIDEWALK

SCALE: NOT TO SCALE

NOTES:

1. THICKNESS OF AGGREGATE BASE UNDER CURB AND GUTTER SHALL BE:
   * FOR NEW STREET SECTION: AS DETERMINED BY EXTENSION OF ROADWAY GRADING PLANE (6" MIN.) OR
   * FOR EXISTING STREET SECTION: 6"
2. SEE VERTICAL CURB AND ROLLED CURB AND GUTTER DETAIL SU-6
3. DRIVEWAY FLARE WIDTH:
   1.5' FOR RESIDENTIAL
   3.0' FOR COMMERCIAL & INDUSTRIAL
   MUST BE ADA COMPLIANT

Approved: _____ City Engineer 1/4/10 Date

CITY OF LOS ALTOS · CALIFORNIA · INCORPORATED DECEMBER 1, 1952

REVISION	
Description	Date

ENGINEERING DIVISION

DRIVEWAY DETAIL WITH PLANTER STRIP AND DETACHED SIDEWALK

SU-10

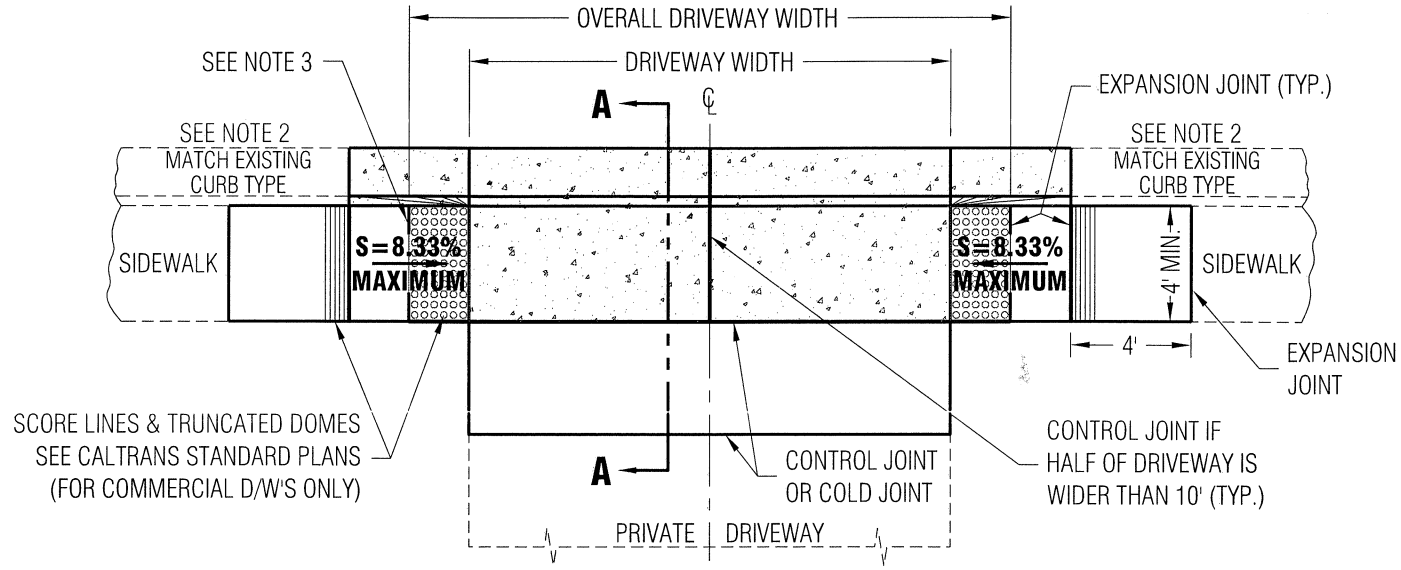

PLAN

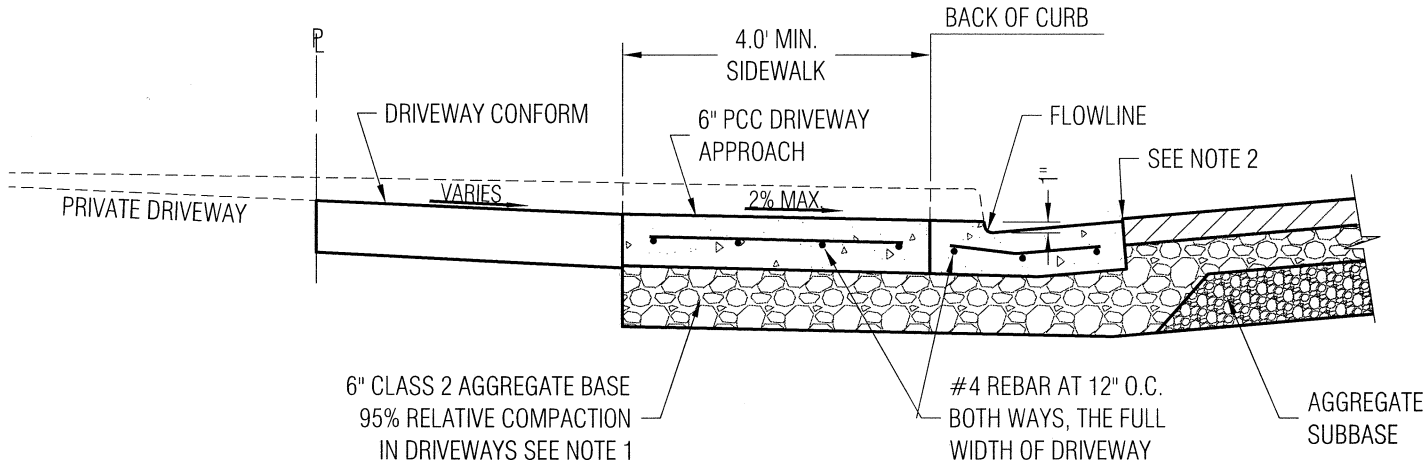

SECTION A-A

ATTACHED CURB, GUTTER AND SIDEWALK

SCALE: NOT TO SCALE

NOTES:

1. THICKNESS OF AGGREGATE BASE UNDER CURB AND GUTTER SHALL BE:
   * FOR NEW STREET SECTION: AS DETERMINED BY EXTENSION OF ROADWAY GRADING PLANE (6" MIN.)
   -OR-
   * FOR EXISTING STREET SECTION: 6"
2. SEE VERTICAL CURB AND ROLLED CURB AND GUTTER DETAIL SU-6
3. DRIVEWAY FLARE WIDTH:
   1.5' FOR RESIDENTIAL
   3.0' FOR COMMERCIAL & INDUSTRIAL

Approved: _____ City Engineer 1/4/10 Date

CITY OF LOS ALTOS · CALIFORNIA · INCORPORATED DECEMBER 1, 1952

REVISION	
Description	Date

ENGINEERING DIVISION

DRIVEWAY DETAIL WITH ATTACHED SIDEWALK

SU-11

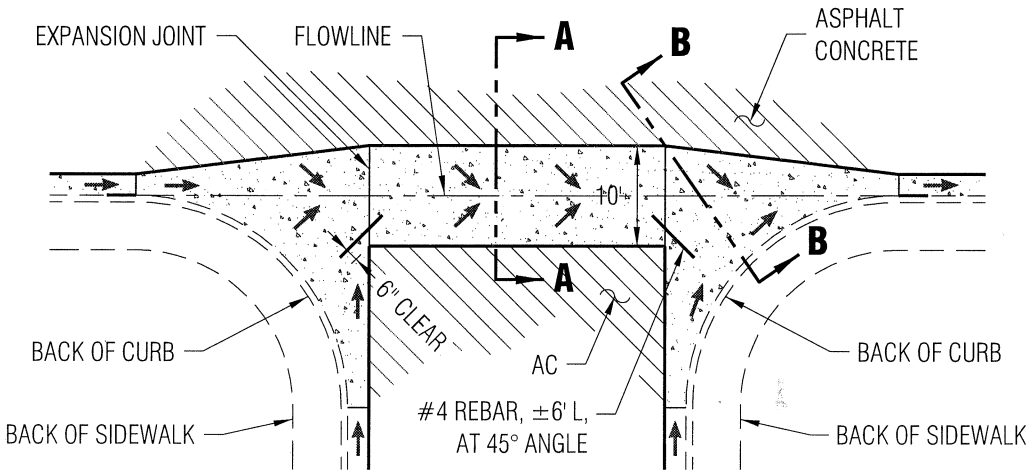

CONCRETE APRON AND VALLEY GUTTER

NTS

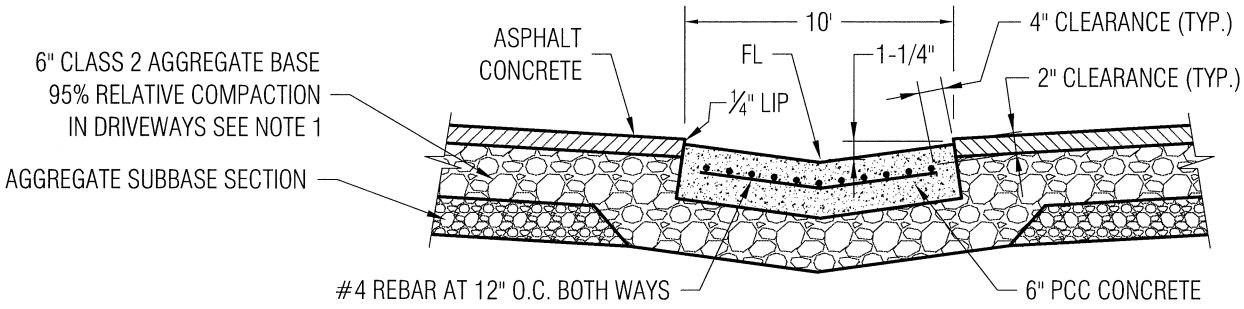

SECTION A-A - VALLEY GUTTER

NTS

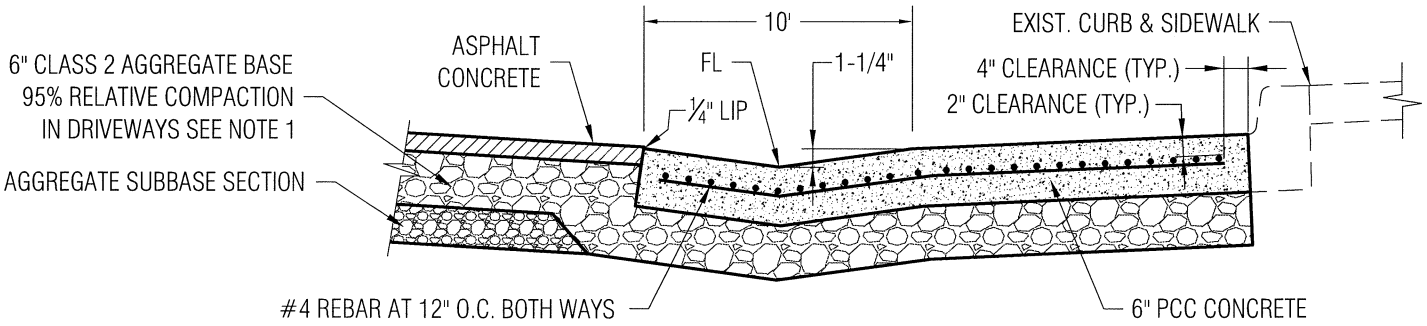

SECTION B-B - CONCRETE APRON

NTS

NOTES: 1. THICKNESS OF AGGREGATE BASE UNDER THE GUTTER SHALL BE:
* FOR NEW STREET SECTION: AS DETERMINED BY EXTENSION OF ROADWAY GRADING PLANE (6" MIN.), OR
* FOR EXISTING STREET SECTION: 6"

Approved: _____ City Engineer 1/4/10 Date

REVISION	
Description	Date

ENGINEERING DIVISION

STREET INTERSECTION VALLEY GUTTER AND CONCRETE APRON

SU-12

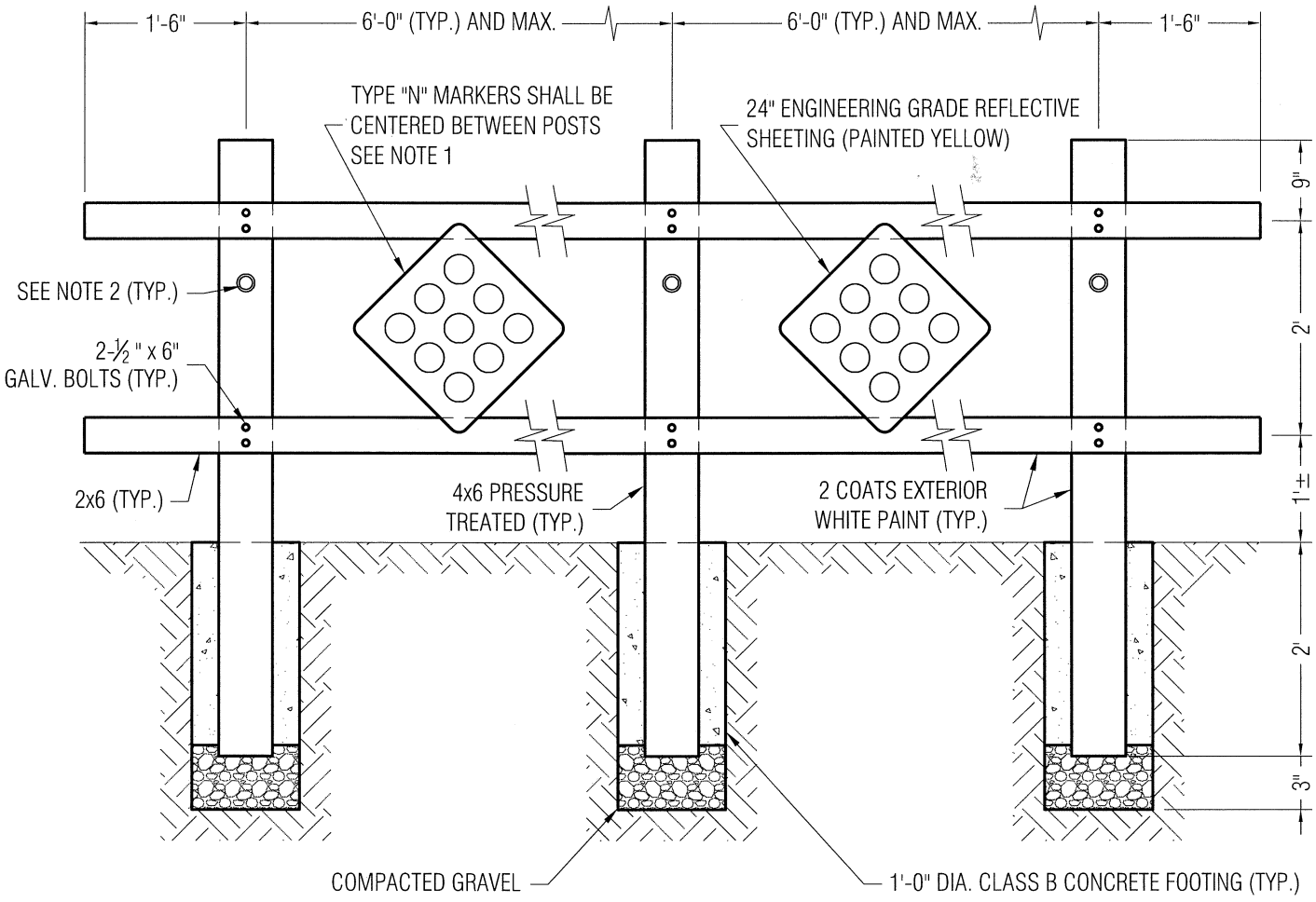

DRAWING: NOT TO SCALE

NOTES:

1. TYPE N-4 MARKERS (CALTRANS) WITH AMBER PLASTIC REFLECTORS FOR BARRICADE ON THE SIDES OF THE STREET.
   TYPE N-5 MARKERS WITH RED PLASTIC REFLECTORS FOR BARRICADE AT THE DEAD-END OF THE STREET.

2. AMBER PLASTIC DISK FOR BARRICADE ON THE SIDES OF THE STREET.
   RED PLASTIC DISK BARRICADE AT DEAD-END OF STREET.

Approved: _____ City Engineer 1/4/10 Date

CITY OF LOS ALTOS · CALIFORNIA · INCORPORATED DECEMBER 1, 1952

REVISION	
Description	Date

ENGINEERING DIVISION

STREET BARRICADE

SU-13

FRAME AND COVER - EMPIRE FOUNDARY CO. NO. MN-78, PHOENIX IRON WORKS NO P-2001, OR APPROVED EQUAL OVER MONUMENT. FRAME AND COVER TO BE SET IN CONCRETE AFTER PAVING.

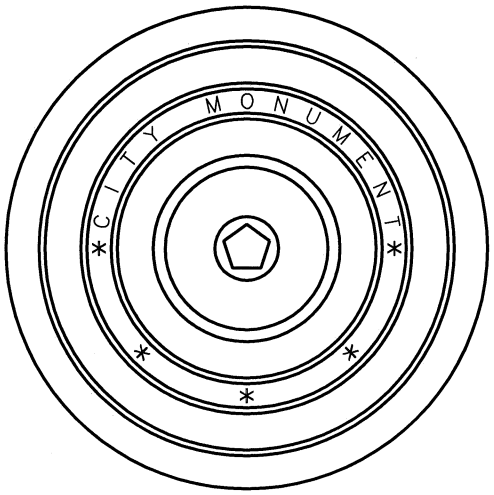

SURVEYOR'S NOTE:
EXACT POINT TO BE DETERMINED BY SURVEY AND CLEARLY PUNCHED IN TOP BRASS MARKER TOGETHER WITH ENGINEER'S R.C.E. OR SURVEYOR'S R.L.S. NUMBER IN 1/8" HIGH NUMERALS

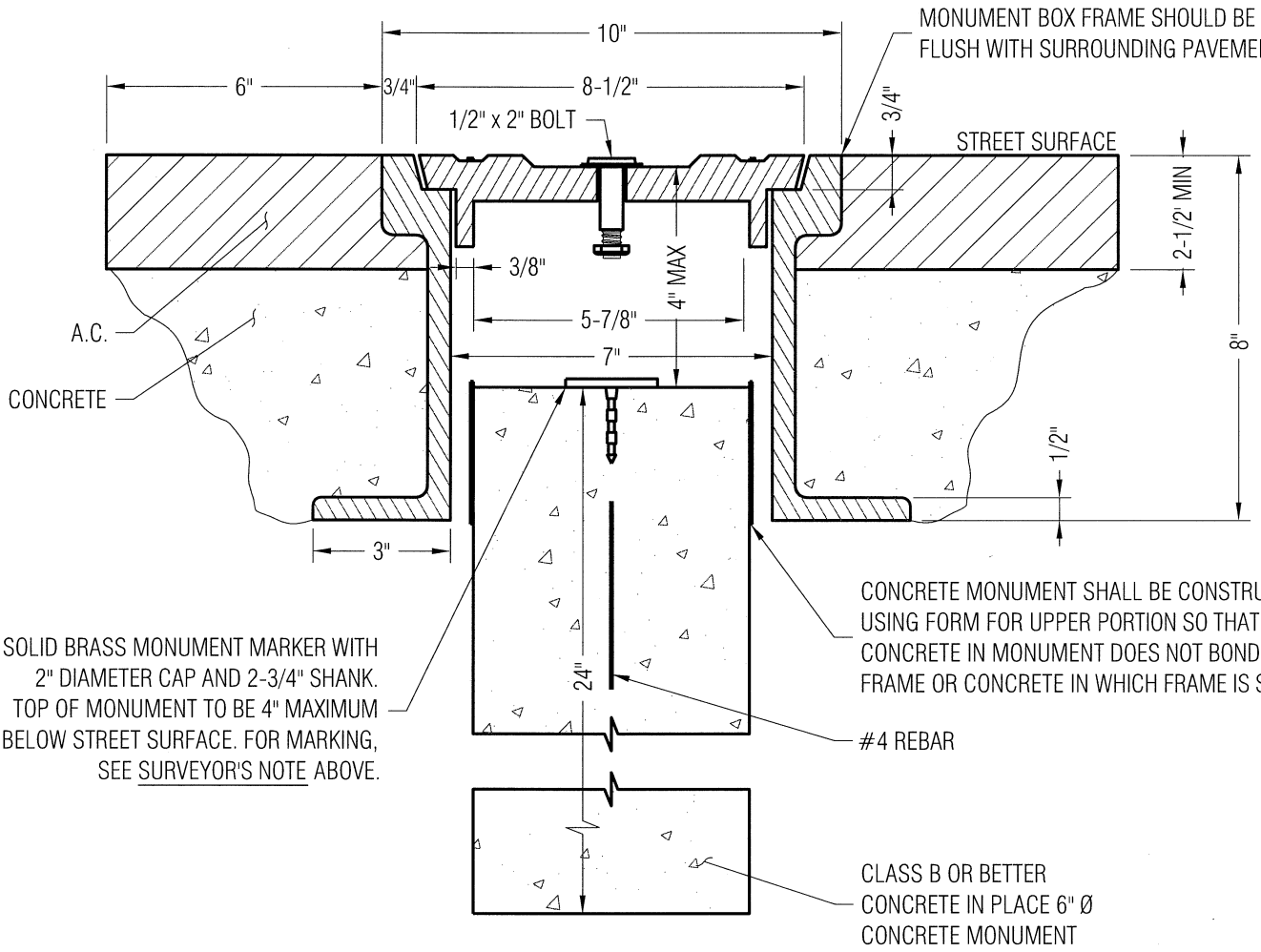

Approved: _____ City Engineer 1/4/10 Date

REVISION	
Description	Date

ENGINEERING DIVISION

SURVEY MONUMENT

SU-14

STANDARD DETAILS MAY 2010

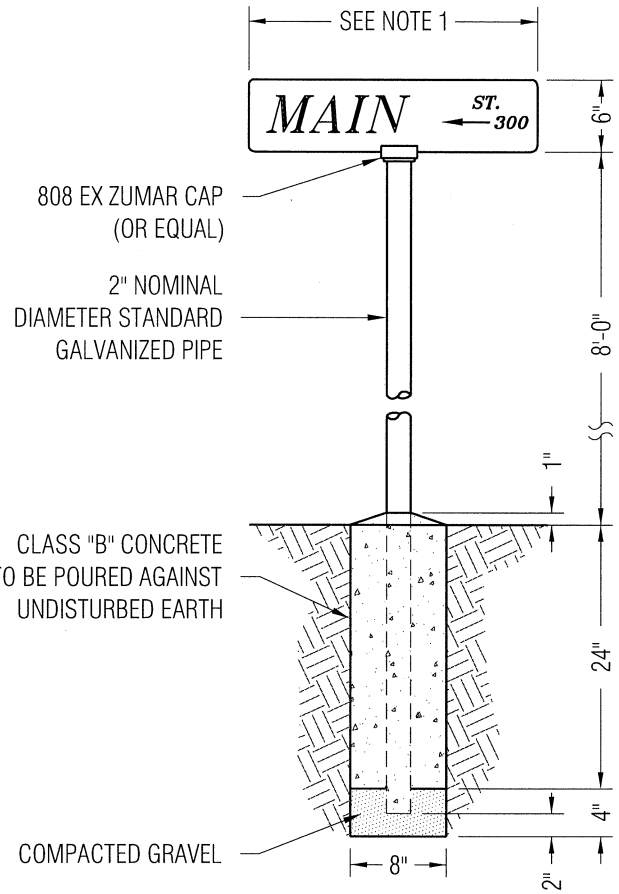

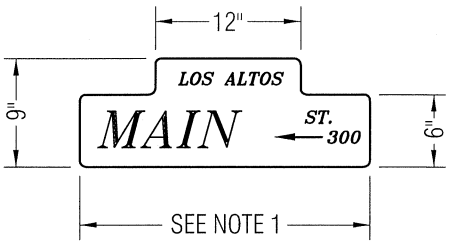

ABOVE PLATE TO BE USED AT CITY LIMITS
WITH "LOS ALTOS" IN 2" LETTERS

STANDARD STREET SIGN

SCALE: NOT TO SCALE

NOTES:

1. PLATES TO BE 0.080 GAUGE ALUMINUM, WIDTH VARIES IN 6" INCREMENTS FROM A MINIMUM OF 24" TO A MAXIMUM OF 36" x 6" IN HEIGHT. CORNER RADIUS IS 0.5", WITHOUT HOLES.
2. SIGN IS SINGLE PLATE, DOUBLE FACE, WITH 3M WHITE 3290 ENGINEER GRADE REFLECTIVE SHEETING OVERLAYED BY 3M 1179 TRANSPARENT FILM FOR OPAQUE BROWN BACKGROUND. LETTERS ARE 3M 3290 WHITE REFLECTIVE ENGINEER GRADE SHEETING APPLIED OVER THE 1179 FILM.
3. LETTER STYLE IS GARAMOND BOLD ITALIC CONDENSED. 4" ALL UPPERCASE FOR STREET NAME; 2" ALL UPPERCASE FOR SUFFIX & BLOCK NUMBER. SUFFIX IS CENTERED OVER "ARROW" AND BLOCK NUMBER WITH 0.75" SPACE BETWEEN LINES.

Approved: _____ City Engineer 1/4/10 Date

REVISION	
Description	Date

ENGINEERING DIVISION

STREET SIGN

SU-15

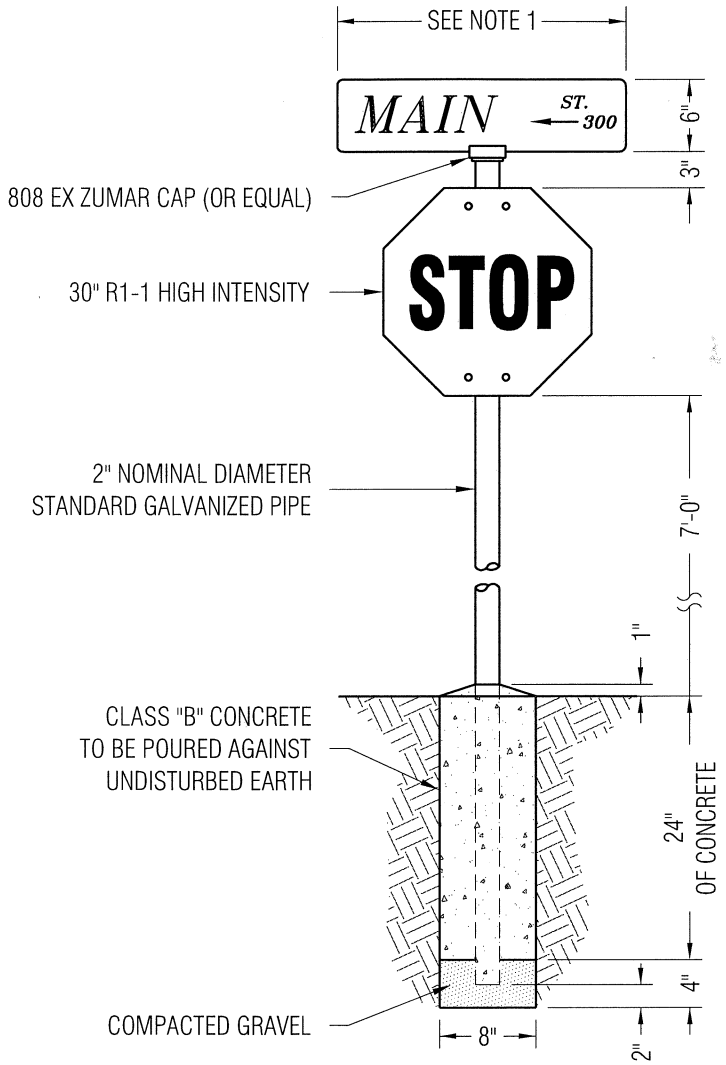

COMBINED STOP SIGN & STREET SIGN

SCALE: NOT TO SCALE

NOTES:

1. PLATES TO BE 0.080 GAUGE ALUMINUM, WIDTH VARIES IN 6" INCREMENTS FROM A MINIMUM OF 24" TO A MAXIMUM OF 36" x 6" IN HEIGHT. CORNER RADIUS IS 0.5", WITHOUT HOLES.
2. SIGN IS SINGLE PLATE, DOUBLE FACE, WITH 3M WHITE 3290 ENGINEER GRADE REFLECTIVE SHEETING OVERLAYED BY 3M 1179 TRANSPARENT FILM FOR OPAQUE BROWN BACKGROUND. LETTERS ARE 3M 3290 WHITE REFLECTIVE ENGINEER GRADE SHEETING APPLIED OVER THE 1179 FILM.
3. LETTER STYLE IS GARAMOND BOLD ITALIC CONDENSED. 4" ALL UPPERCASE FOR STREET NAME; 2" ALL UPPERCASE FOR SUFFIX & BLOCK NUMBER. SUFFIX IS CENTERED OVER "ARROW" AND BLOCK NUMBER WITH 0.75" SPACE BETWEEN LINES.
4. STOP SIGN SHALL BE INSTALLED WITH TWO MOUNTING BRACKETS USING U-BOLTS AND THEFT-PROOF BOLTS.

Approved: _____ 1/4/10
City Engineer Date

CITY OF LOS ALTOS · CALIFORNIA · INCORPORATED DECEMBER 1 · 1952

REVISION	
Description	Date

ENGINEERING DIVISION

COMBINED STOP SIGN & STREET SIGN

SU-16

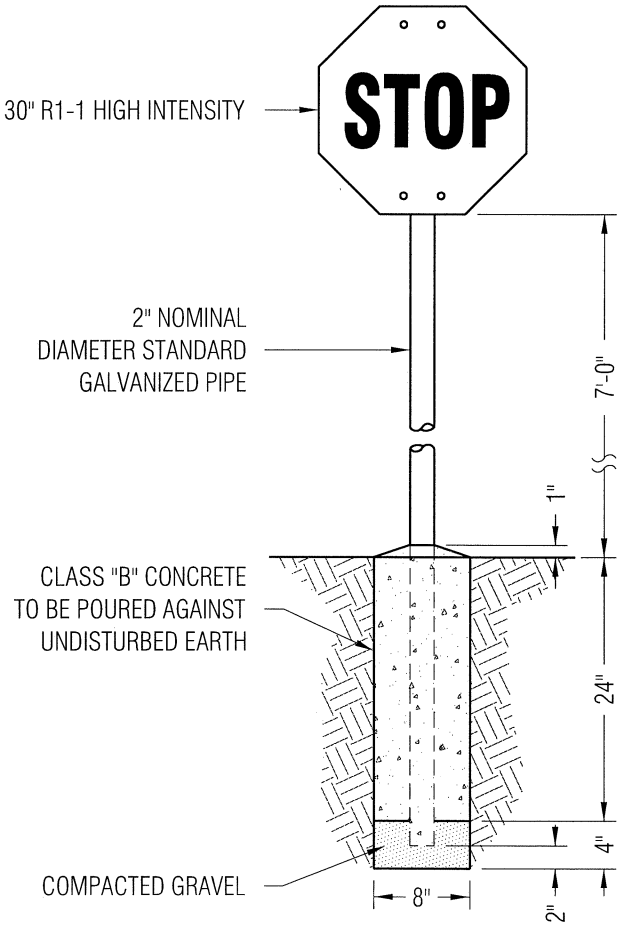

STANDARD STOP SIGN

SCALE: NOT TO SCALE

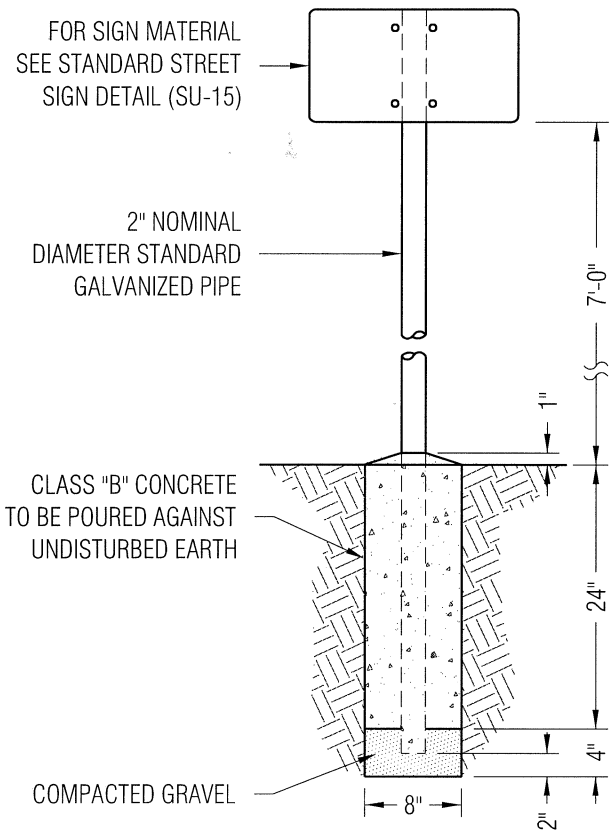

WARNING & REGULATORY SIGNS

SCALE: NOT TO SCALE

NOTES:

1. STOP SIGN SHALL BE 30" R1-1 HIGH INTENSITY.

2. SIGNS SHALL BE INSTALLED WITH TWO MOUNTING BRACKETS USING U-BOLTS AND THEFT-PROOF BOLTS.

Approved: _____ City Engineer 1/4/10 Date

CITY OF LOS ALTOS · CALIFORNIA · INCORPORATED DECEMBER 1 · 1952

REVISION	
Description	Date

ENGINEERING DIVISION

STOP, WARNING AND REGULATORY SIGNS

SU-17

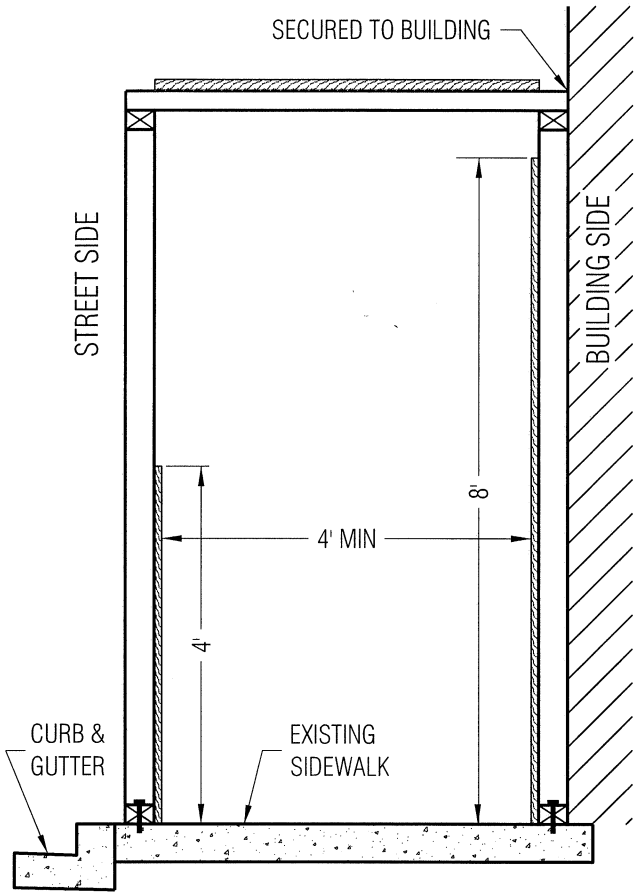

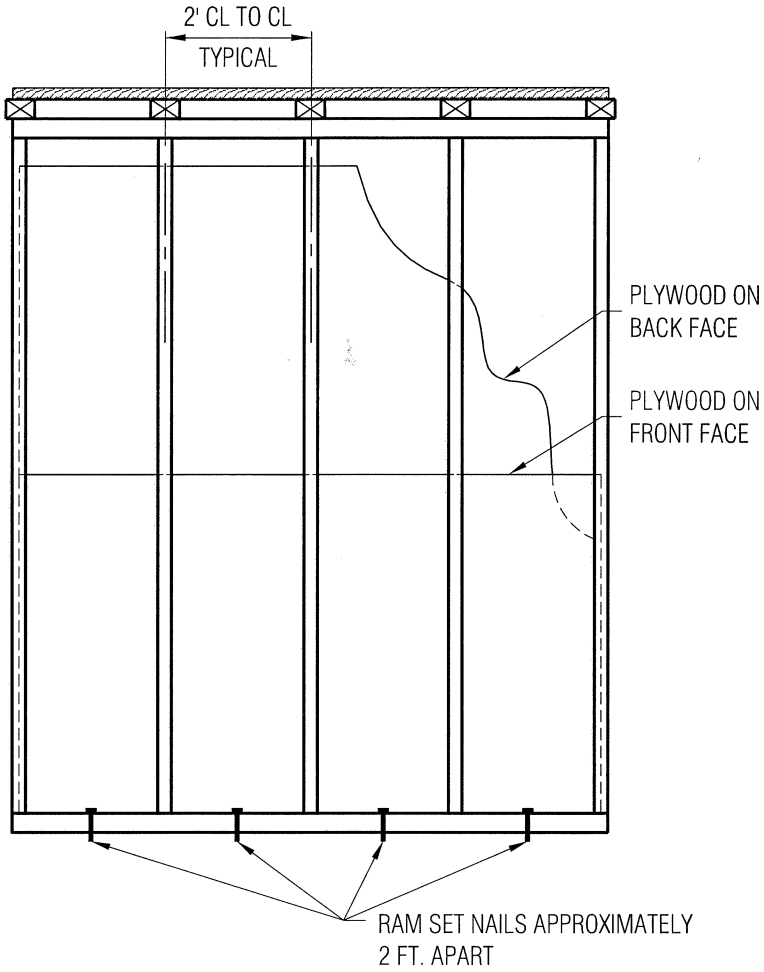

END VIEW **FRONT VIEW**

NOTES:

1. PEDESTRIAN SAFETY TUNNEL TO BE EXTENDED A MINIMUM OF 8 FT. BEYOND SCAFFOLDING.

2. ALL HOLES RESULTING FROM RAM SET NAILS IN EXISTING SIDEWALK MUST BE FILLED TO THE SATISFACTION OF THE CITY ENGINEER.

3. PEDESTRIAN TUNNEL TO BE MADE FROM THE FOLLOWING MATERIAL:
   a. 2x4 DOUGLAS FIR #2 GRADE OR BETTER.
   b. 4' x 8' x 1/2" CDX PLYWOOD, EXTERIOR GRADE FOR SIDES AND 3/4" FOR TOP.

4. CONSTRUCTION OF TUNNEL TO MEET OSHA & ALL OTHER GOVERNING CODES.

Approved: _____ City Engineer 1/4/10 Date

CITY OF LOS ALTOS · CALIFORNIA · INCORPORATED DECEMBER 1, 1952

REVISION	
Description	Date

ENGINEERING DIVISION

TEMPORARY PEDESTRIAN SAFETY TUNNEL

SU-18

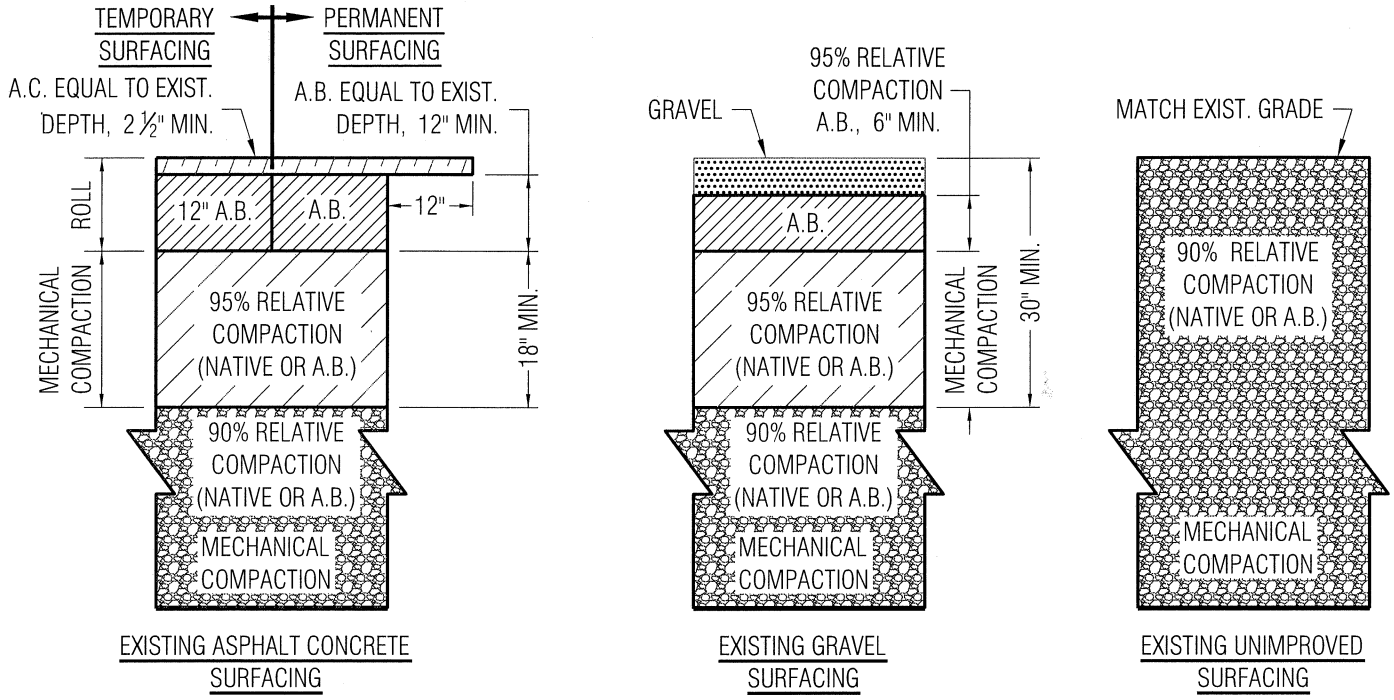

TRENCH PAVING SECTIONS

NOTE:
1. CONTROL DENSITY BACKFILL (CDF) MAY BE USED UPON APPROVAL BY CITY ENGINEER (SEE STANDARD SPECS)

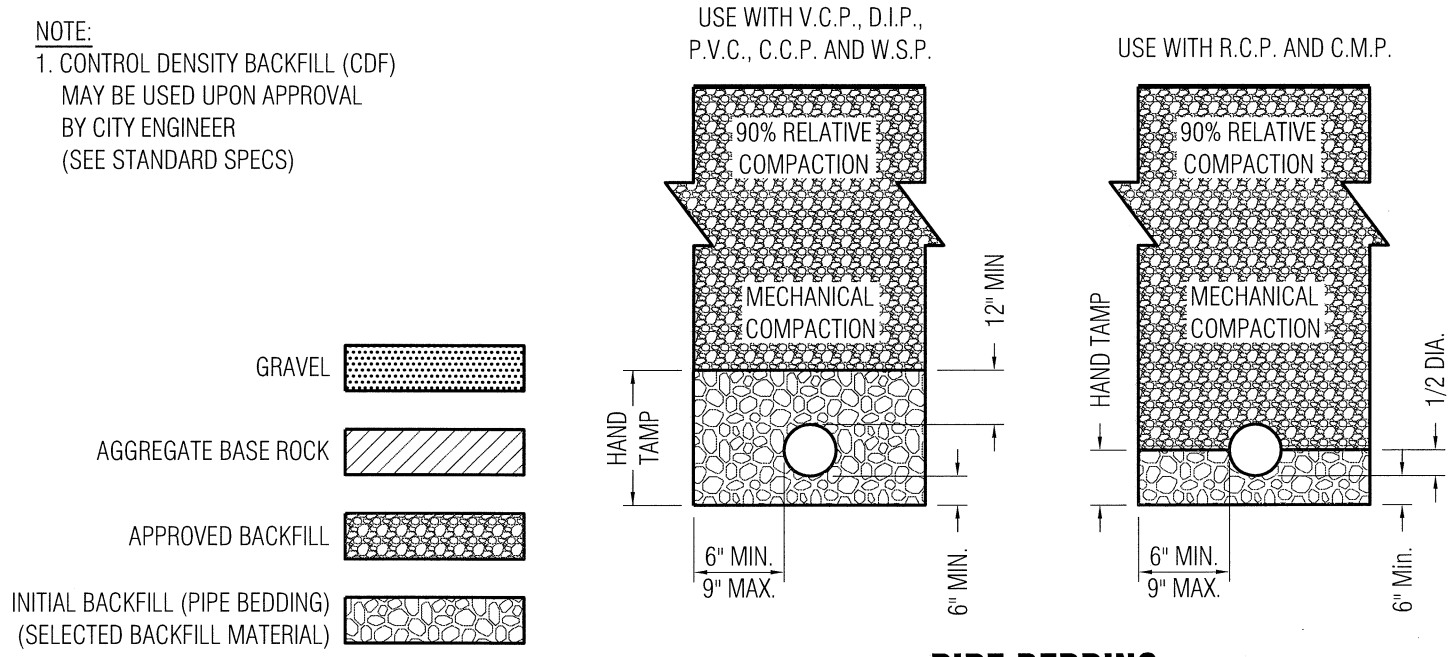

PIPE BEDDING

Approved: _____ City Engineer 1/4/10 Date

CITY OF LOS ALTOS · CALIFORNIA · INCORPORATED DECEMBER 1, 1952

REVISION	
Description	Date

ENGINEERING DIVISION

TRENCH PAVING, BACKFILL AND PIPE BEDDING SECTIONS

SU-19

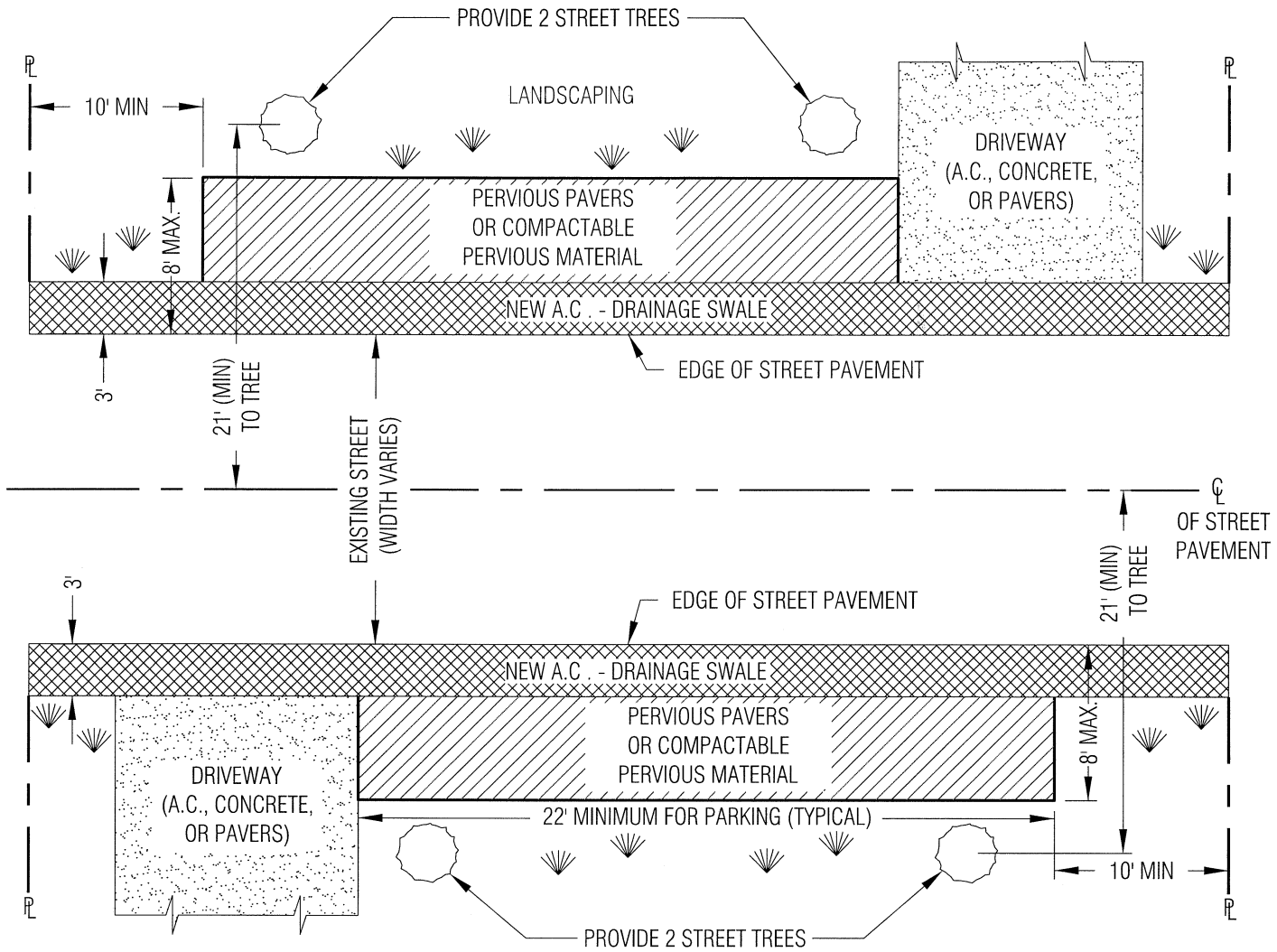

PLAN VIEW

NOTES:

1. **IF THE STREET PAVEMENT WIDTH IS 36 FEET OR GREATER,** NO SHOULDER IMPROVEMENTS ARE PERMITTED WITH THE EXCEPTION OF LANDSCAPING AND IRRIGATION.
2. POLICY DOES NOT APPLY FOR REPAIRS, RESEALING, AND REPAVING IN KIND OF EXISTING SHOULDERS, NOR DOES IT REQUIRE THAT SHOULDERS MUST BE PAVED.
3. THE SHOULDER OF A NEWLY CONSTRUCTED OR 50% OR GREATER SQUARE FOOTAGE REMODELED RESIDENCE IS REQUIRED TO BE BROUGHT INTO COMPLIANCE WITH THIS POLICY.

LEGEND:

- A.C. ASPHALT CONCRETE
- PL PROPERTY LINE
- ℄ CENTERLINE
- EXISTING OR NEW LANDSCAPING
- STREET TREE (NEW OR EXISTING)
- NEW PERMEABLE SURFACE
- NEW A.C. - DRAINAGE SWALE

Approved: _____ City Engineer 1/4/10 Date

CITY OF LOS ALTOS · CALIFORNIA · INCORPORATED DECEMBER 1, 1952

REVISION	
Description	Date

ENGINEERING DIVISION

SHOULDER PAVING POLICY

SU-20

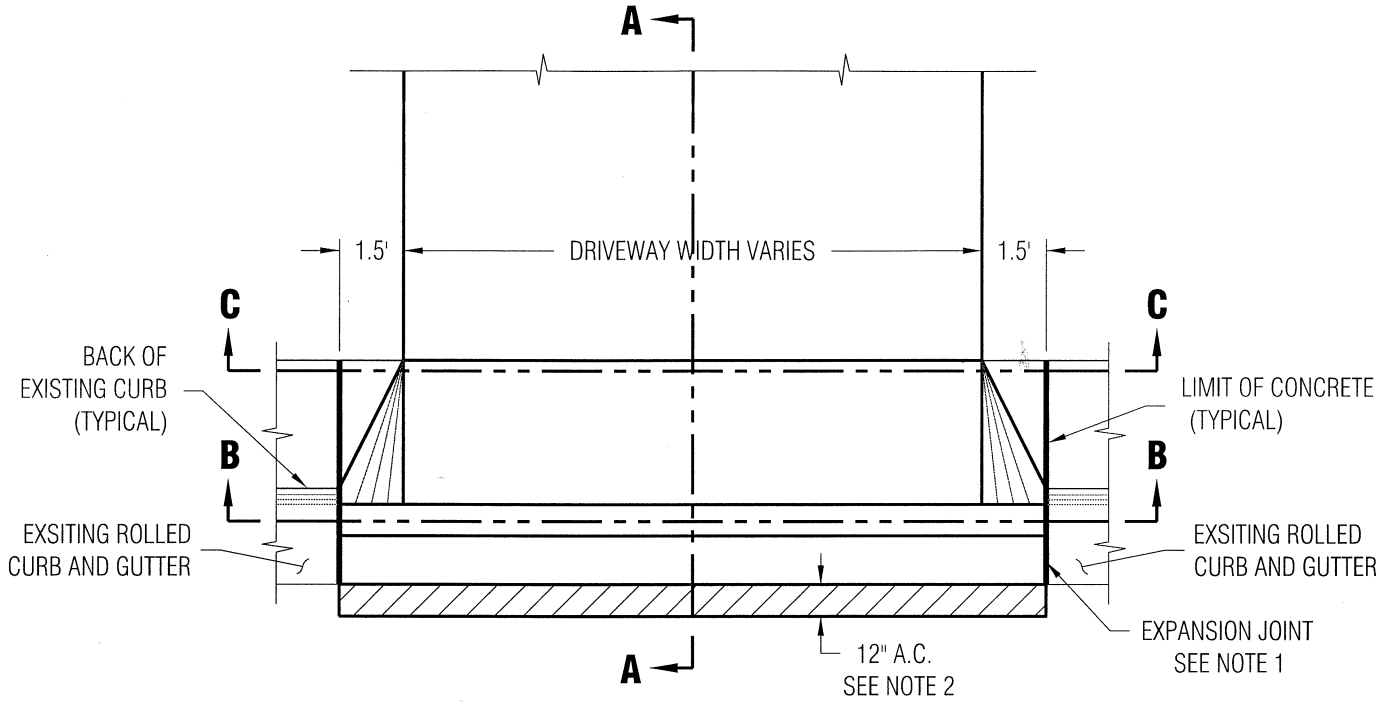

PLAN VIEW

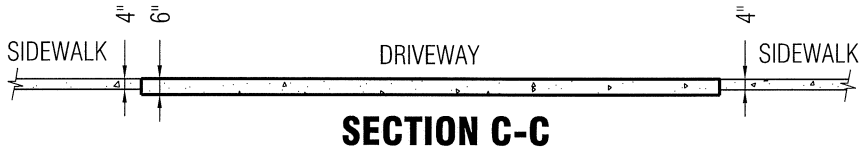

SECTION C-C

SECTION B-B

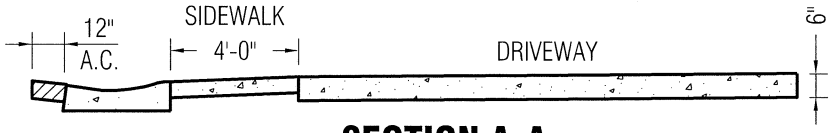

SECTION A-A

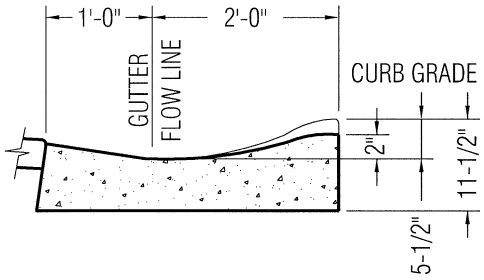

MODIFIED ROLLED CURB

NOTES:

1. SAW CUT TO THE NEXT SCORE MARK AS DETERMINED BY THE ENGINEER.
2. SAW CUT AND REMOVE EXISTING PAVEMENT SECTION. REPLACE WITH NEW CL2 A.B. ROCK AND MIN. 3" A.C. AFTER CONCRETE FORMS HAVE BEEN REMOVED.

Approved: _____ City Engineer 1/4/10 Date

CITY OF LOS ALTOS · CALIFORNIA · INCORPORATED DECEMBER 1, 1952

REVISION	
Description	Date

ENGINEERING DIVISION

ROLLED CURB AND SIDEWALK MODIFICATION AT DRIVEWAY

SU-21

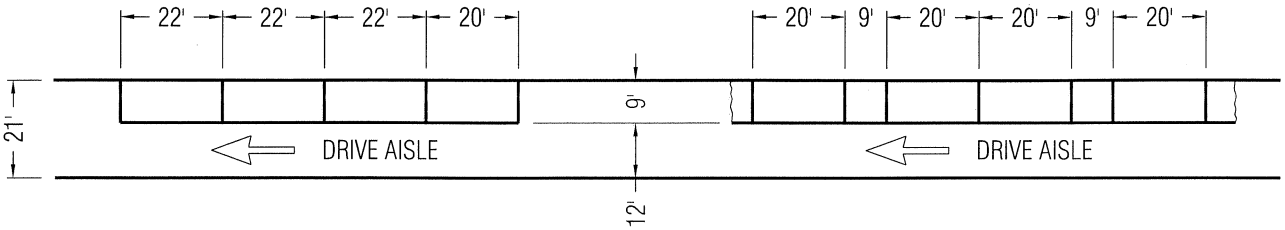

PARALLEL PARKING ALTERNATES

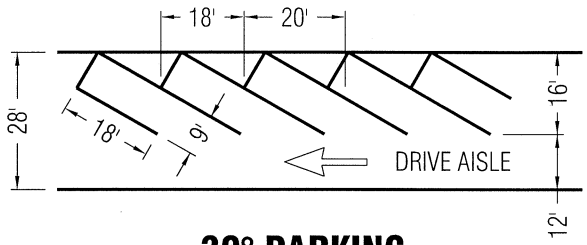

30° PARKING

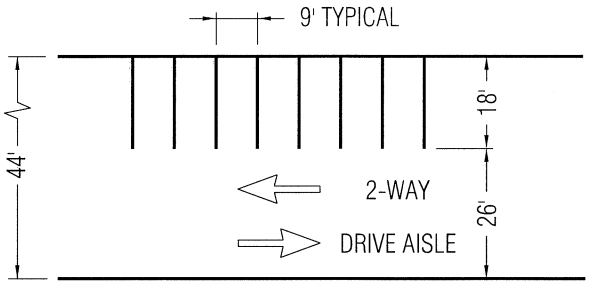

90° PARKING

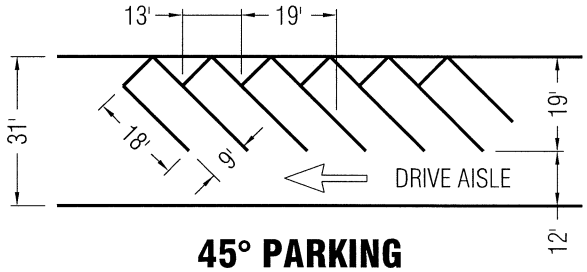

45° PARKING

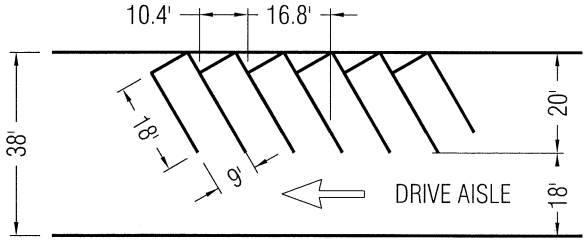

60° PARKING

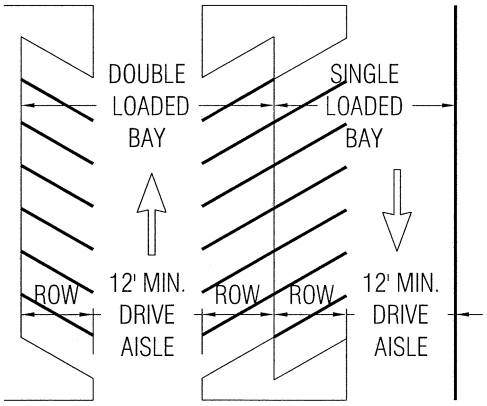

ONE WAY

Approved: _____ City Engineer 1/4/10 Date

REVISION		ENGINEERING DIVISION	
Description	Date	PARKING STALL DETAILS	SU-22

CITY OF LOS ALTOS · CALIFORNIA · INCORPORATED DECEMBER 1, 1952

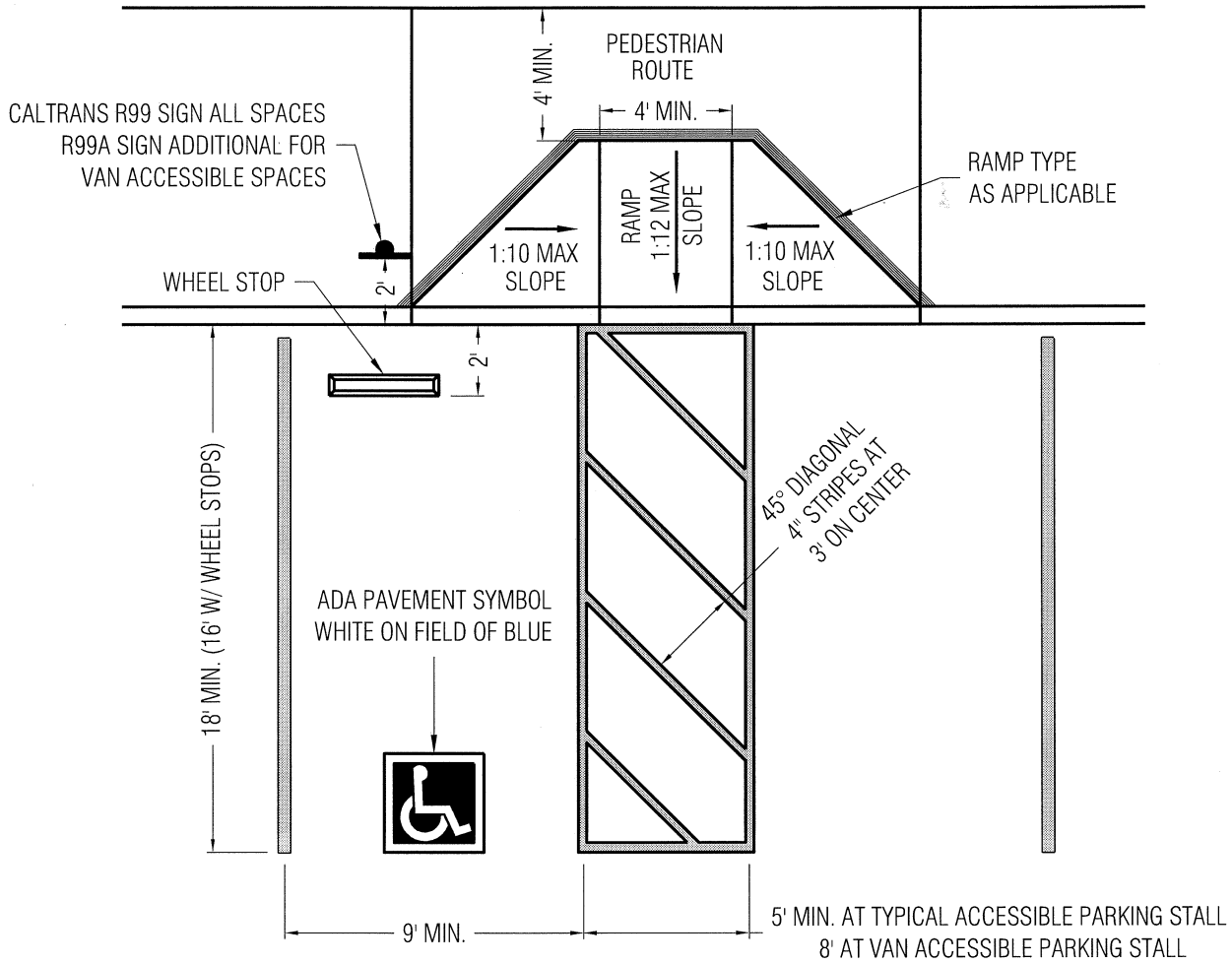

NOTE:
REFER TO CALTRANS STANDARD DRAWINGS FOR ALL OTHER ACCESSIBLE PARKING DETAILS.

Approved: _____ City Engineer 1/4/10 Date

REVISION	
Description	Date

ENGINEERING DIVISION

ADA PARKING STALL DETAILS

SU-23

STANDARD DETAILS MAY 2010

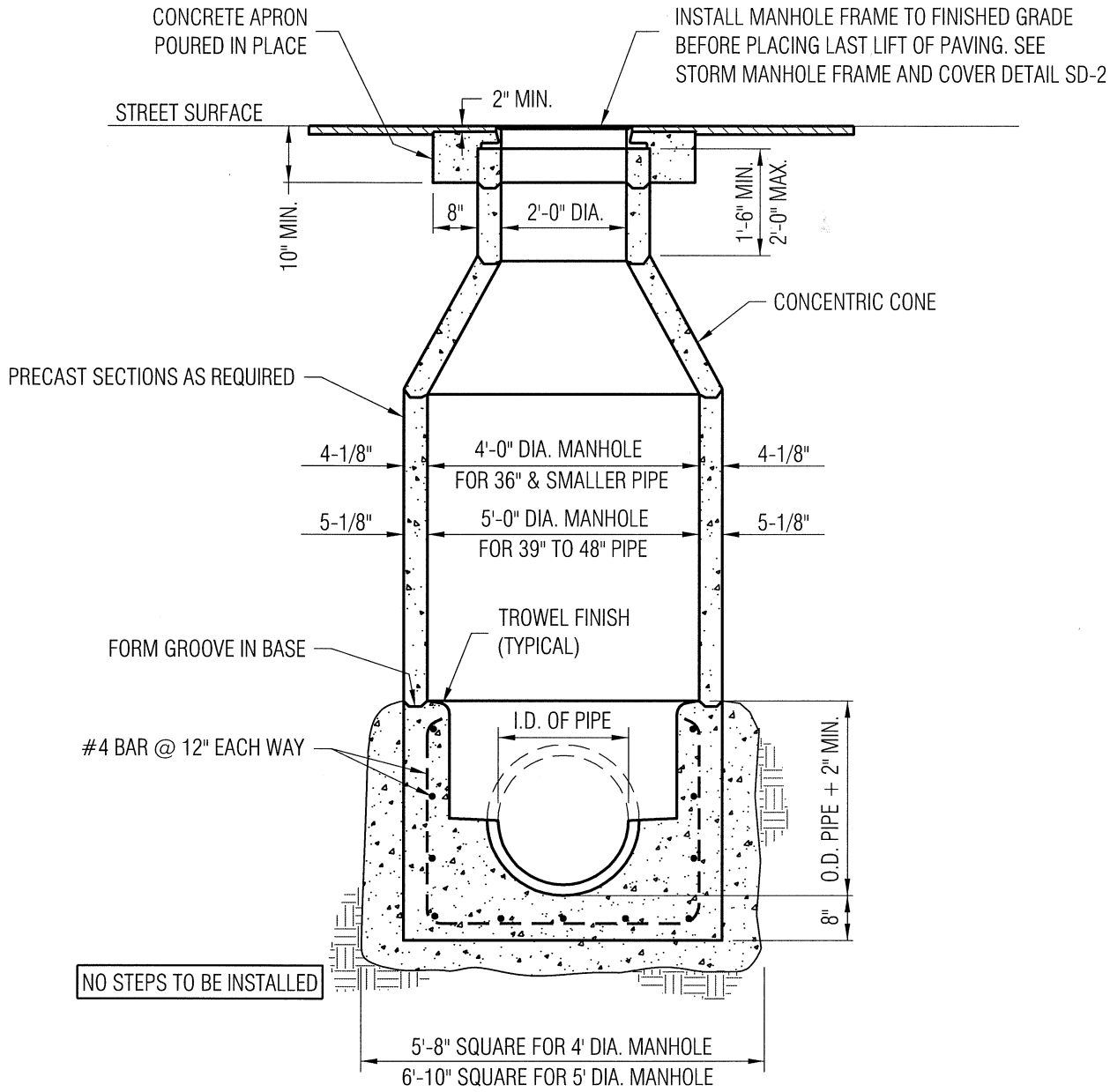

NOTE:

1. LAY PIPE THRU BOTTOM OF MANHOLES. AFTER CONCRETE IN BASE HAS SET, KNOCK OUT PORTION OF PIPE INDICATED WITH DASHED LINES. (FOR BRANCHED BASE SEE SD-3)

Approved: _____ City Engineer 1/4/10 Date

REVISION	
Description	Date

ENGINEERING DIVISION

STORM DRAIN MANHOLE (CONCENTRIC CONE)

SD-1

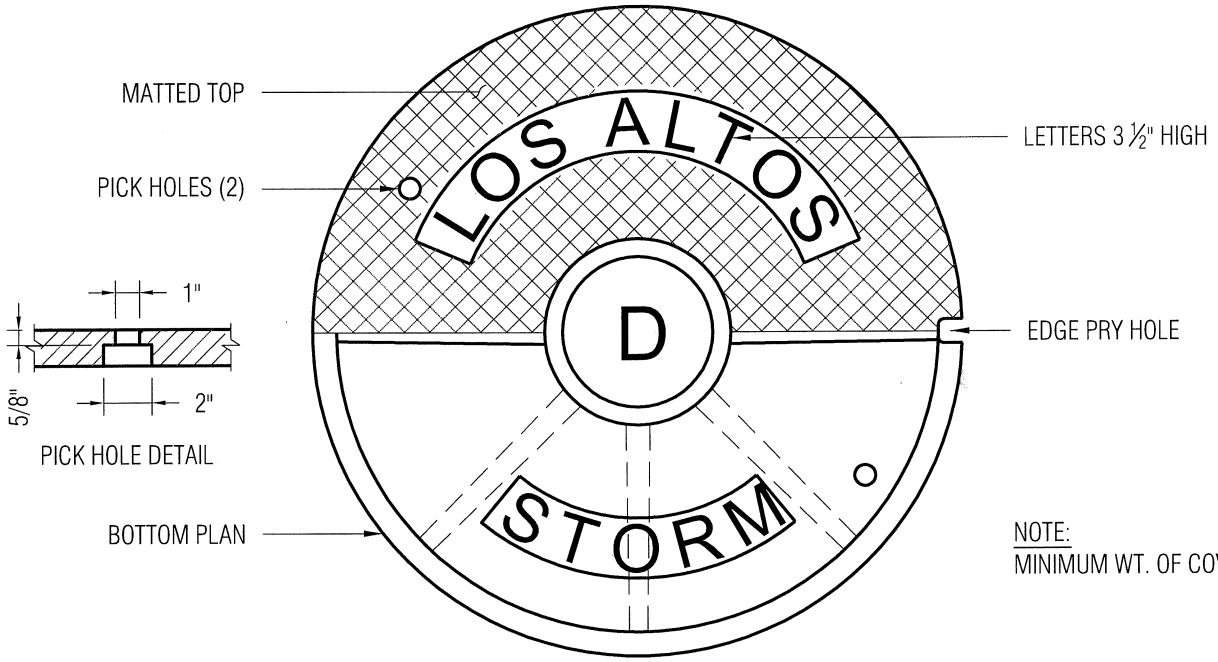

NOTE:
MINIMUM WT. OF COVER 225 LBS.

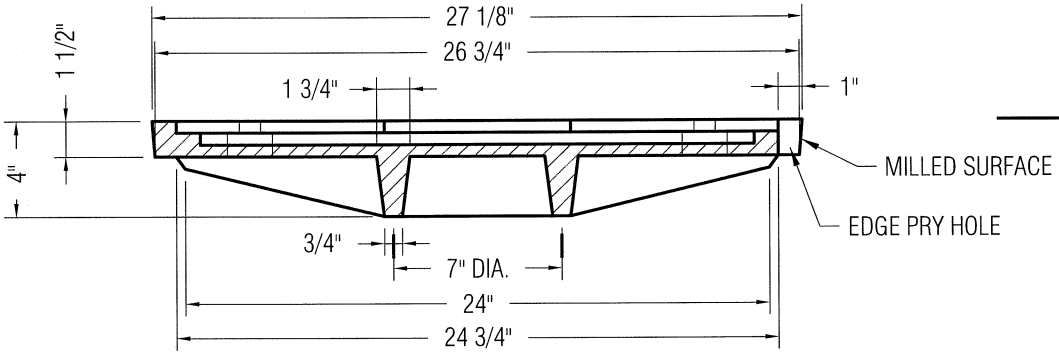

COVER

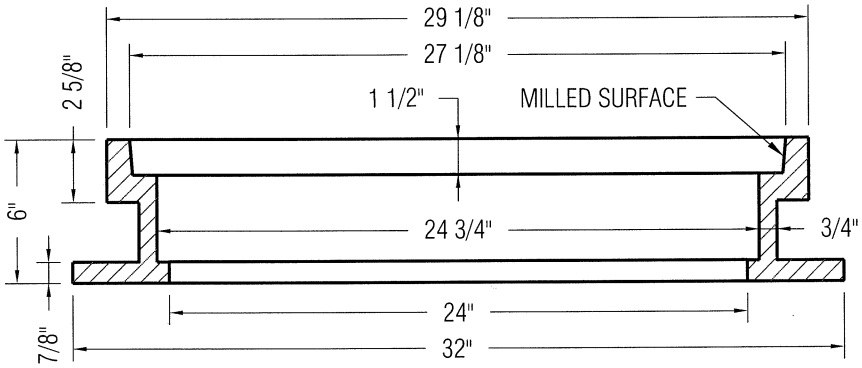

FRAME

SECTION THRU COVER & FRAME

NOTE:
MINIMUM WT. OF FRAME 190 LBS.

Approved: _____ City Engineer 1/4/10 Date

REVISION	
Description	Date

ENGINEERING DIVISION

STORM MANHOLE FRAME AND COVER

SD-2

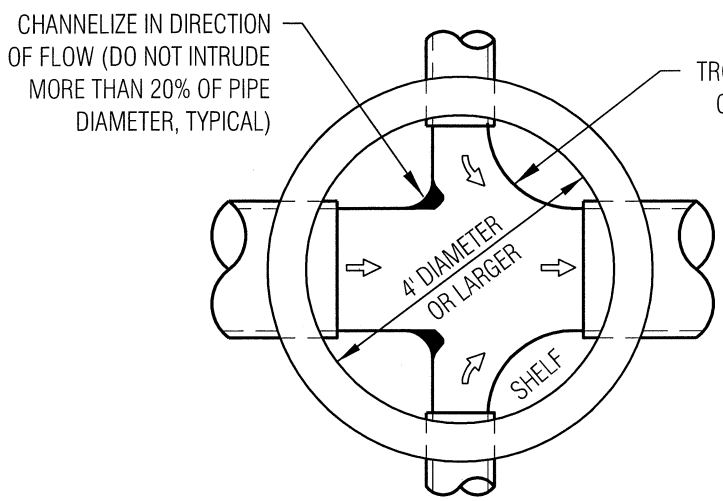

TYPICAL MANHOLE WITH TWO BRANCHES

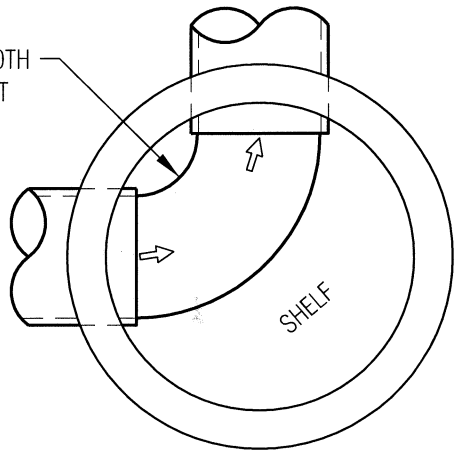

TYPICAL CURVED MANHOLE

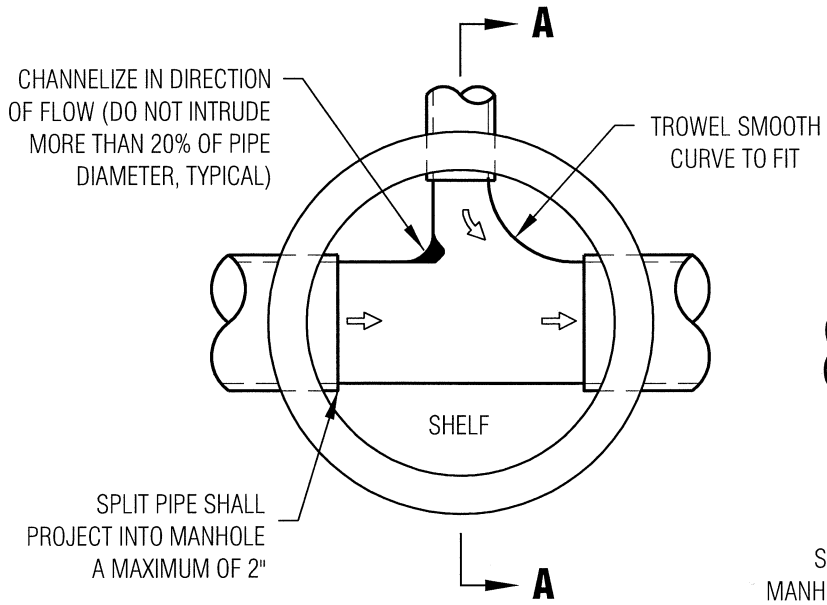

TYPICAL MANHOLE WITH ONE BRANCH

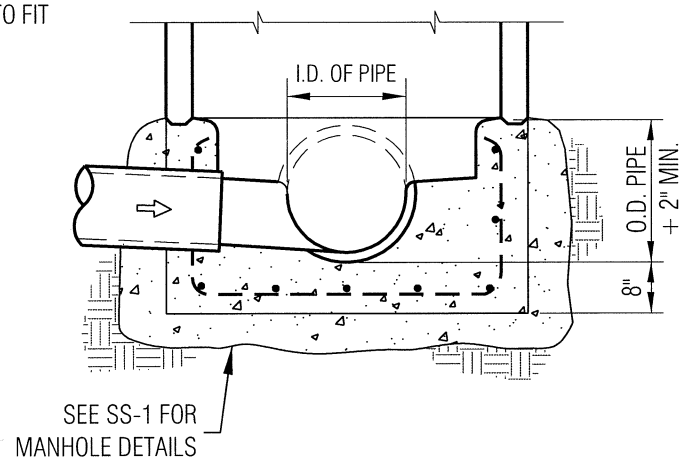

SECTION A-A

Approved: _____ City Engineer 1/4/10 Date

REVISION	
Description	Date

ENGINEERING DIVISION

STORM MANHOLE BASE WITH BRANCHES

SD-3

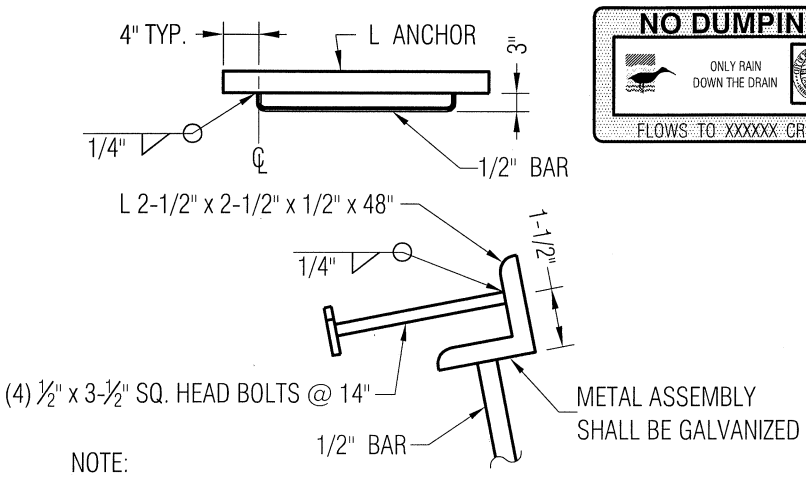

NOTE:
WHERE INLET IS LOCATED WITHIN A RETURN, ANGLE ANCHOR SHALL BE CURVED TO MATCH FACE OF CURB RADIUS.

ANGLE ANCHOR

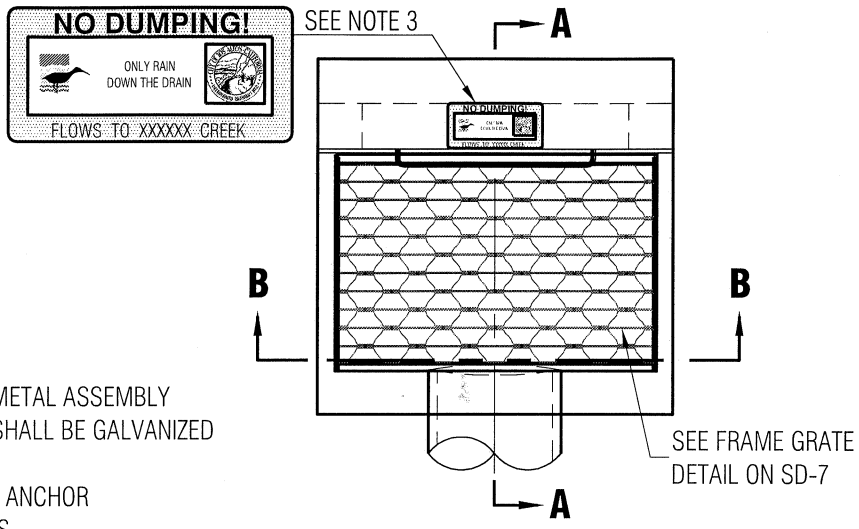

PLAN

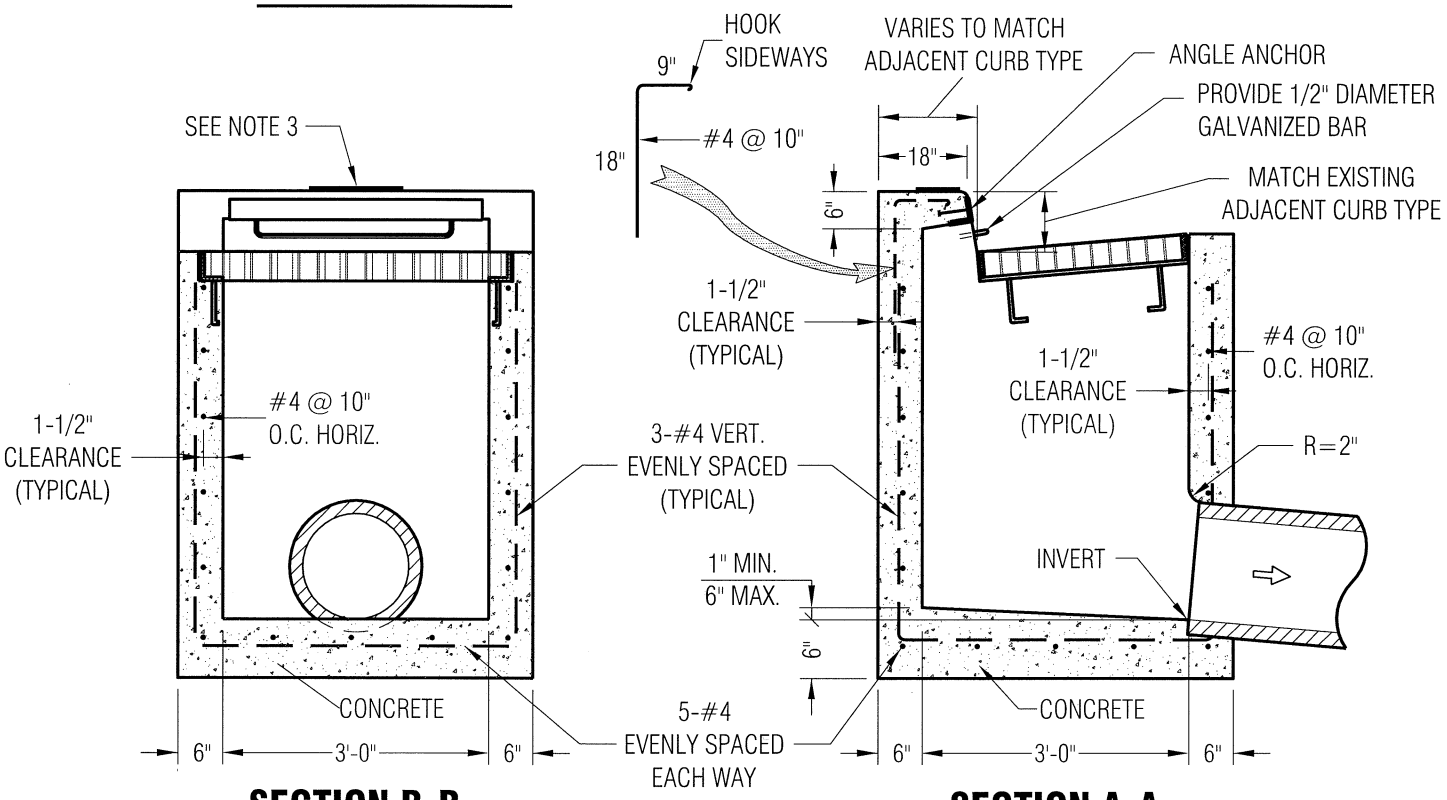

SECTION B-B

SECTION A-A

NOTES:
1. CONFORM TO GUTTER OR ROADWAY SECTION FOR GUTTER DEPRESSION SEE SD-5
2. SEE CONSTRUCTION NOTES ON SD-6
3. INSTALL APPROPRIATE "CREEK" PLACARD

Approved: _____ 1/4/10
City Engineer Date

CITY OF LOS ALTOS · CALIFORNIA · INCORPORATED DECEMBER 1 · 1952

REVISION	
Description	Date

ENGINEERING DIVISION

CURB INLET

SD-4

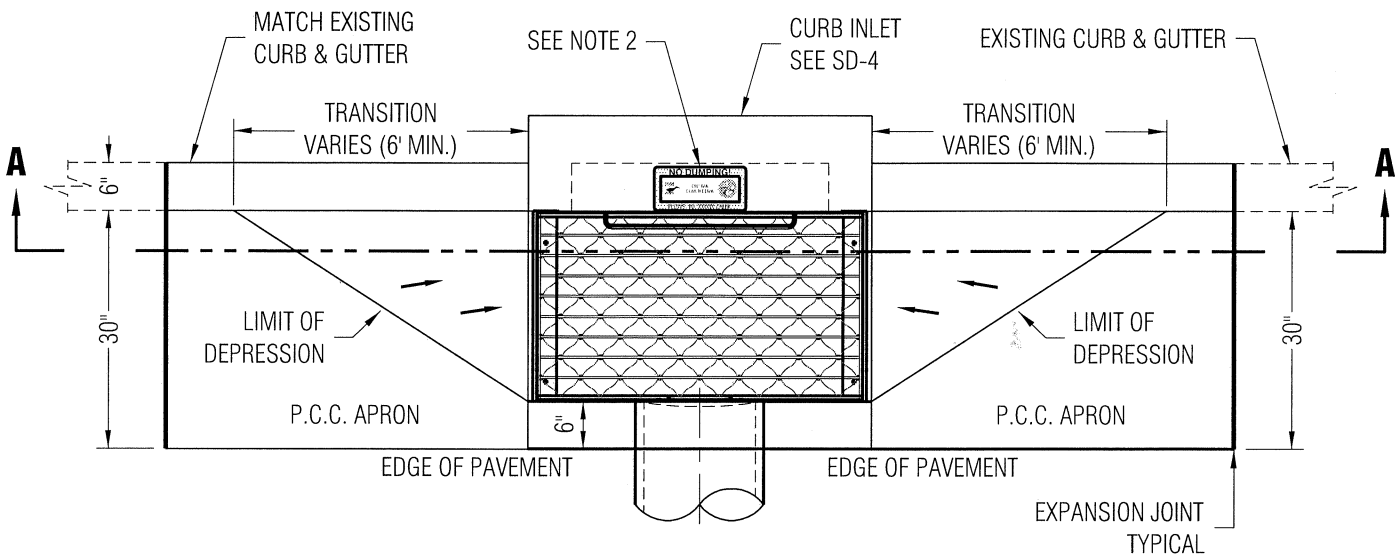

PLAN

NTS

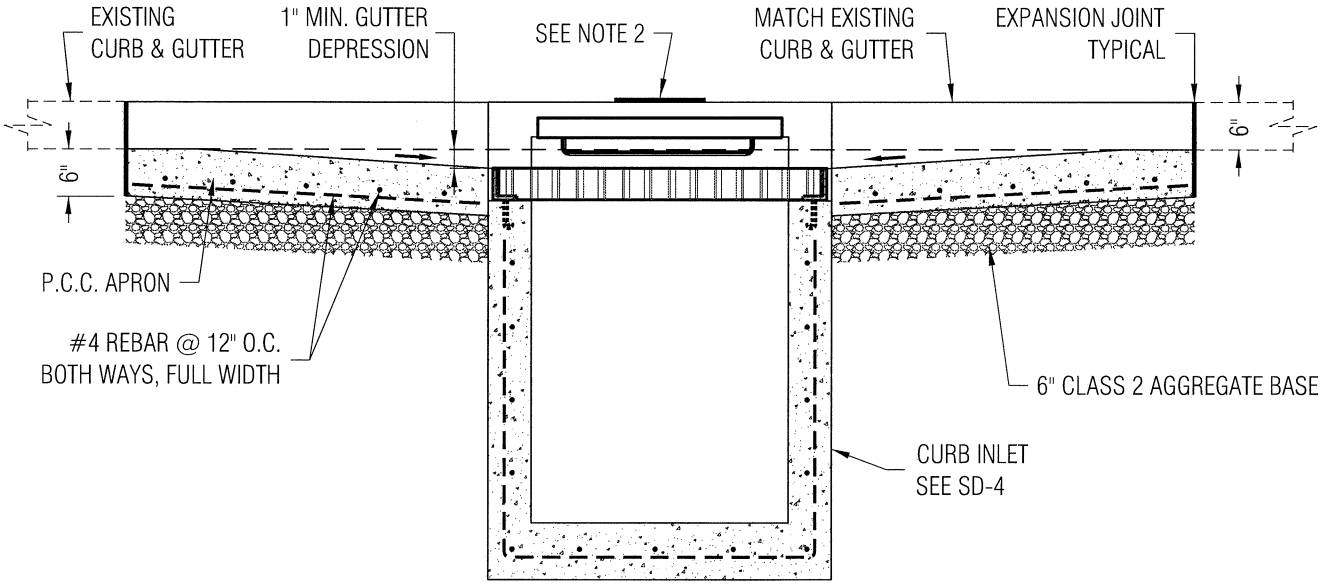

SECTION A-A

NTS

NOTES:
1. SEE CONSTRUCTION NOTES ON SD-6
2. INSTALL APPROPRIATE "CREEK" PLACARD

Approved: _____ 1/4/10
City Engineer Date

CITY OF LOS ALTOS · CALIFORNIA · INCORPORATED DECEMBER 1 · 1952

REVISION		ENGINEERING DIVISION	
Description	Date	CURB INLET GUTTER DEPRESSION	SD-5

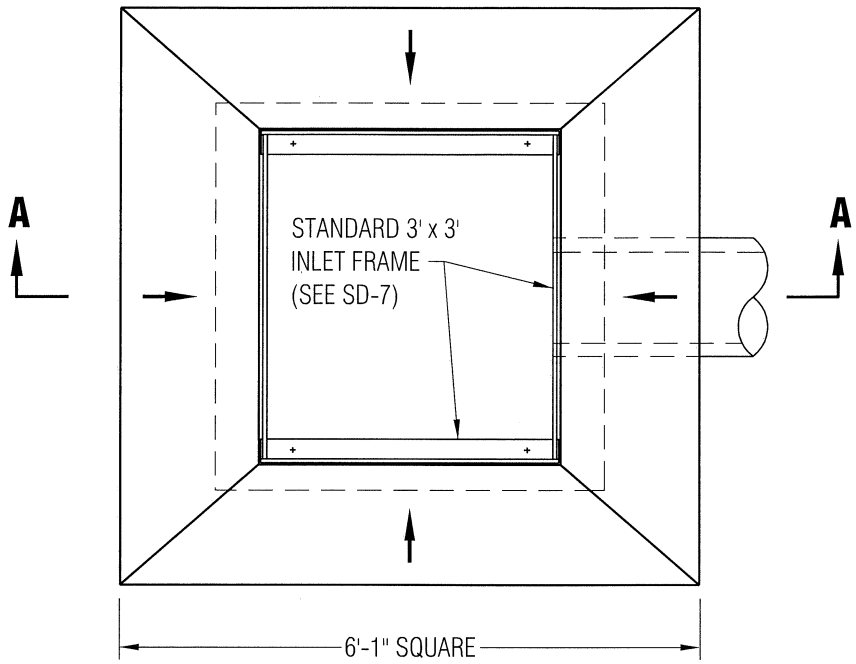

PLAN

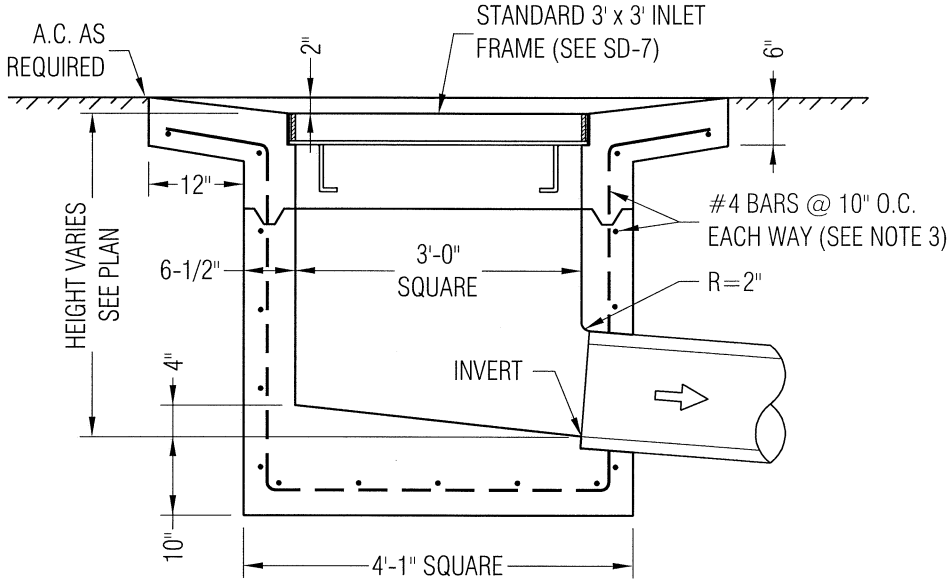

SECTION A-A

NOTES:

1. INLET BASE TO BE POURED AGAINST UNDISTURBED EARTH. SIDES MAY BE FORMED OR MAY BE POURED AGAINST UNDISTURBED EARTH.

2. NO CONCRETE SHALL BE POURED PRIOR TO CHECKING OF FORMS AND STEEL PLACEMENT BY THE ENGINEER.

3. ALL REINFORCING STEEL SHALL HAVE A MINIMUM CLEAR DISTANCE OF 3" AND SHALL BE CONTINUOUS AROUND CORNERS OR SHALL BE LAPPED AT LEAST 15" AFTER THE BEND. THE MINIMUM OVERLAP FOR A LAPPED SPLICE SHALL BE 15".

4. ⌄ INDICATES OPTIONAL CONSTRUCTION JOINT.

Approved: _____ 1/4/10
City Engineer Date

CITY OF LOS ALTOS · CALIFORNIA · INCORPORATED DECEMBER 1 · 1952

REVISION	
Description	Date

ENGINEERING DIVISION

3' x 3' STORM DRAIN INLET

SD-6

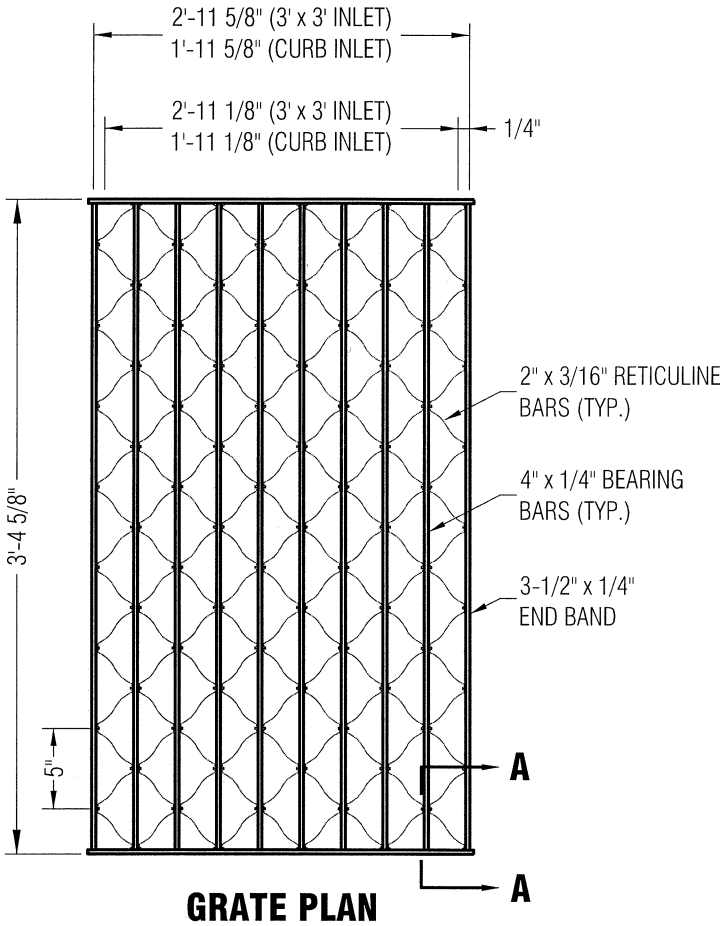

GRATE PLAN

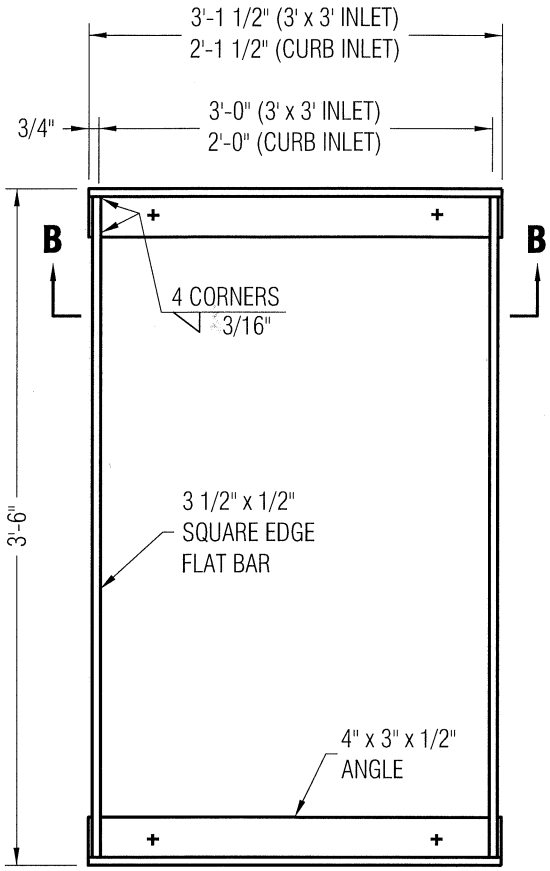

FRAME PLAN

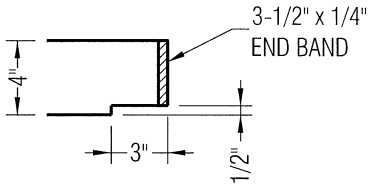

SECTION A-A

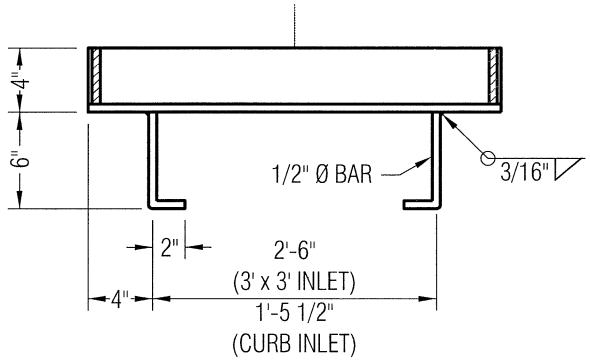

SECTION B-B

NOTES:

1. PLACE GRATE BARS PARALLEL TO FLOW.
2. FRAME , GRATE, ANCHORS AND ALL MISCELLANEOUS HARDWARE SHALL BE GALVANIZED AFTER FABRICATION.
3. CALTRANS TYPE 600-10S RETICULINE GRATE.

Approved: _____ City Engineer 1/4/10 Date

CITY OF LOS ALTOS · CALIFORNIA · INCORPORATED DECEMBER 1 · 1952

REVISION	
Description	Date

ENGINEERING DIVISION

3' x 3' INLET AND STANDARD CURB INLET FRAME AND GRATE

SD-7

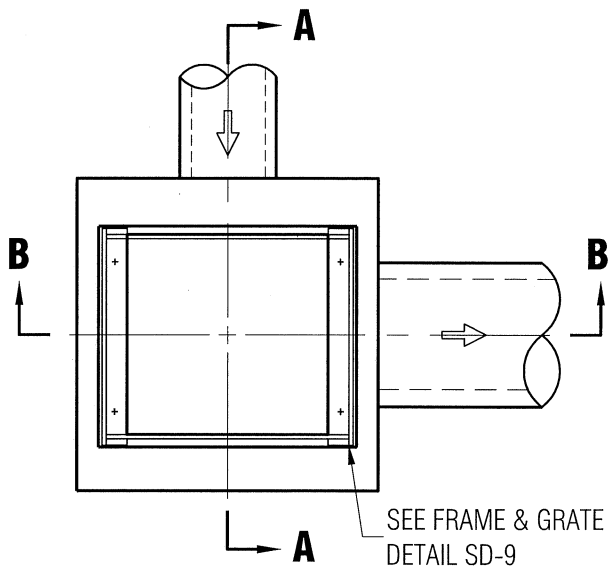

PLAN

NOTE:

1. OUTLET PIPE SHALL BE MIN. 12" - MAX. 18" DIAMETER.
2. ALL CONCRETE SHALL BE CLASS "A", 3/4" MAX. AGGREGATE, 3,300 PSI.
3. THE CROWN OF THE INLET PIPE SHALL BE SET AT THE SAME ELEVATION OF THE CROWN OF THE OUTLET PIPE.
4. REINFORCING STEEL SHALL BE REQUIRED FOR WALLS GREATER THAN 6' IN DEPTH. BOTTOM REBAR MAT IS REQUIRED REGARDLESS OF HEIGHT OF WALLS.
5. CHRISTY U23 CATCH BASIN (2' x 2' WITH 6" WALLS) OR AN APPROVED EQUAL.
6. SEE NOTES ON SD-6.

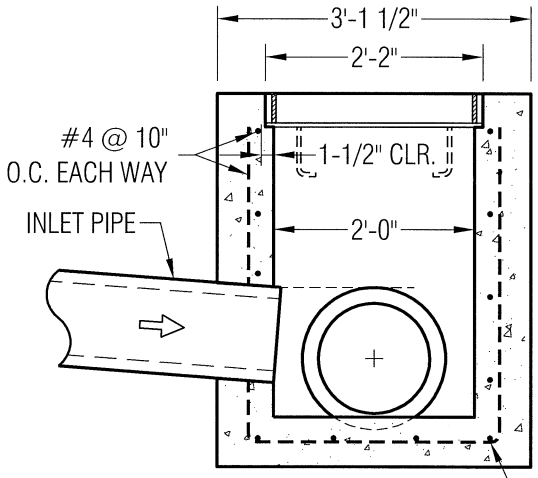

SECTION A-A

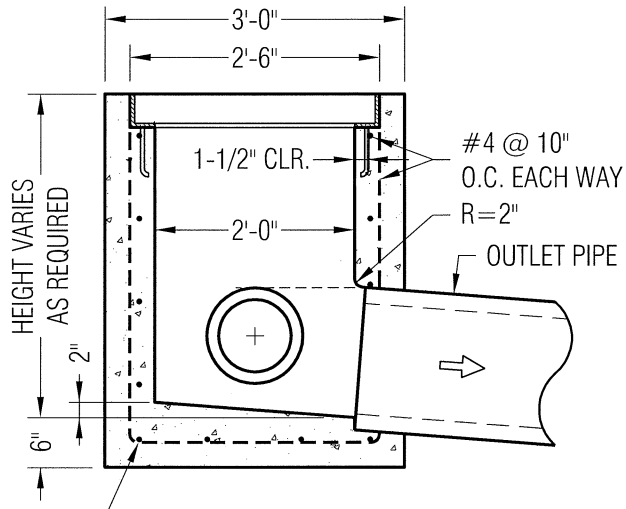

4-#4 EVENLY SPACED
SEE NOTE 4

SECTION B-B

Approved: _____ City Engineer 1/4/10 Date

REVISION		ENGINEERING DIVISION	
Description	Date	2' X 2' STORM DRAIN INLET	SD-8

CITY OF LOS ALTOS · CALIFORNIA · INCORPORATED DECEMBER 1, 1952

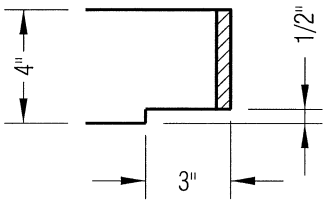

SECTION C-C

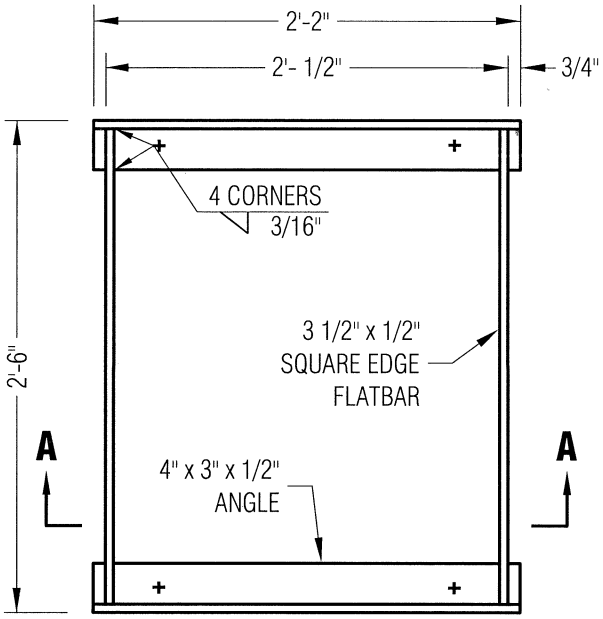

FRAME PLAN

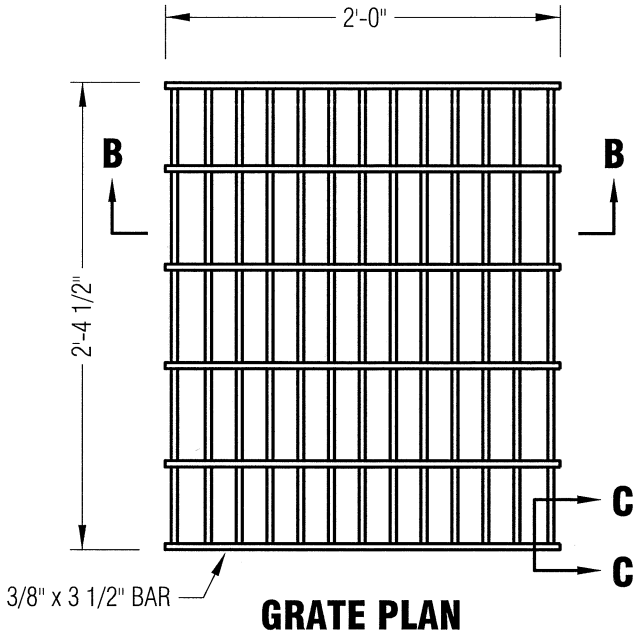

GRATE PLAN

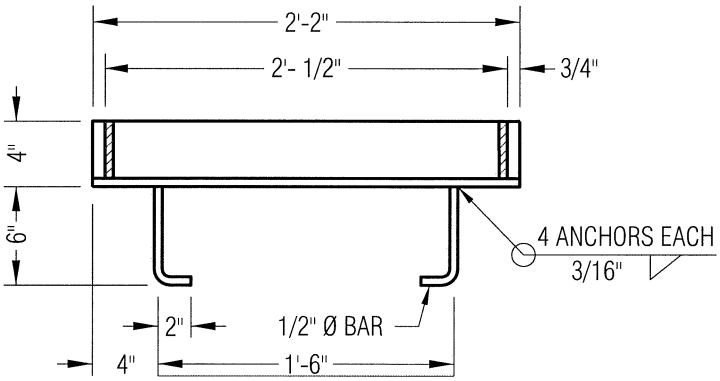

SECTION A-A

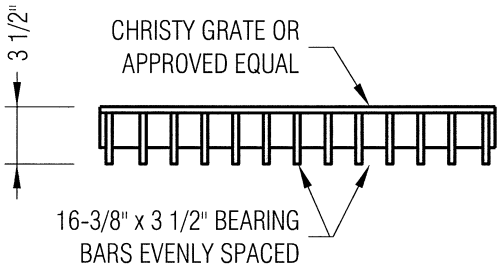

SECTION B-B

NOTES:

1. FRAME AND GRATE TO BE MADE OF CARBON STEEL.
2. ALL SURFACES TO BE GALVANIZED AFTER FABRICATION.
3. PLACE GRATE BEARING BARS PARALLEL TO CL OF OUTLET PIPE.
4. FASTEN GRATE TO FRAME AT CORNERS WITH REMOVABLE CLIPS.

Approved: _____ City Engineer 1/4/10 Date

REVISION	
Description	Date

ENGINEERING DIVISION

2' X 2'
STORM DRAIN INLET
FRAME & GRATE

SD-9

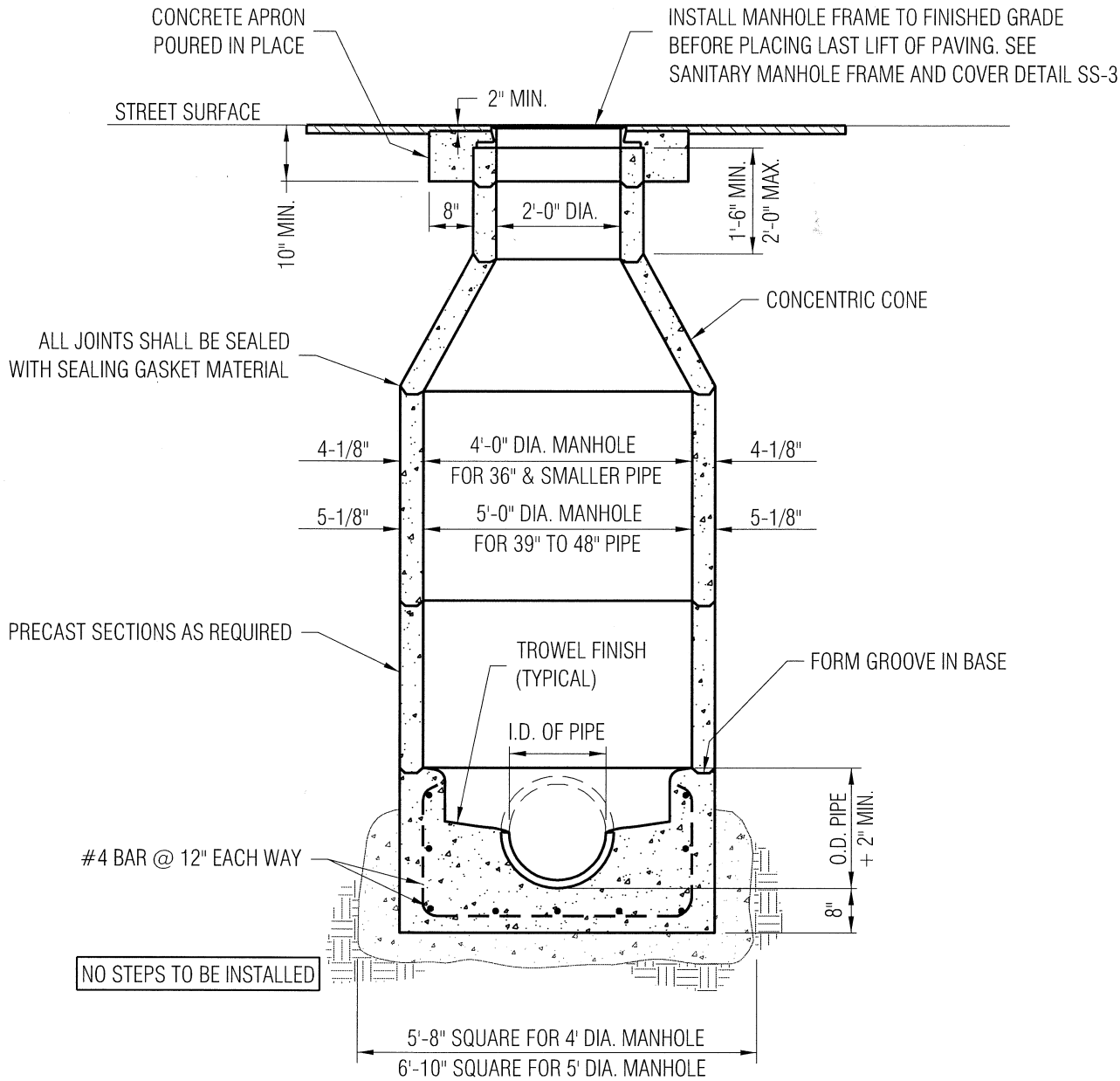

NOTE:

1. FOR INLINE MANHOLES LAY PIPE THRU BOTTOM OF MANHOLES. AFTER CONCRETE IN BASE HAS SET, KNOCK OUT PORTION OF PIPE INDICATED WITH DASHED LINES. (FOR BRANCHED BASE SEE SS-4)

Approved: _____ City Engineer 1/4/10 Date

CITY OF LOS ALTOS · CALIFORNIA · INCORPORATED DECEMBER 1, 1952

REVISION	
Description	Date

ENGINEERING DIVISION

SANITARY SEWER MANHOLE (CONCENTRIC CONE)

SS-1

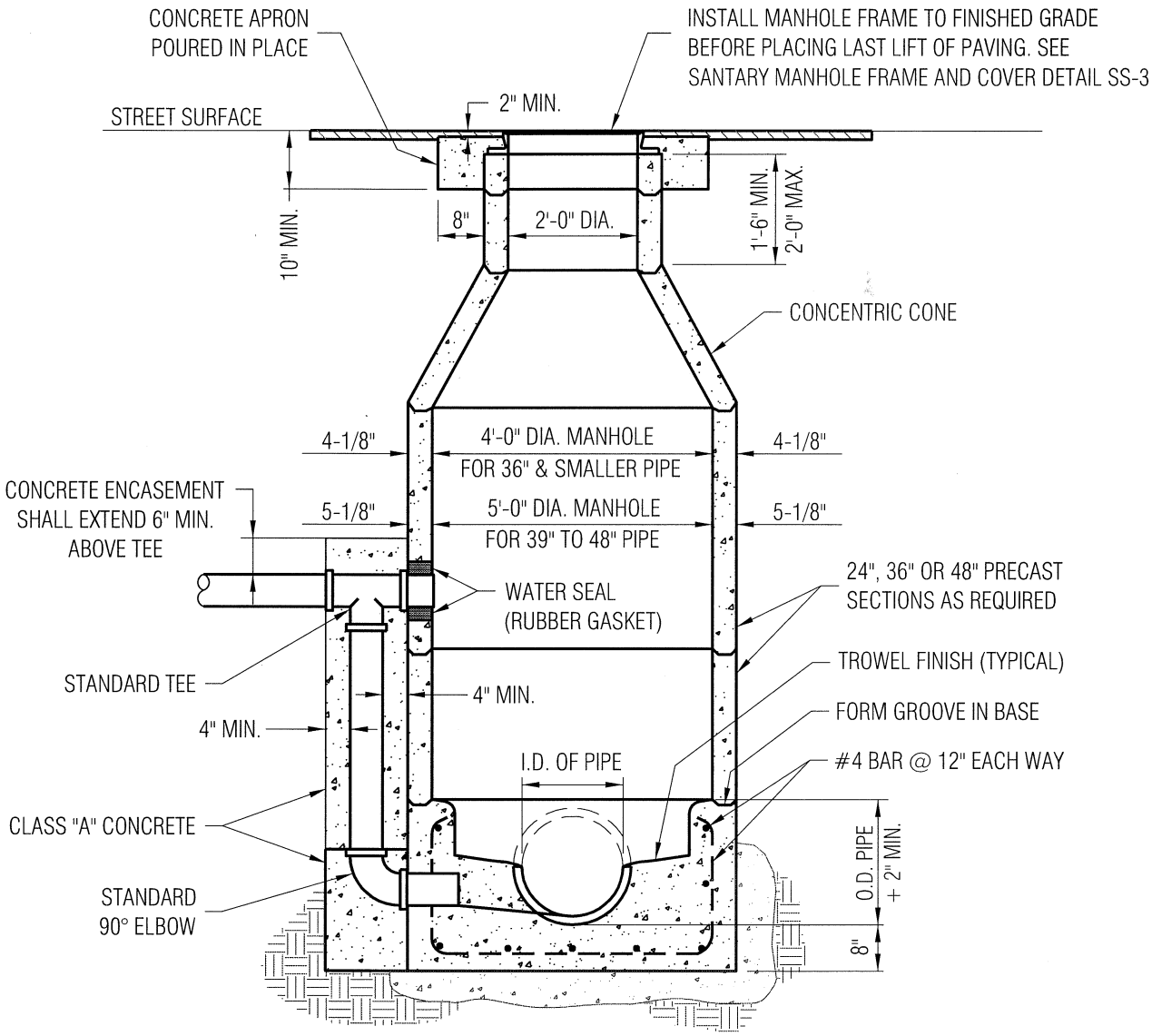

NO STEPS TO BE INSTALLED

NOTES:

1. FOR INLINE MANHOLES LAY PIPE THRU BOTTOM OF MANHOLES. AFTER CONCRETE IN BASE HAS SET, KNOCK OUT PORTION OF PIPE INDICATED WITH DASHED LINES. (FOR BRANCHED BASE SEE SS-4)

2. A DROP CONNECTION SHALL BE INSTALLED WHEN THE PIPE INVERTS INTO THE MANHOLE ARE 2 FEET OR MORE ABOVE THE OUTFLOW INVERT

Approved: _____ City Engineer 1/4/10 Date

CITY OF LOS ALTOS · CALIFORNIA · INCORPORATED DECEMBER 1, 1952

REVISION	
Description	Date

ENGINEERING DIVISION

SANITARY SEWER MANHOLE (OUTSIDE DROP)

SS-2

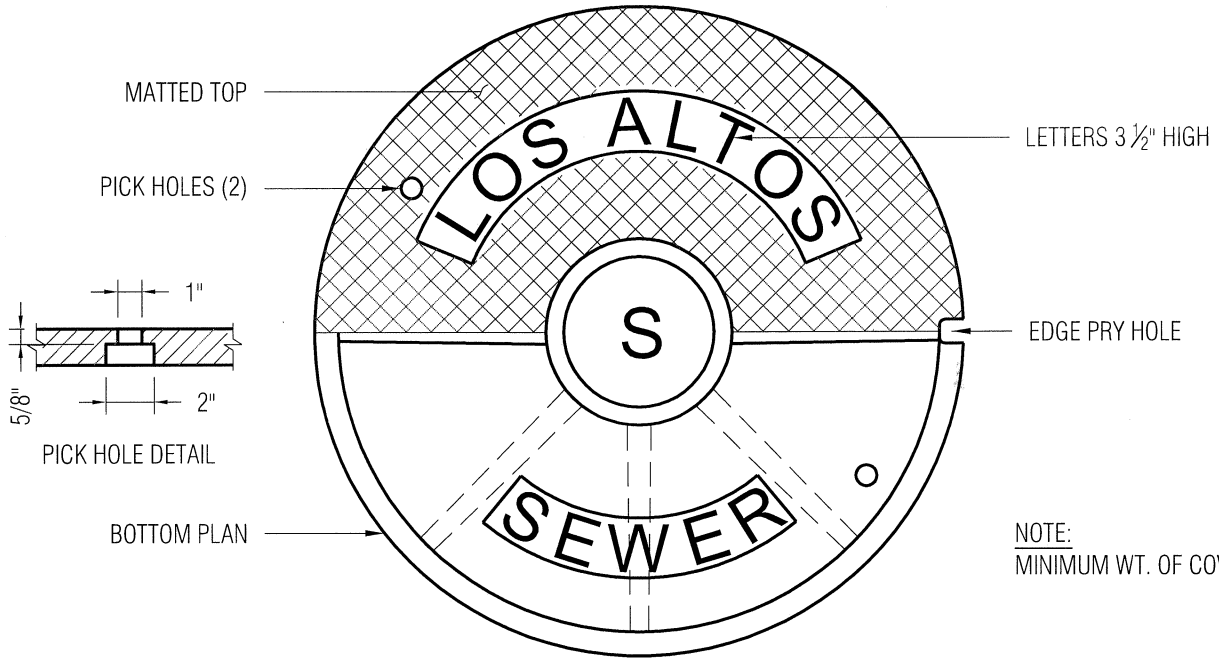

NOTE:
MINIMUM WT. OF COVER 225 LBS.

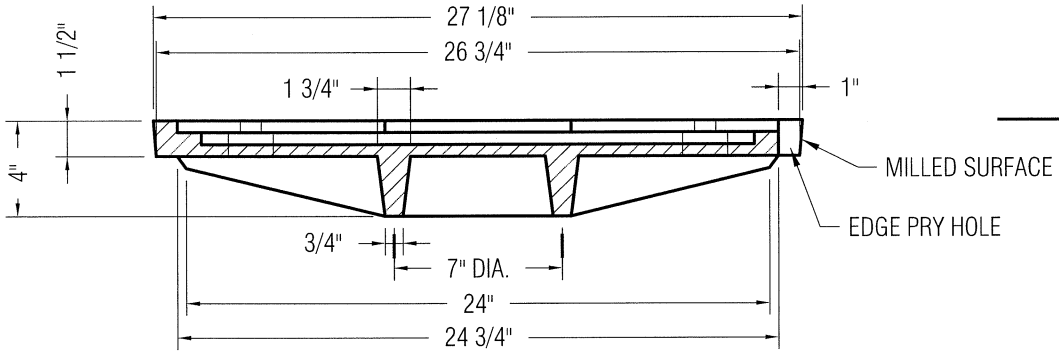

COVER

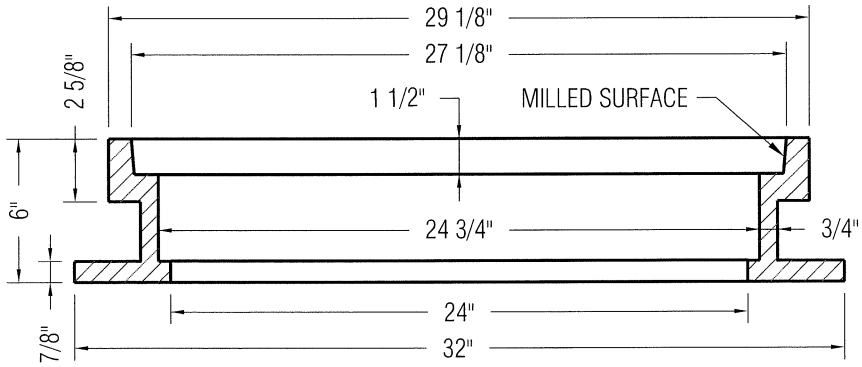

FRAME

SECTION THRU COVER & FRAME

NOTE:
MINIMUM WT. OF FRAME 190 LBS.

Approved: _____ City Engineer 1/4/10 Date

REVISION	
Description	Date

ENGINEERING DIVISION

SANITARY SEWER MANHOLE FRAME AND COVER

SS-3

STANDARD DETAILS MAY 2010

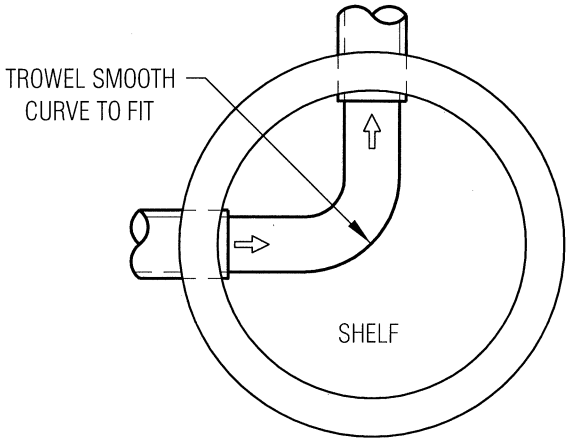

TYPICAL CURVED MANHOLE

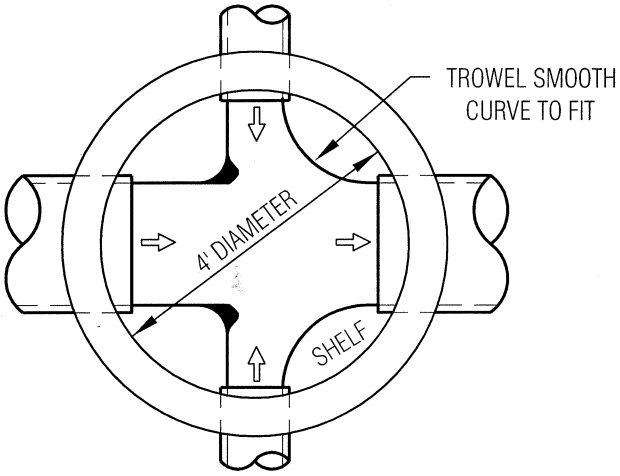

TYPICAL MANHOLE WITH TWO BRANCHES

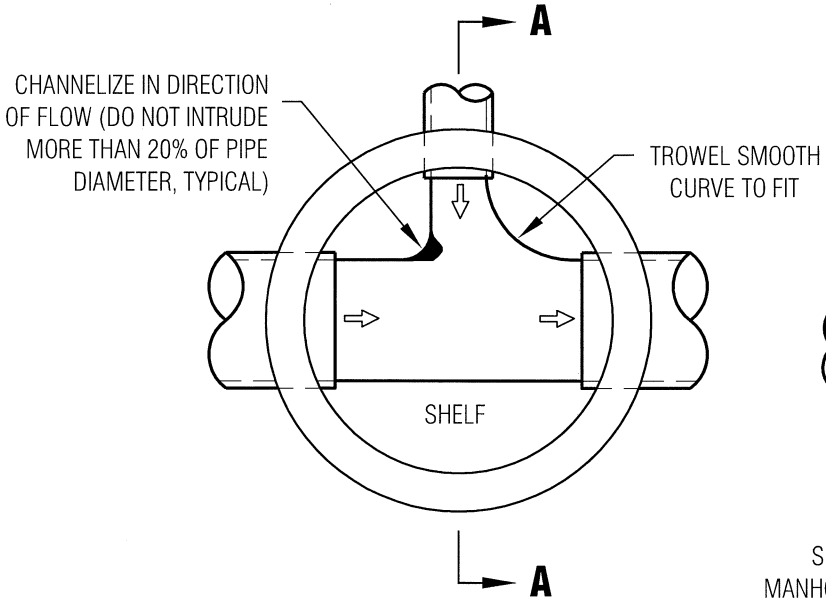

TYPICAL MANHOLE WITH ONE BRANCH

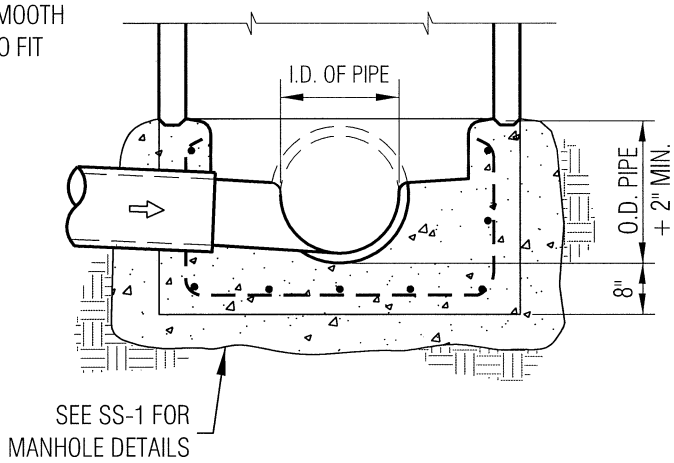

SECTION A-A

NOTE:

1. LAY PIPE THRU BOTTOM OF MANHOLES. AFTER CONCRETE IN BASE HAS SET. KNOCK OUT PORTION OF PIPE INDICATED WITH DASHED LINES.

Approved: _____ City Engineer 1/4/10 Date

REVISION		ENGINEERING DIVISION	
Description	Date	SANITARY SEWER MANHOLE BASE WITH BRANCHES	SS-4

CITY OF LOS ALTOS · CALIFORNIA · INCORPORATED DECEMBER 1, 1952

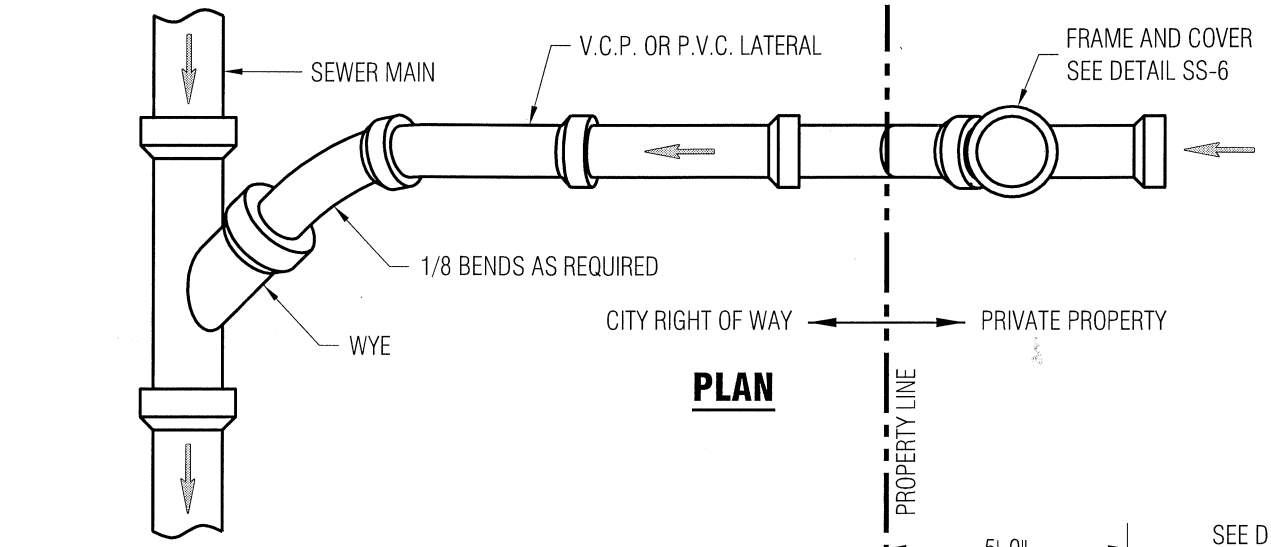

PLAN

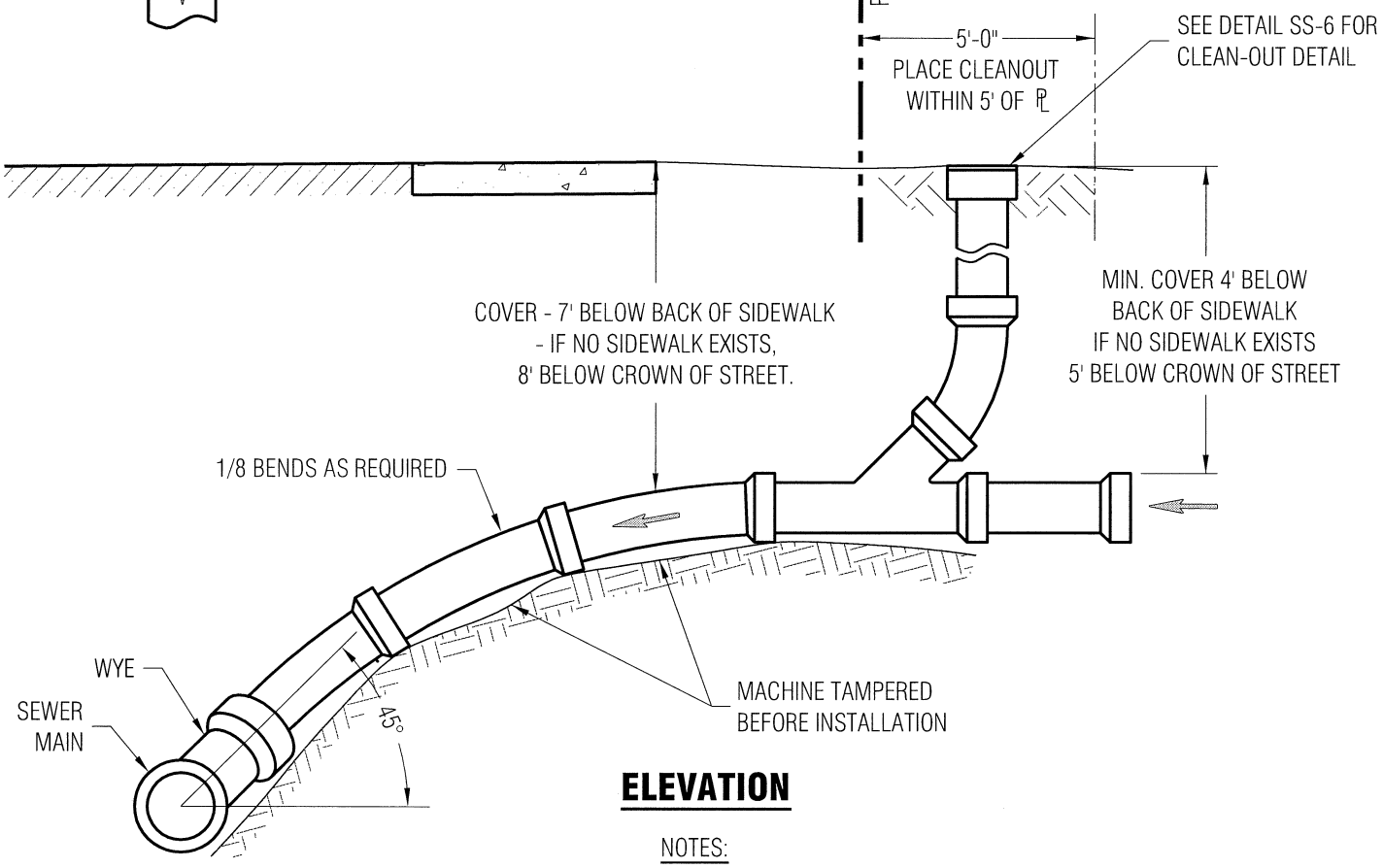

ELEVATION

NOTES:

1. STAMP "S" IN CURB FACE TO SHOW LOCATION OF LATERAL SEE DETAIL SU-7
2. MINIMUM SLOPE OF LATERAL SHALL BE 1/4" PER 12"

Approved: _____ City Engineer 1/4/10 Date

CITY OF LOS ALTOS · CALIFORNIA · INCORPORATED DECEMBER 1, 1952

REVISION	
Description	Date

ENGINEERING DIVISION

SEWER LATERAL AND SEWER RISER

SS-5

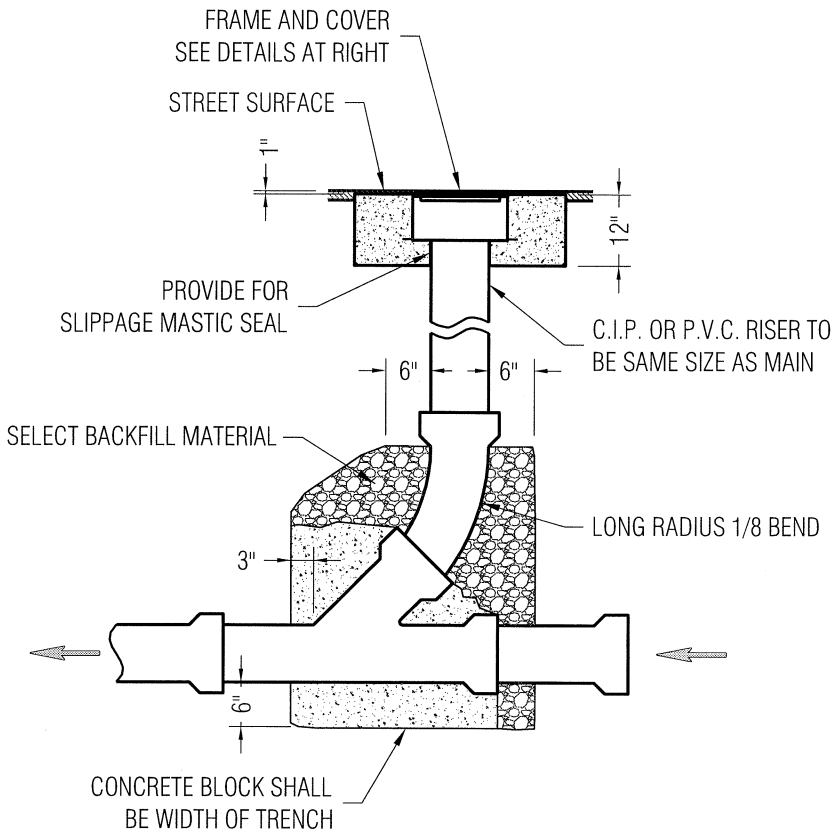

STANDARD SEWER MAIN CLEAN-OUT

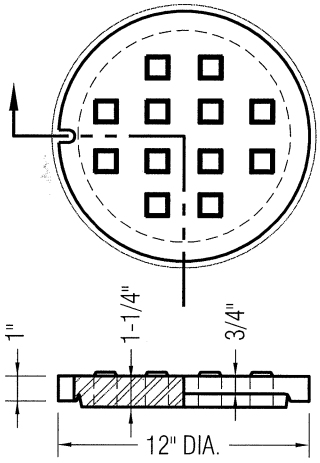

COVER DETAIL

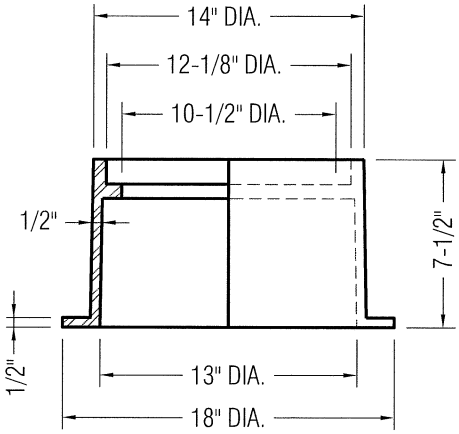

FRAME DETAIL

Approved: _____ City Engineer 1/4/10 Date

REVISION		ENGINEERING DIVISION	
Description	Date	SEWER MAIN CLEAN-OUT	SS-6

CITY OF LOS ALTOS · CALIFORNIA · INCORPORATED DECEMBER 1, 1952

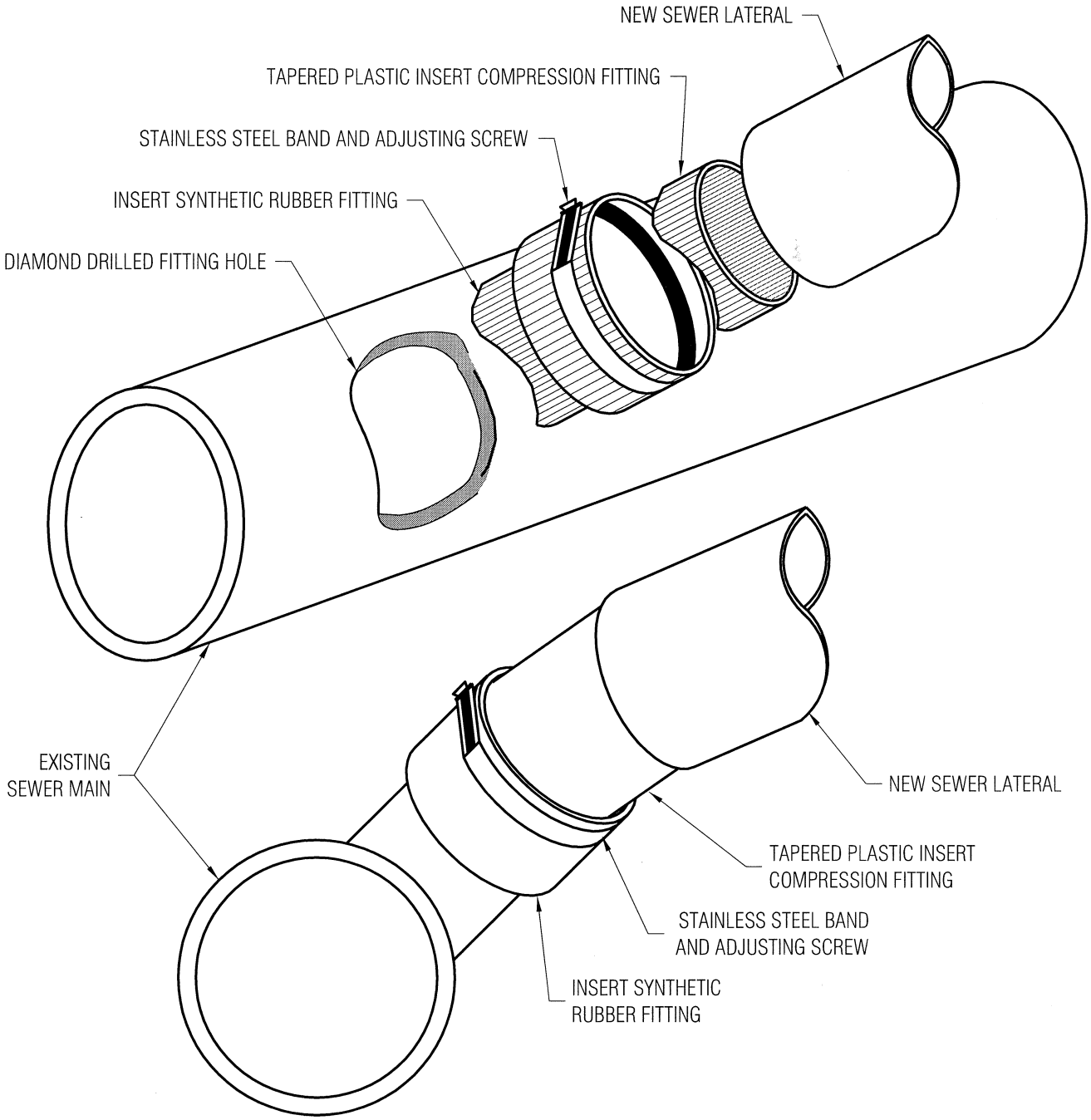

STANDARD SEWER TAP

Approved: _____ City Engineer 1/4/10 Date

REVISION		ENGINEERING DIVISION	
Description	Date	SEWER TAP	SS-7

CITY OF LOS ALTOS · CALIFORNIA · INCORPORATED DECEMBER 1, 1952

STANDARD DETAILS MAY 2010

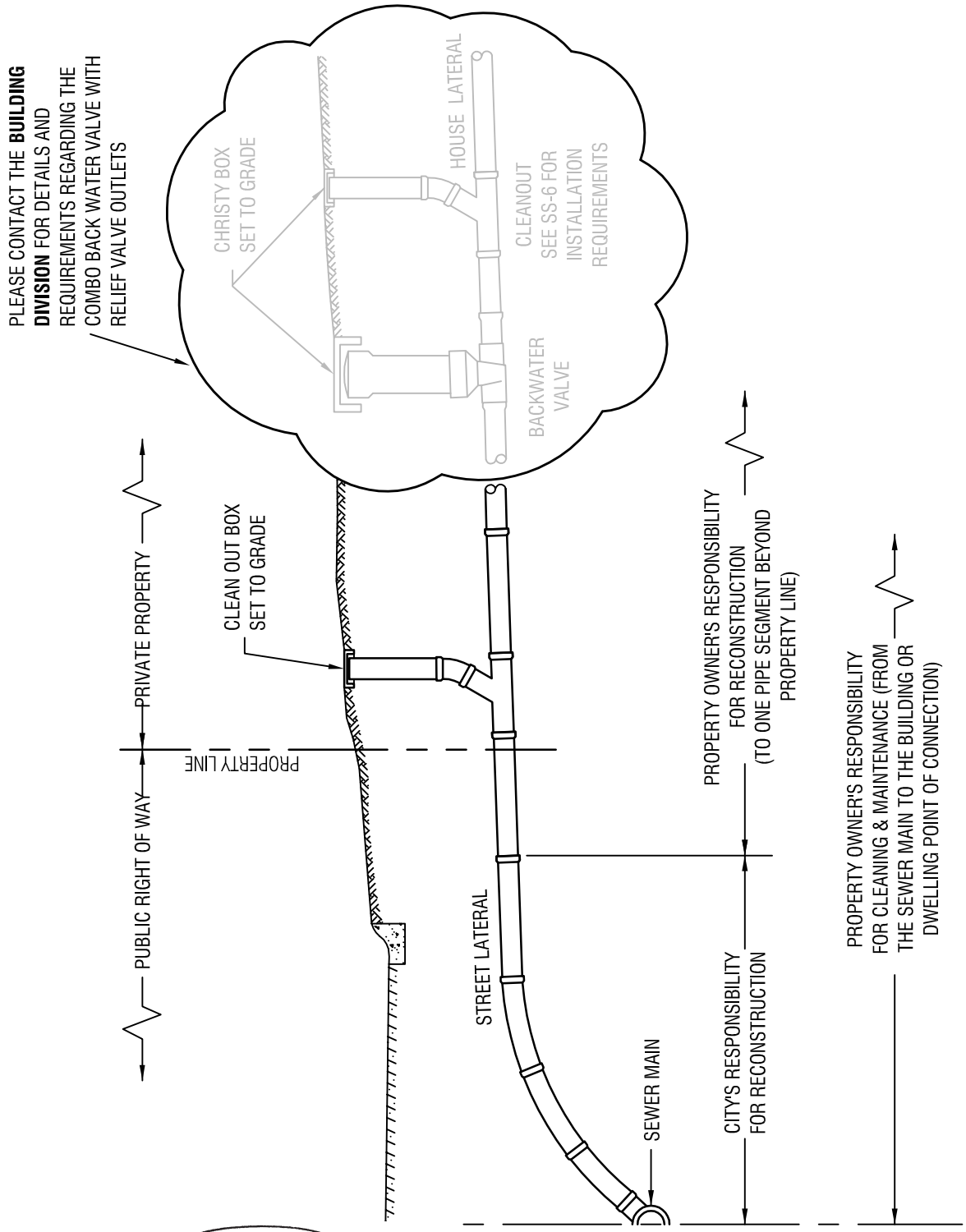

Approved: City Engineer 1/4/10 Date

CITY OF LOS ALTOS · CALIFORNIA · INCORPORATED DECEMBER 1, 1952

REVISION

Description	Date
REVISED	9/18/2012
REVISED	11/6/2013

ENGINEERING DIVISION

SEWER LATERAL DIVISION OF RESPONSIBILITY

SS-8

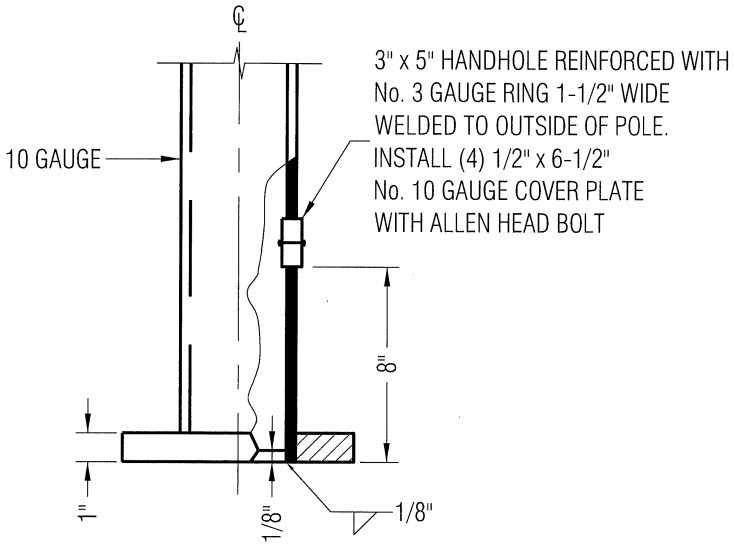

ELEVATION

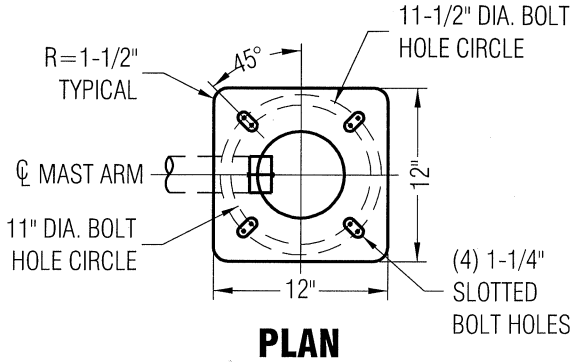

PLAN

BASE PLATE

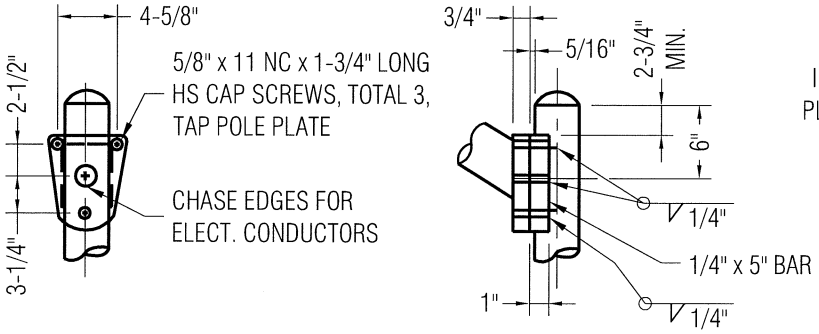

LUMINAIRE ARM CONNECTION

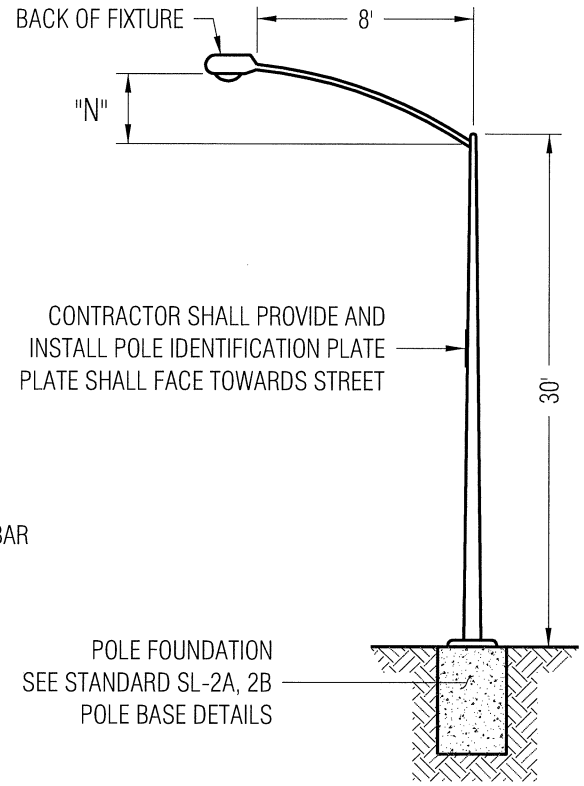

ELEVATION-TYPE 15

POLE DATA					
POLE TYPE	HEIGHT	MIN. O D		THICKNESS	LUMINAIRE ARM LENGHT
		BASE	TOP		
15	30'-0"	8"	3-7/8"	0.1196"	8'-0"

LUMINAIRE ARM DATA				
CLEARANCE HEIGHT	"N" RISE	MIN. O.D. AT POLE	THICKNESS	PROJECTED LENGTH
32'-0"±	2'-6"±	3-1/2"	0.1196"	8'-0"

NOTE:

1. ALL POLES LOCATED ON SAN ANTONIO ROAD OR DOWNTOWN AREA SHALL HAVE A BLACK FINISH
2. ARM LENGTH TO BE 8' UNLESS OTHERWISE NOTED ON PLAN

Approved: _____ City Engineer 1/4/10 Date

CITY OF LOS ALTOS · CALIFORNIA · INCORPORATED DECEMBER 1, 1952

REVISION	
Description	Date

ENGINEERING DIVISION

ELECTROLIER

SL-1

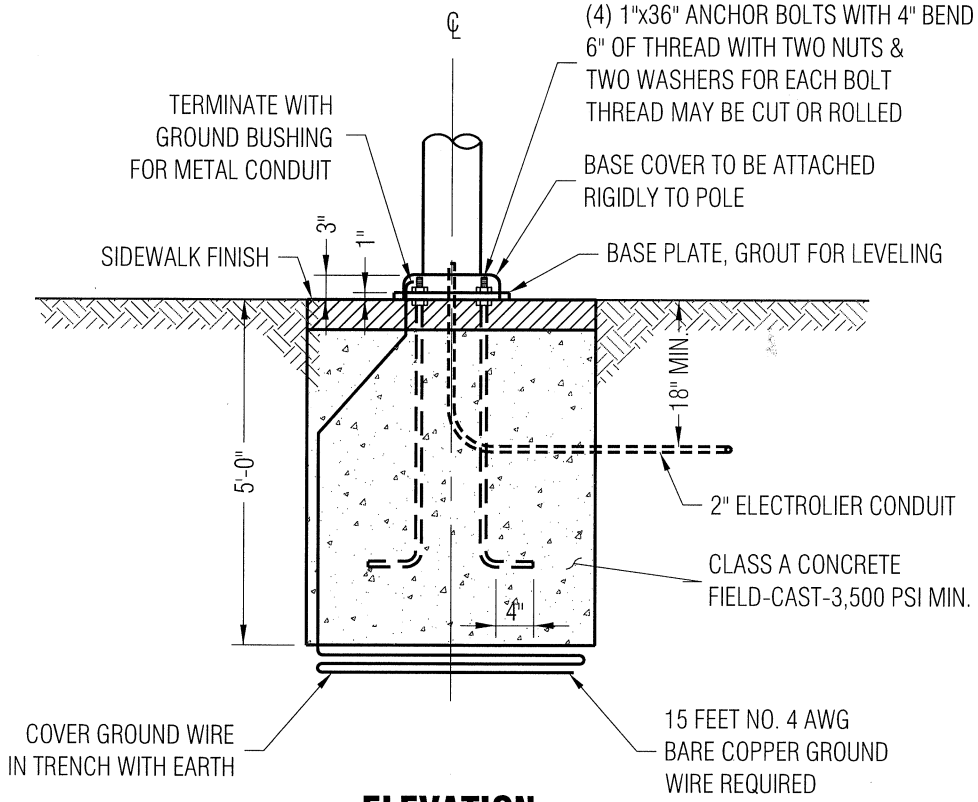

ELEVATION

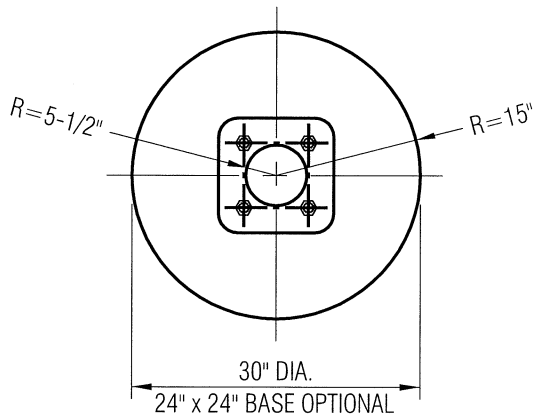

PLAN

FOOTING

Approved: _____ City Engineer 1/4/10 Date

REVISION	
Description	Date

ENGINEERING DIVISION

ELECTROLIER POLE BASE DETAILS (SHEET 1 OF 2)

SL-2A

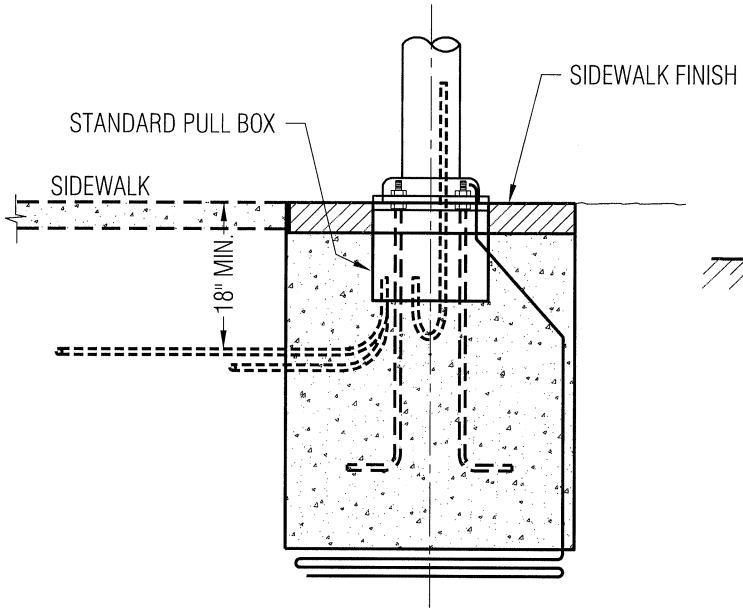

ELEVATION

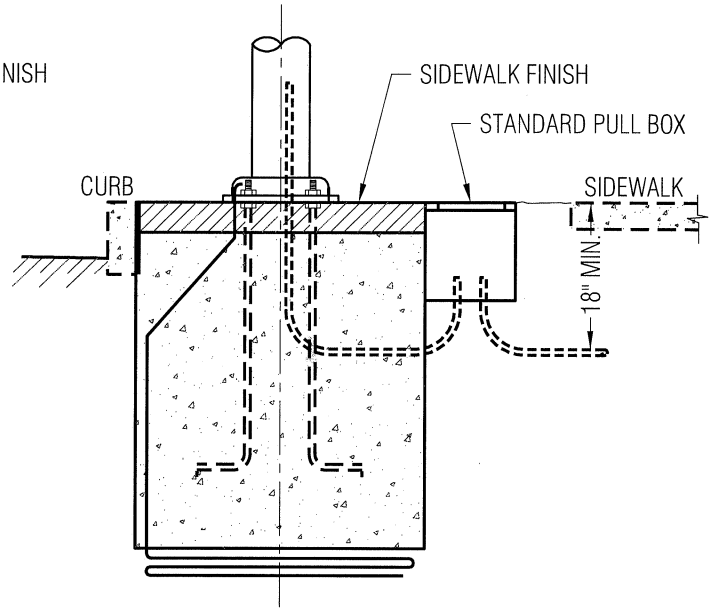

ELEVATION

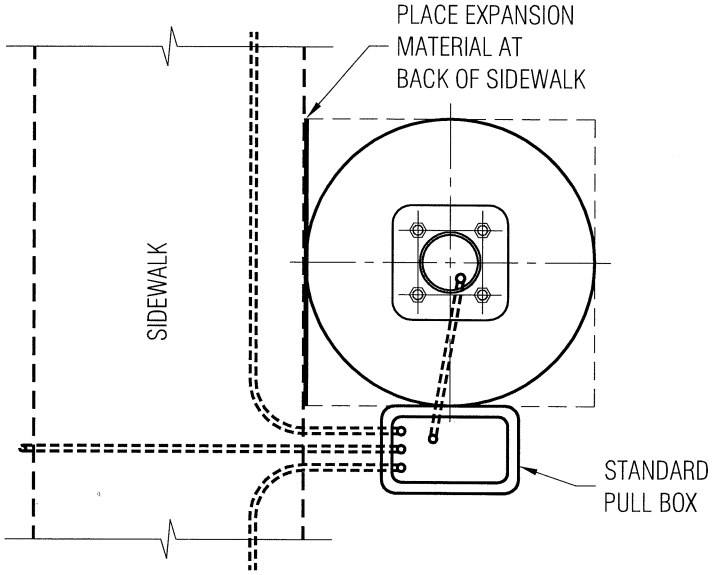

PLAN - 5' SIDEWALK

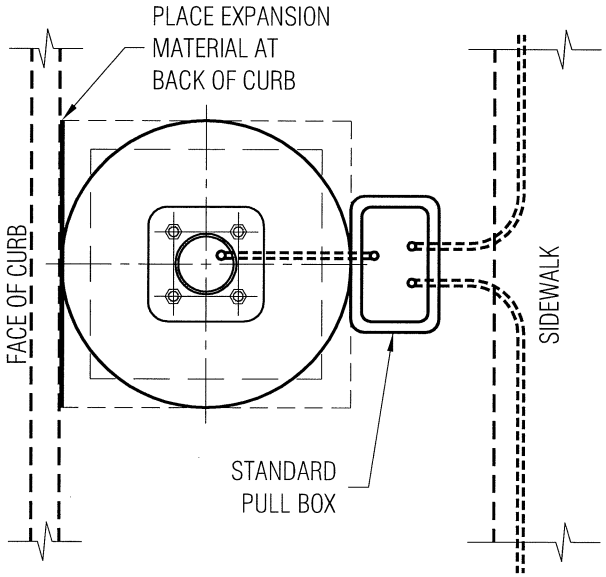

PLAN - NON-MONOLITHIC SIDEWALK

BASE INSTALLATION TO BE USED FOR LOCATIONS WHERE AREA BETWEEN CURB & SIDEWALK IS WIDER THAN 6 FEET

Approved: _____ City Engineer 1/4/10 Date

CITY OF LOS ALTOS · CALIFORNIA · INCORPORATED DECEMBER 1, 1952

REVISION	
Description	Date

ENGINEERING DIVISION

ELECTROLIER POLE BASE DETAILS (SHEET 2 OF 2)

SL-2B

PULL BOX No.	BOX			COVER				
	DEPTH	A	B	C	D	E *	F	G
N9	12"	19-3/4"	14-1/4"	15-1/4"	10"	1-3/4"	N/A	N/A
N16	12"	25-1/4"	15-3/4"	20-5/8"	10-1/2"	2"	2-1/2"	1-3/4"

E * = COVER THICKNESS

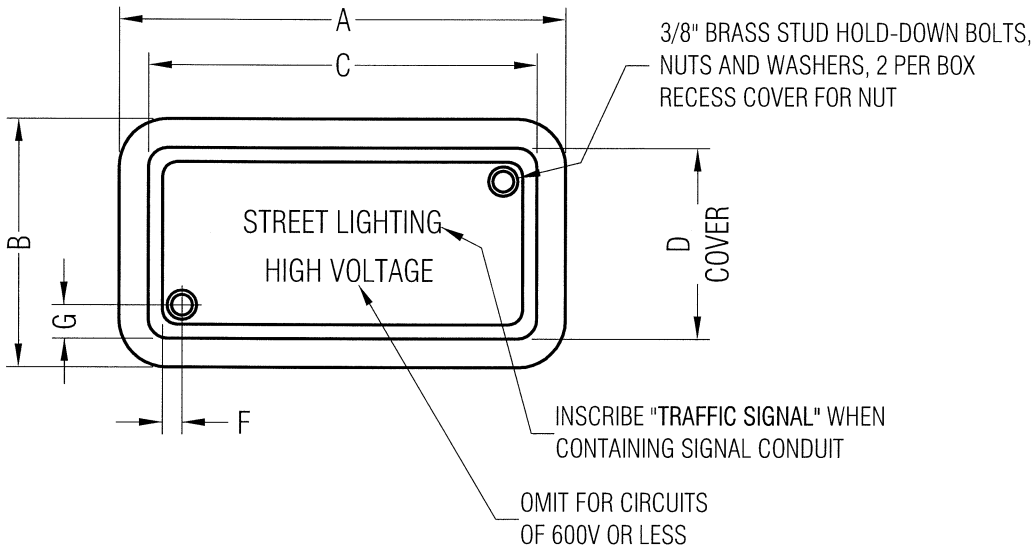

Approved: _____ City Engineer 1/4/10 Date

CITY OF LOS ALTOS · CALIFORNIA · INCORPORATED DECEMBER 1 · 1952

REVISION	
Description	Date

ENGINEERING DIVISION

PULL BOX

SL-3

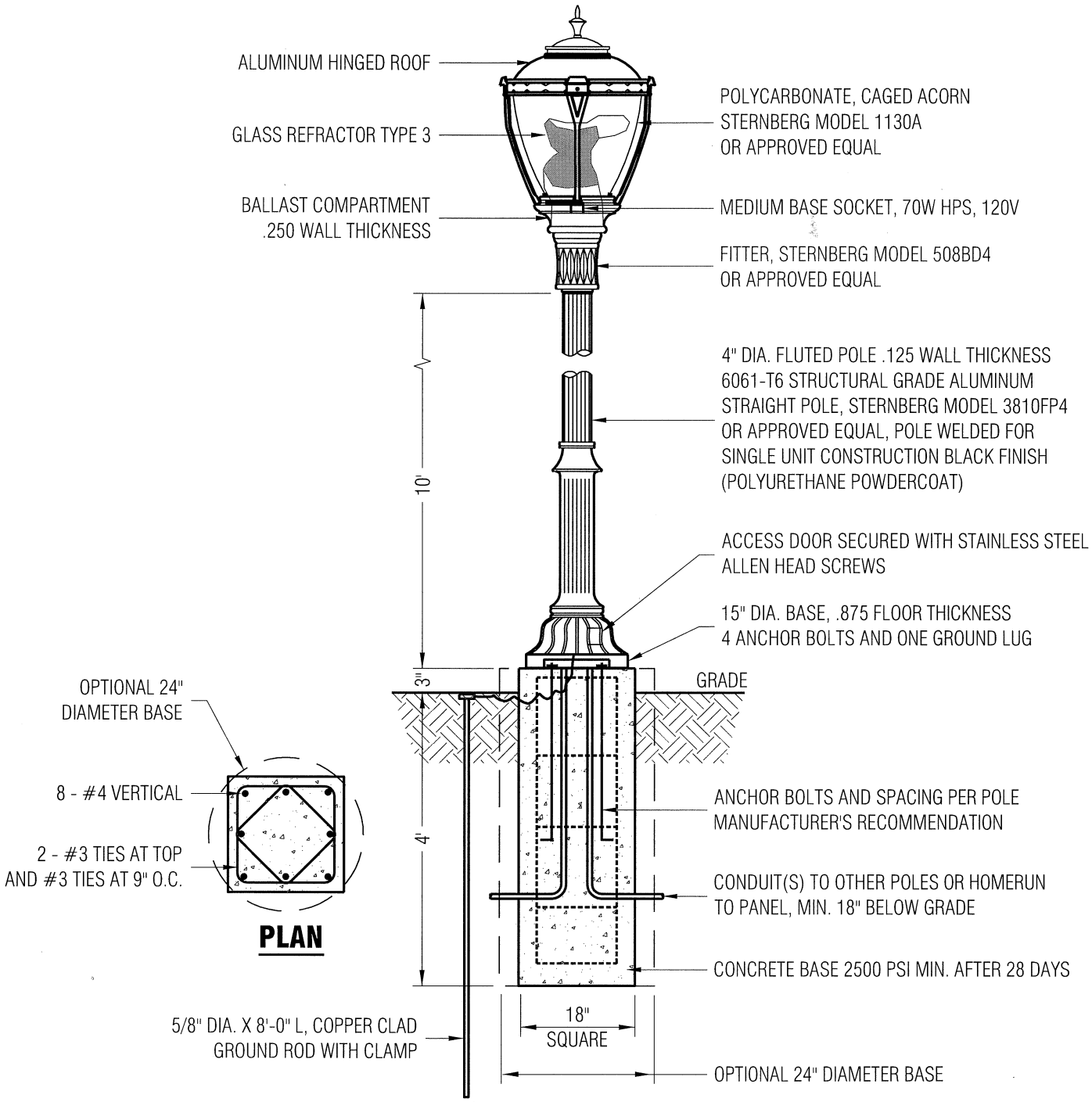

Approved: _____ City Engineer 1/4/10 Date

REVISION	
Description	Date

ENGINEERING DIVISION

DOWNTOWN DECORATIVE ELECTROLIER

SL-4

STANDARD DETAILS MAY 2010

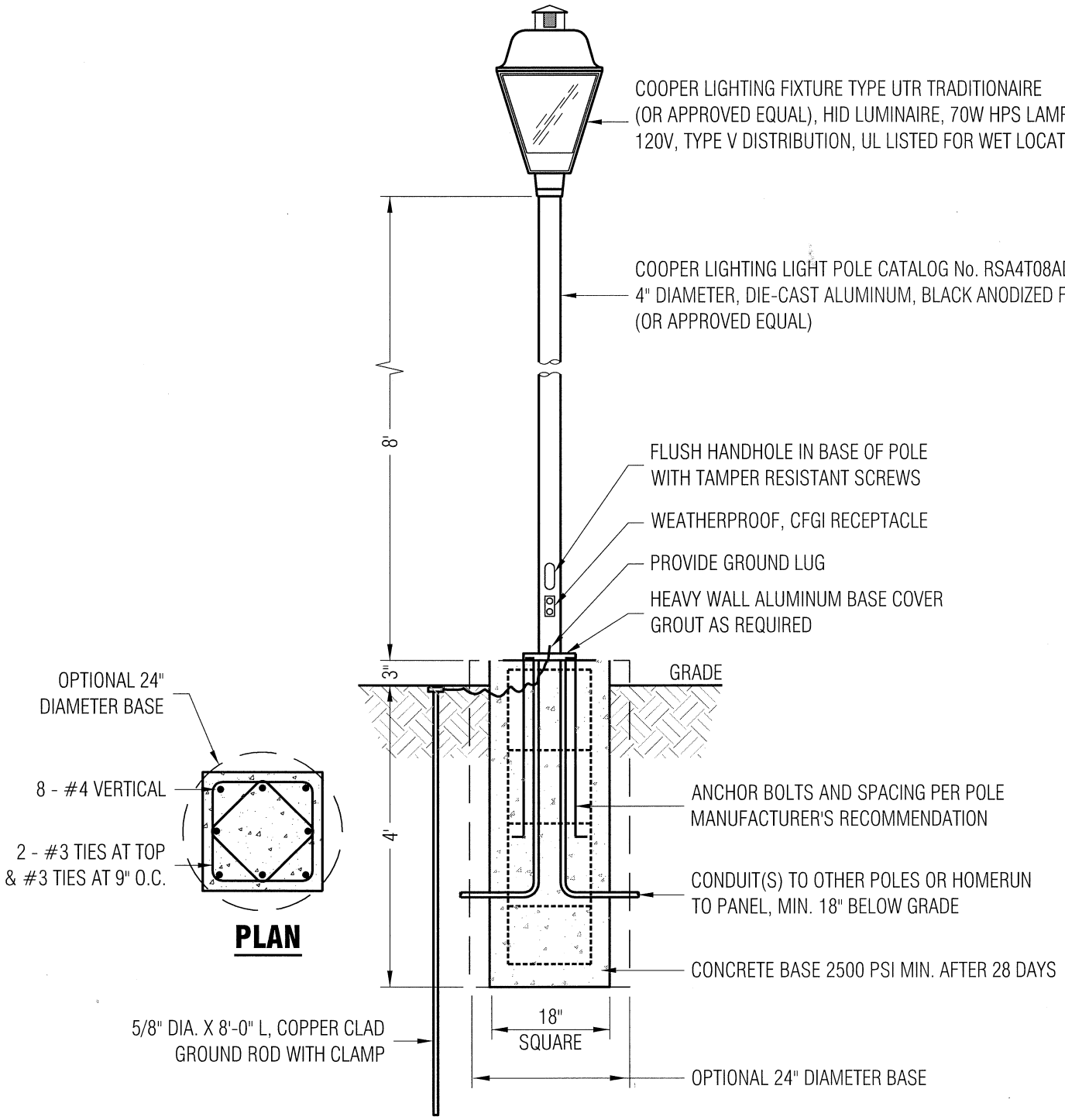

NOTE:
CONTRACTOR SHALL SUBMIT A FOOTCANDLE POINT TO POINT DIAGRAM FOR APPROVAL PRIOR TO ORDERING. SUBMITTAL SHALL USE LIGHT POLE MANUFACTURER'S PHOTOMETRIC DATA

Approved: _____ City Engineer 1/4/10 Date

CITY OF LOS ALTOS · CALIFORNIA · INCORPORATED DECEMBER 1, 1952

REVISION	
Description	Date

ENGINEERING DIVISION

PARK ELECTROLIER

SL-5

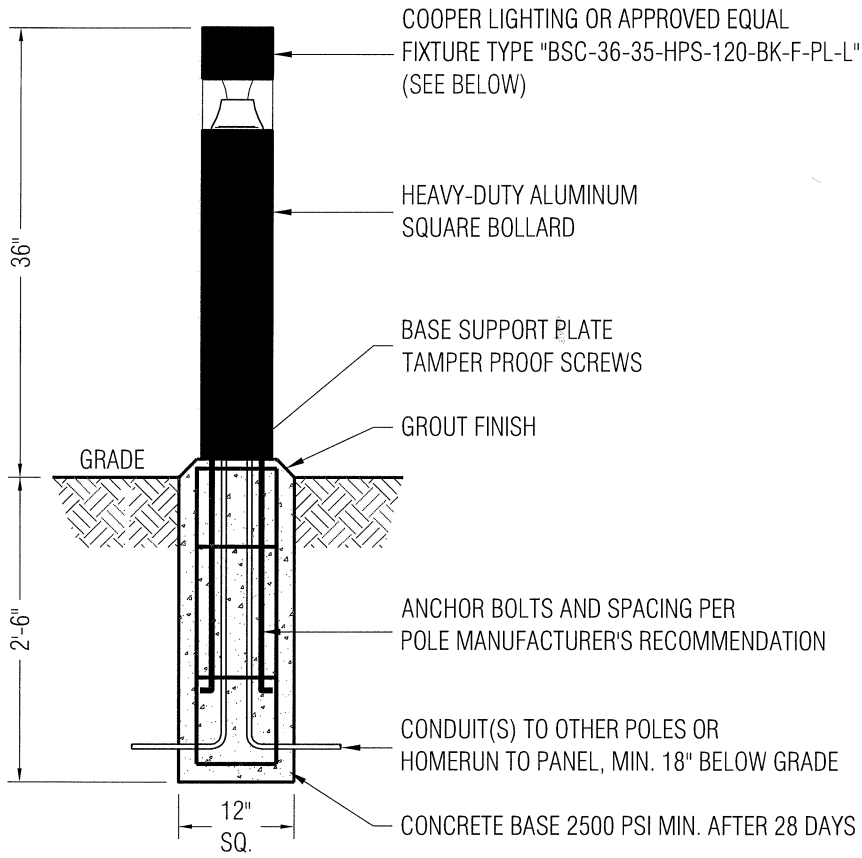

NOTE:
CONTRACTOR SHALL SUBMIT A FOOTCANDLE POINT TO POINT DIAGRAM FOR APPROVAL PRIOR TO ORDERING. SUBMITTAL SHALL USE BOLLARD LIGHT MANUFACTURER'S PHOTOMETRIC DATA

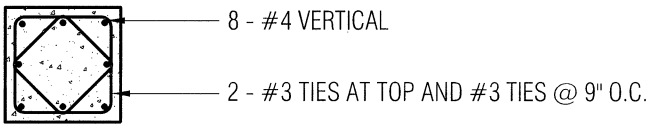

PLAN

LIGHTING FIXTURE SCHEDULE								
TYPE	HEIGHT	LAMP WATTS	LAMP TYPE	VOLTAGE	COLOR FINISH	FUSE	LENS	OTHER OPTIONS
BSC	36"	35W	HIGH PRESSURE SODIUM	120V	BLACK POLYESTER POWDER COAT	SINGLE	POLYCARBONATE	LAMP INCLUDED

Approved: _____ City Engineer 1/4/10 Date

CITY OF LOS ALTOS · CALIFORNIA · INCORPORATED DECEMBER 1 · 1952

REVISION	
Description	Date

ENGINEERING DIVISION

BOLLARD LIGHT DETAIL

SL-6

NOTES:

1. FOR TREES PLANTED WITHIN 6' OF A PERMANENT STRUCTURE (DRIVEWAY, SIDEWALK, CURB, ETC.) INSTALL A "DEEP ROOT BARRIER PLANTER NO. RB12-2 MANUFACTURED BY DEEP ROOT CORP." OR APPROVED EQUAL

2. FOR TREE PLANTED IN A NON-IRRIGATED AREA OR WHERE HAND WATERING IS NECESSARY, INSTALL AT THE PERIMETER A 4"x30" P.V.C. DRAIN PIPE WITH A 4" SLOAN GRATE OR APPROVED EQUAL 1" ABOVE FINISH GRADE

3. TREES SHALL BE PLANTED A MINIMUM OF 10' FROM SANITARY SEWER LATERALS AND 5' FROM WATER SERVICES AND DRIVEWAYS

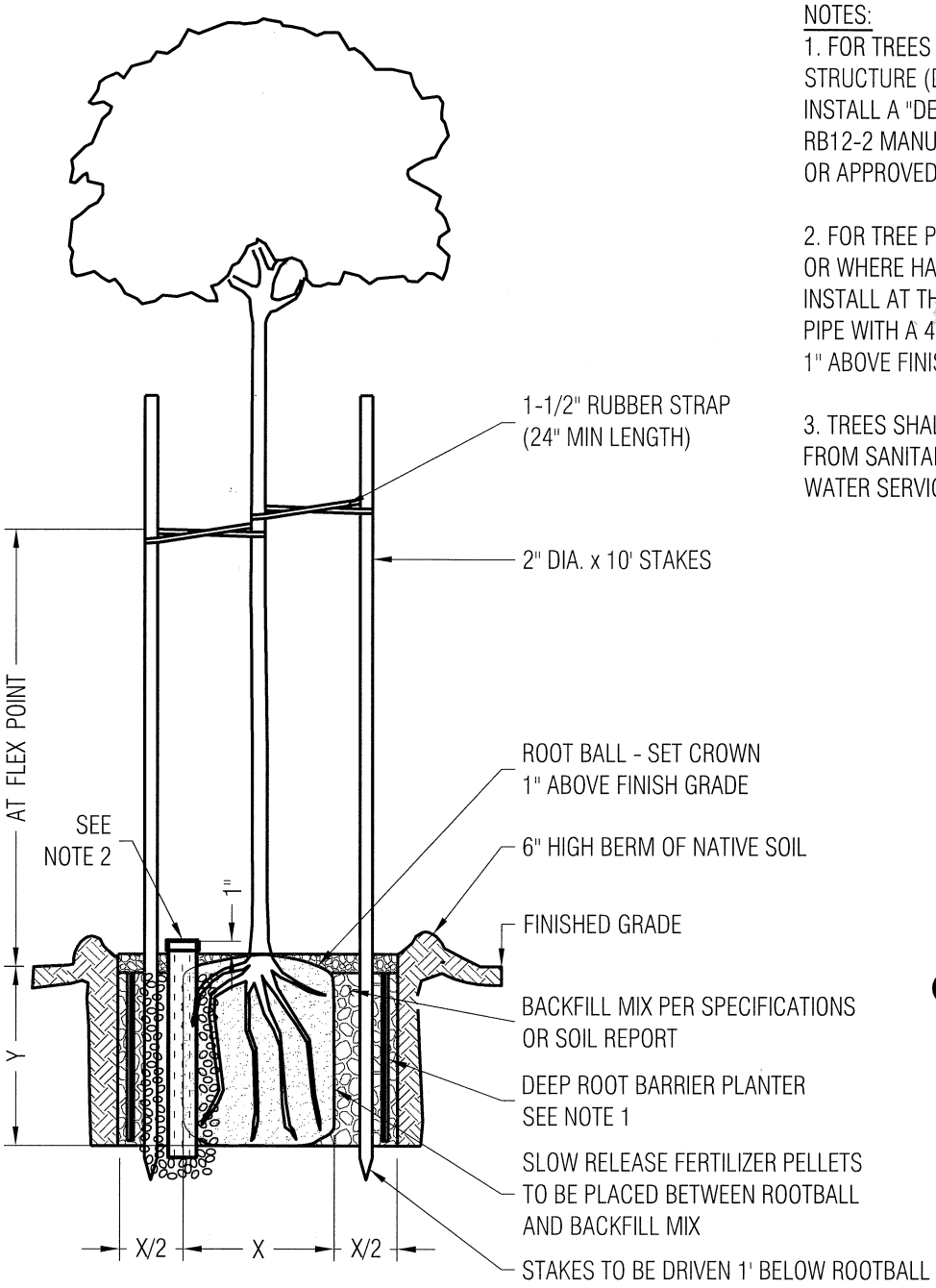

X : DIAMETER OF ROOT BALL
Y : HEIGHT OF ROOT BALL

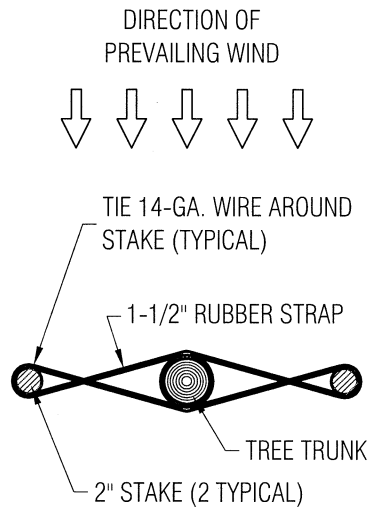

PLAN

Approved: _____ City Engineer 1/4/10 Date

REVISION	
Description	Date

ENGINEERING DIVISION

TREE PLANTING AND STAKING

LI-1

STANDARD DETAILS MAY 2010

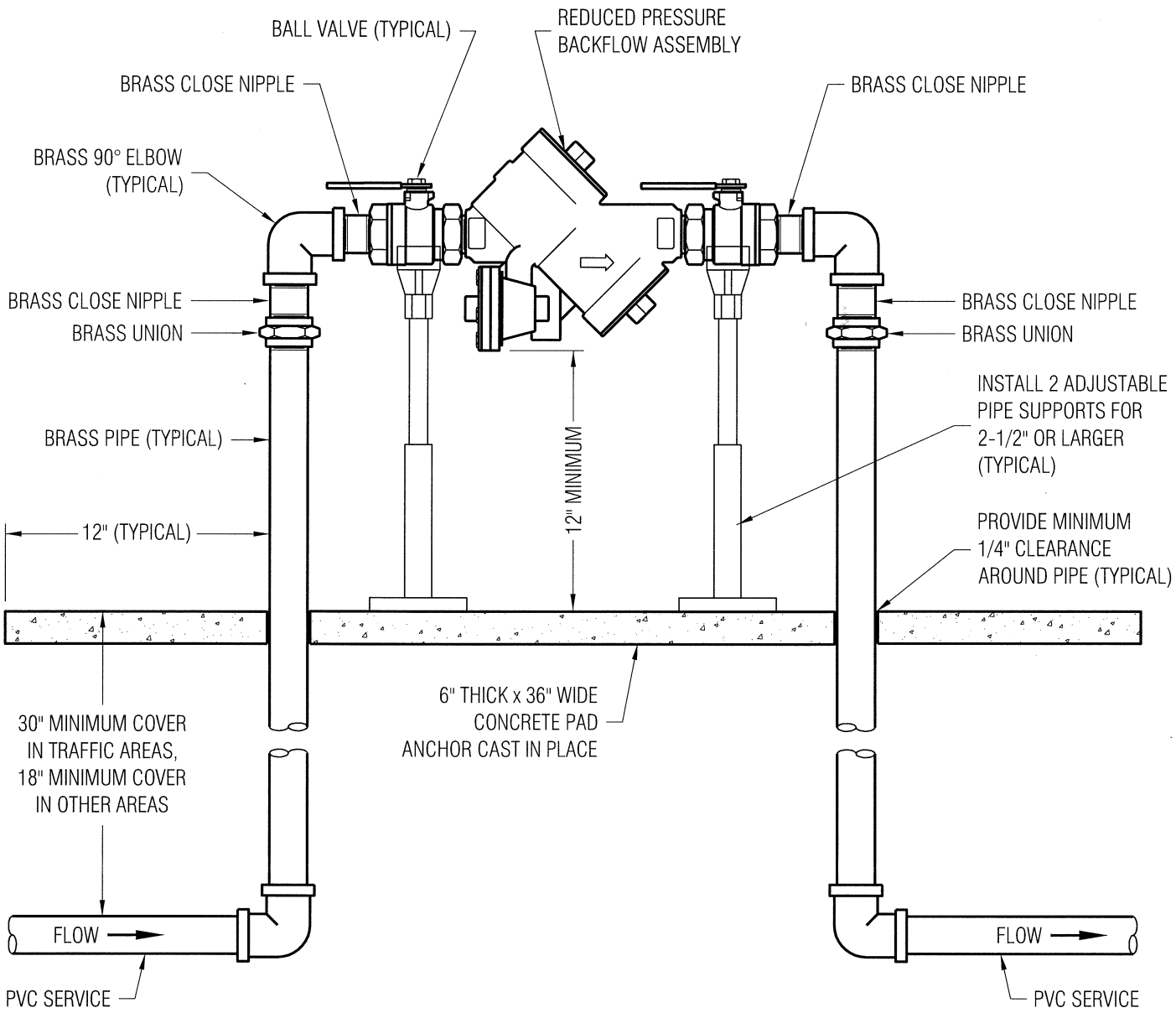

NOTES:

1) BACKFLOW UNITS SHALL BE ON THE "APPROVED BACKFLOW PREVENTION DEVICES" LIST BY THE HEALTH SERVICES AGENCY A DEPARTMENT OF THE PUBLIC HEALTH AND ENVIRONMENTAL PROTECTION DIVISION OF THE COUNTY OF SANTA CLARA

2) SEAL ALL THREADED JOINTS 2" & SMALLER WITH PIPETHREAD SEALANT. FOR LARGER PIPES USE PIPETHREAD SEALANT & TEFLON TAPE

3) APPLY " PROTECTO WRAP " #160H MASTIC TO ALL BURIED GALVANIZED PIPE FITTINGS

Approved: _____ City Engineer 1/4/10 Date

CITY OF LOS ALTOS · CALIFORNIA · INCORPORATED DECEMBER 1 · 1952

REVISION	
Description	Date

ENGINEERING DIVISION

BACKFLOW PREVENTION DEVICE

LI-2

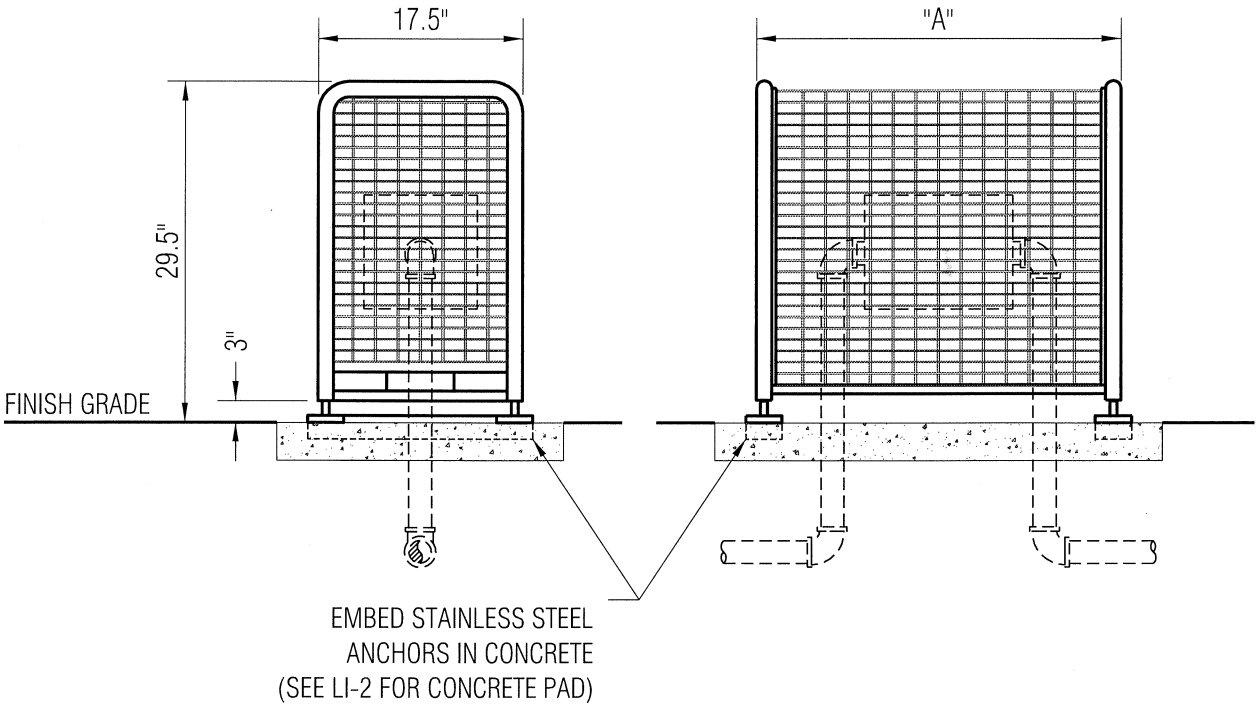

SPECIFICATIONS FOR BACKFLOW ENCLOSURE		
DESCRIPTION	MODEL NO.	DIM. A
V.I.T. PRODUCTS, INC. STRONG BOX ENCLOSURE	SBBC-30CR SBBC-45CR SBBC-75CR	30" 45" 75"
EXPANSION MODULE FOR 30" & 45" ENCLOSURES	EXP-15CR	15"

Approved: _____ 1/4/10
City Engineer Date

CITY OF LOS ALTOS · CALIFORNIA · INCORPORATED DECEMBER 1, 1952

REVISION	
Description	Date

ENGINEERING DIVISION

BACKFLOW PREVENTION ENCLOSURE

LI-3

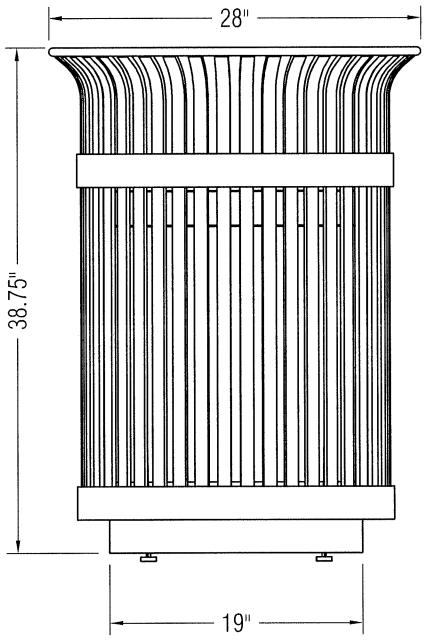

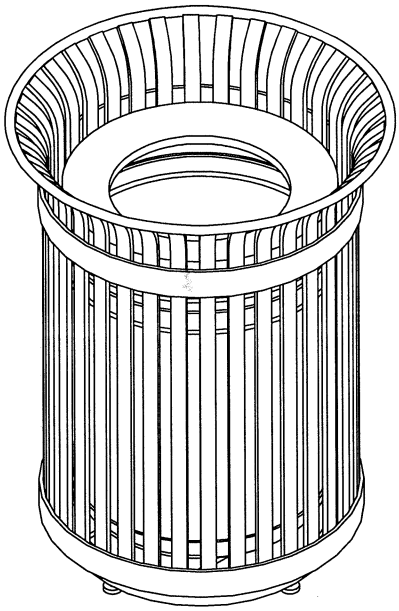

PERSPECTIVE

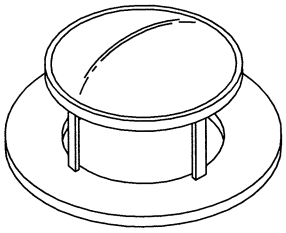

OPTIONAL RAIN BONNET LID
SEE NOTE 2

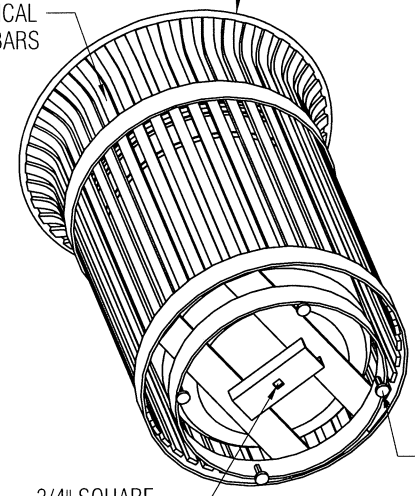

UNDER VIEW

NOTES:
1. VICTOR STANLEY S-42 (36 GAL) OR APPROVED EQUAL GLOSSY BLACK FINISH
2. OPTIONAL RAIN BONNET LID TO BE INSTALLED WHEN LOCATED IN RAIN EXPOSED AREAS

Approved: _____ City Engineer 1/4/10 Date

CITY OF LOS ALTOS · CALIFORNIA · INCORPORATED DECEMBER 1, 1952

REVISION	
Description	Date

ENGINEERING DIVISION

LITTER RECEPTACLE

LI-4

STANDARD DETAILS MAY 2010

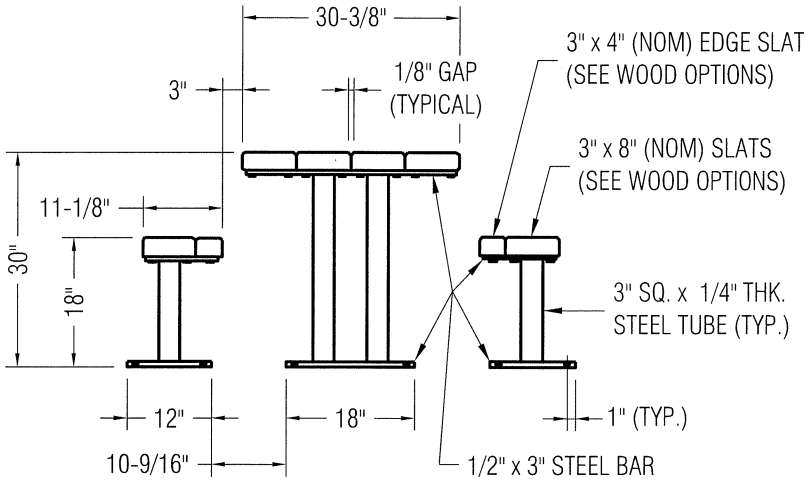

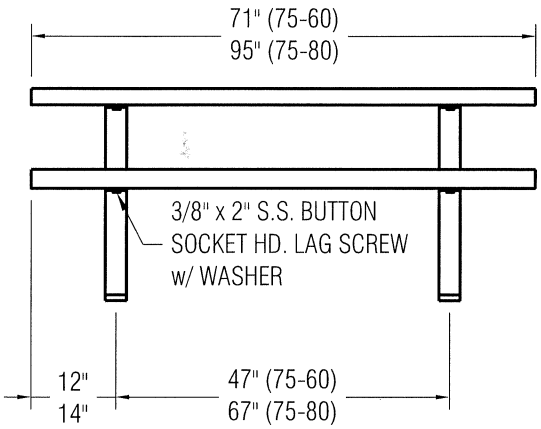

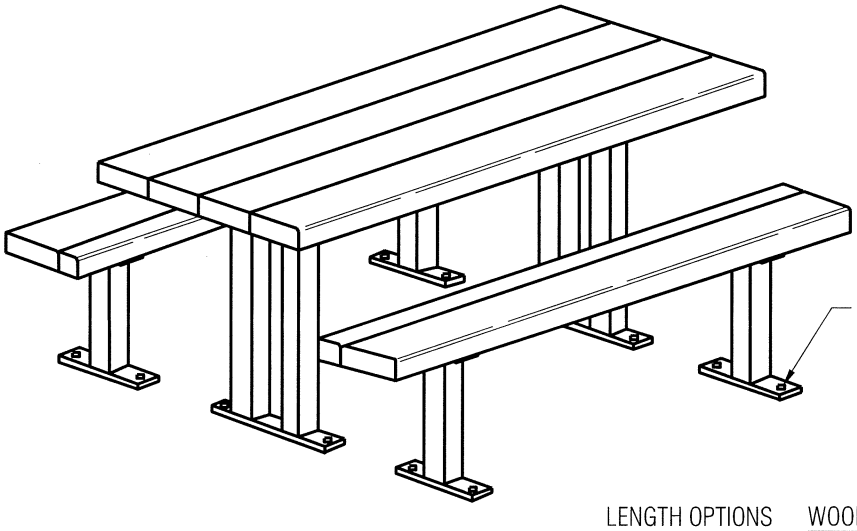

NOTES:

1. DuMor, inc. 75 SERIES PICNIC TABLE OR APPROVED EQUAL
2. ALL STEEL MEMBERS COATED w/ZINC RICH EPOXY THEN FINISHED w/ A BLACK POLYESTER POWDER COATING
3. ALL WOOD MEMBERS TREATED w/ CLEAR PRESERVATIVE

LENGTH OPTIONS

1. 6' TABLE
2. 8' TABLE

WOOD OPTIONS

1. CLEAR ALL HEART REDWOOD S4S EE
2. 'C' & BTR. DOUGLAS FIR KD S4S EE
3. CLEAR WESTERN RED CEDAR S4S EE

Approved: _____ City Engineer 1/4/10 Date

CITY OF LOS ALTOS · CALIFORNIA · INCORPORATED DECEMBER 1, 1952

REVISION	
Description	Date

ENGINEERING DIVISION

PICNIC TABLE

LI-5

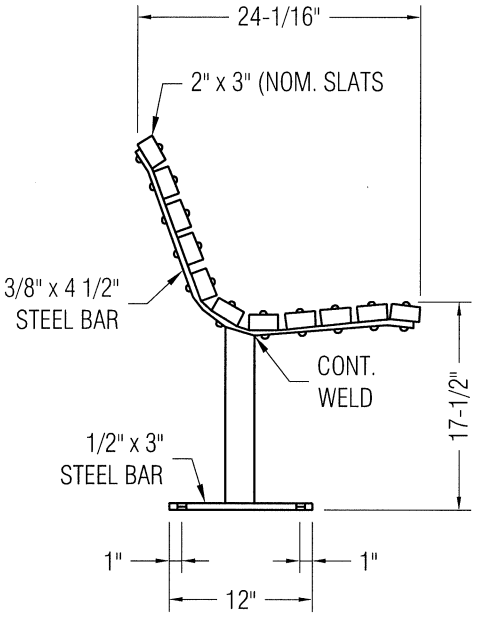

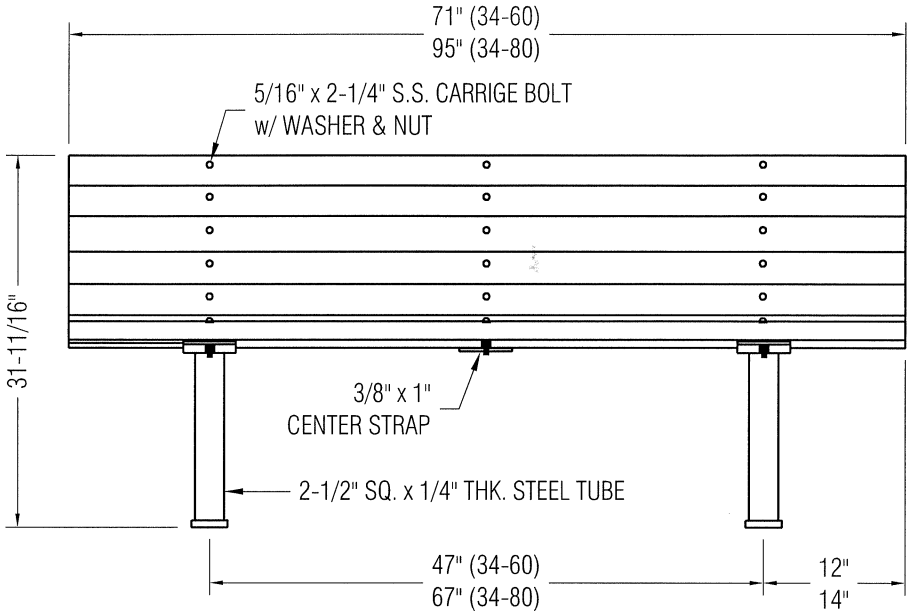

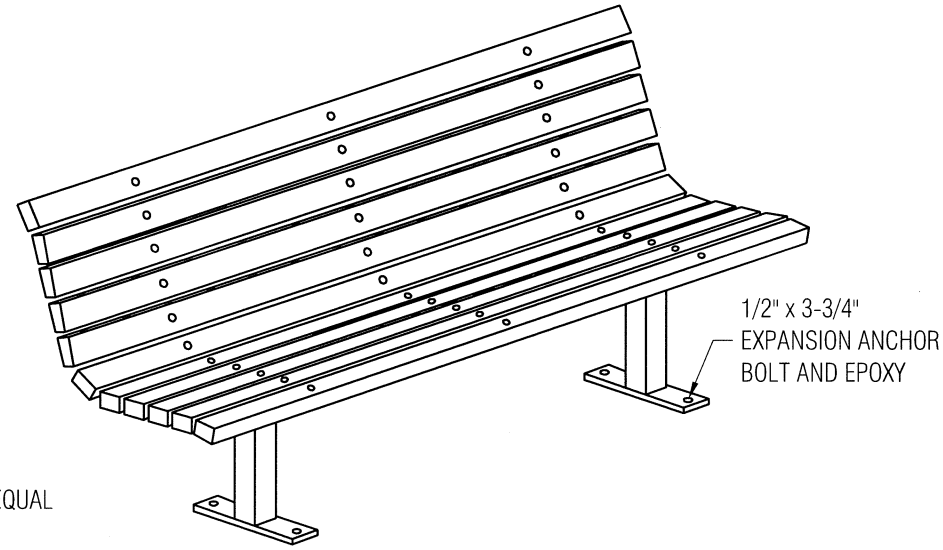

NOTES:

1. DuMor, Inc. 34 SERIES BENCH OR APPROVED EQUAL
2. ALL STEEL MEMBERS SHALL BE FINISHED w/ZINC RICH EPOXY THEN FINISHED w/ A BLACK POLYESTER POWER COATING
3. ALL WOOD MEMBERS SHALL BE TREATED w/ A CLEAR PRESERVATIVE

LENGTH OPTIONS

1. 6' BENCH
2. 8' BENCH

WOOD OPTIONS

1. CLEAR ALL HEART REDWOOD S4S EE
2. 'C' & BTR. DOUGLAS FIR KD S4S EE
3. CLEAR WESTERN RED CEDAR S4S EE

Approved: _____ City Engineer 1/4/10 Date

CITY OF LOS ALTOS · CALIFORNIA · INCORPORATED DECEMBER 1, 1952

REVISION	
Description	Date

ENGINEERING DIVISION

PARK BENCH

LI-6

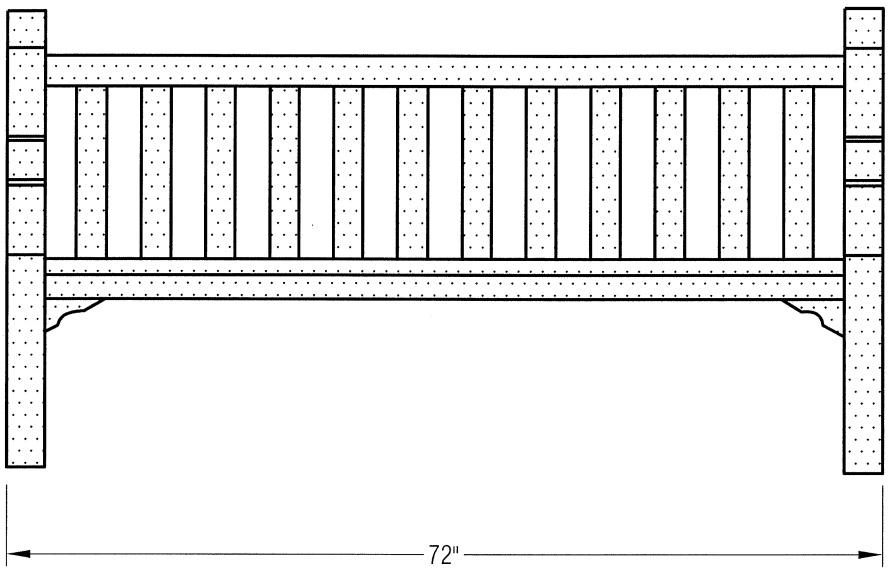

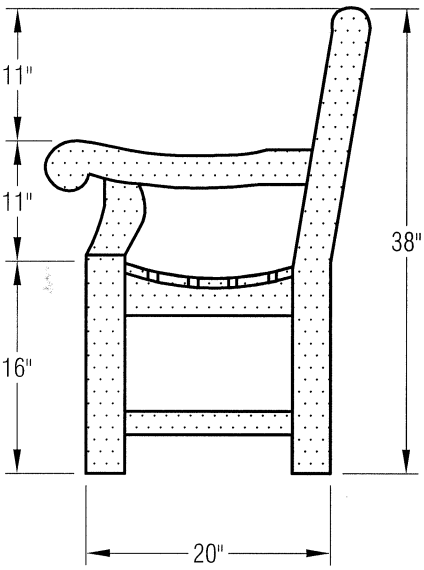

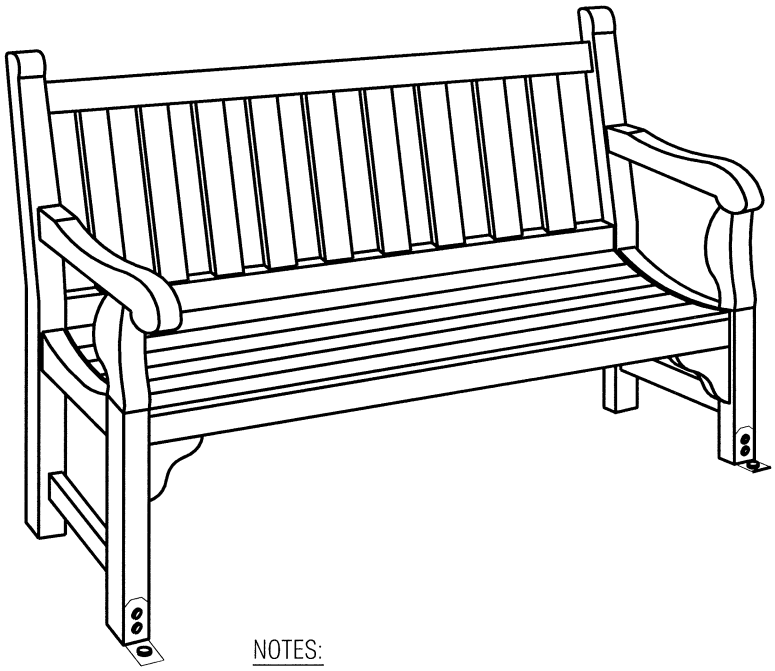

INSTALLATION NOTES:

1. USE 5/8" x 10" ALL-THREAD BOLT INSERTED 6" DEEP INTO CONCRETE WITH EPOXY
2. DRILL 4" INTO BOTTOM OF LEG OF BENCH SLIP OVER ALL-THREAD BOLT
3. ATTACH "L" BRACKET TO LEG AND ATTACH 3/8" x 2-1/2" EXPANSION ANCHOR BOLT INTO CONCRETE WITH EPOXY

NOTES:

1. MONARCH 6', COUNTRY CASUAL, TEAK BENCH OR APPROVED EQUAL (4' BENCH SIMILAR)
2. ALL WOOD MEMBERS TREATED w/ CLEAR PRESERVATIVE

Approved: _____ City Engineer 1/4/10 Date

CITY OF LOS ALTOS · CALIFORNIA · INCORPORATED DECEMBER 1, 1952

REVISION	
Description	Date

ENGINEERING DIVISION

DOWNTOWN BENCH

LI-7

STANDARD DETAILS MAY 2010

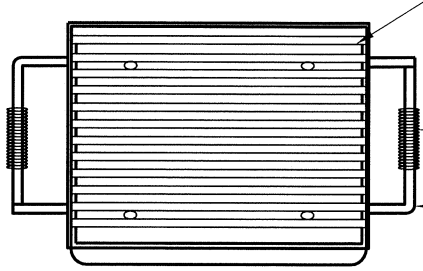

NOTE:
1. GRILL FINISHED w/ HEAT RESISTANT BLACK ENAMEL
2. GRILL ROTATES FREELY 360° FOR DRAFT CONTROL

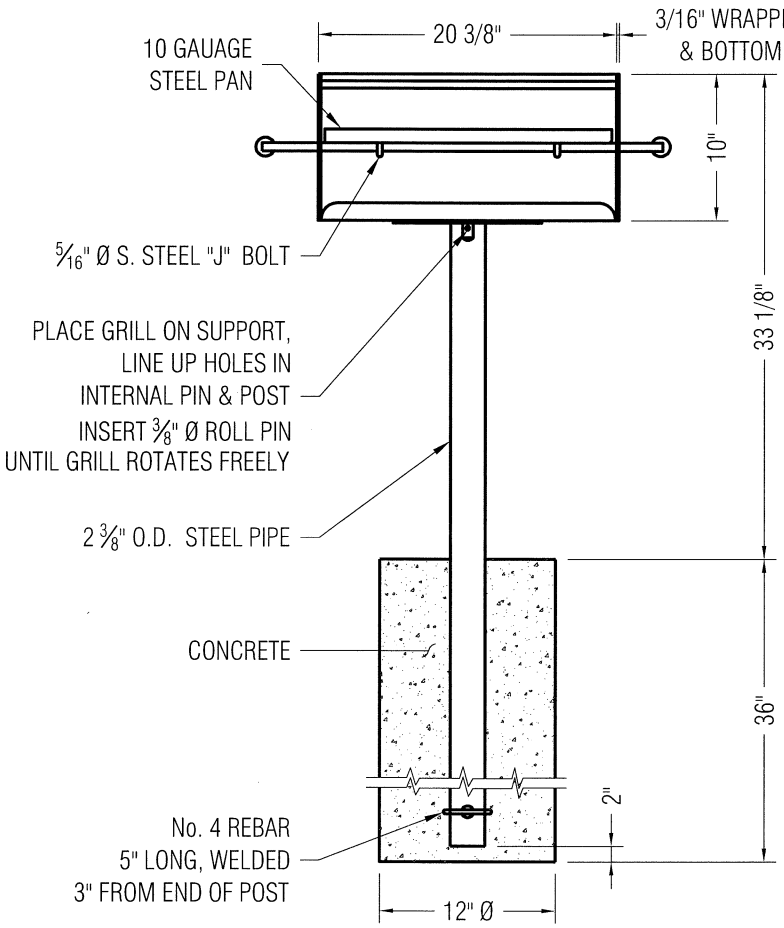

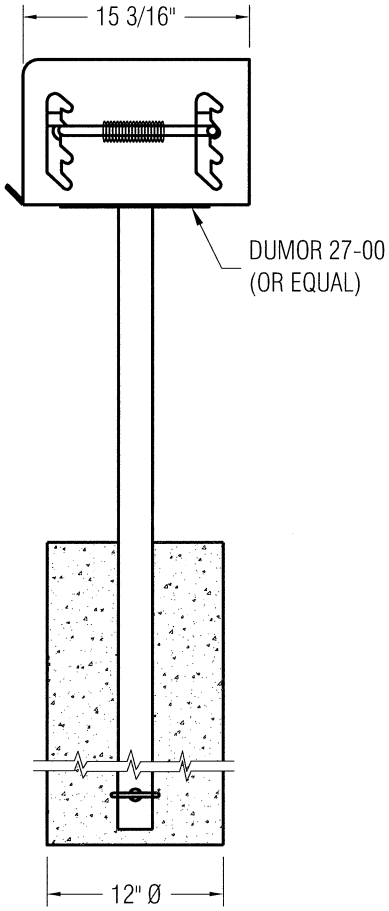

Approved: _____ City Engineer 1/4/10 Date

REVISION	
Description	Date

ENGINEERING DIVISION

PARK GRILL

LI-8

STANDARD DETAILS MAY 2010

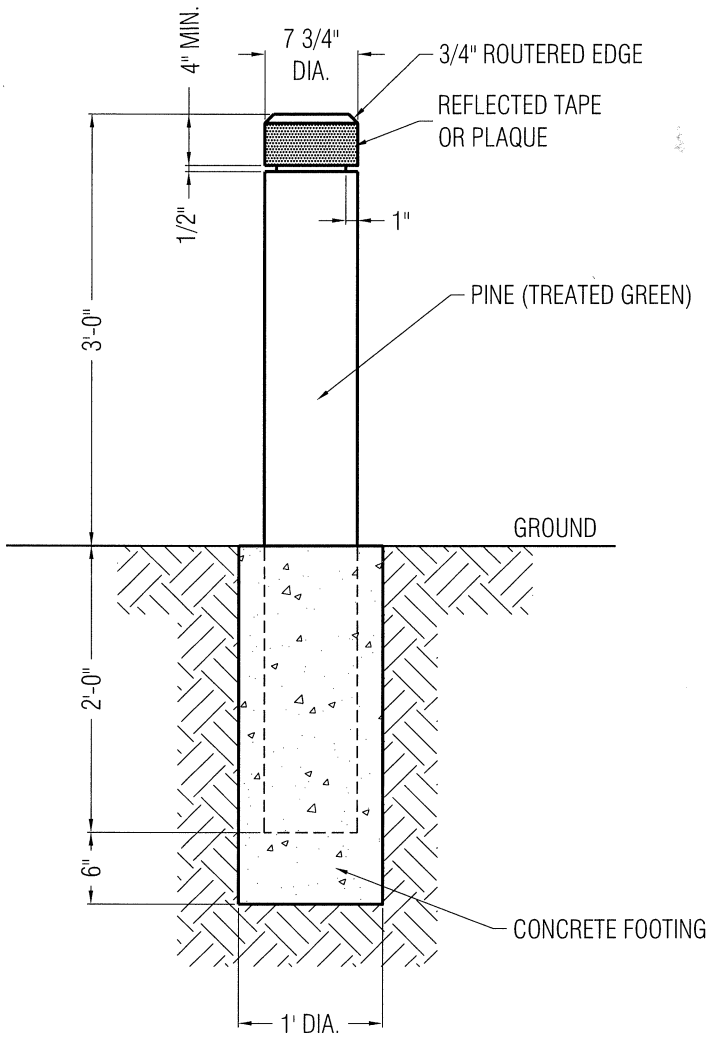

Approved: _____ City Engineer 1/4/10 Date

REVISION	
Description	Date

ENGINEERING DIVISION

FIXED BOLLARD

LI-9

STANDARD DETAILS MAY 2010

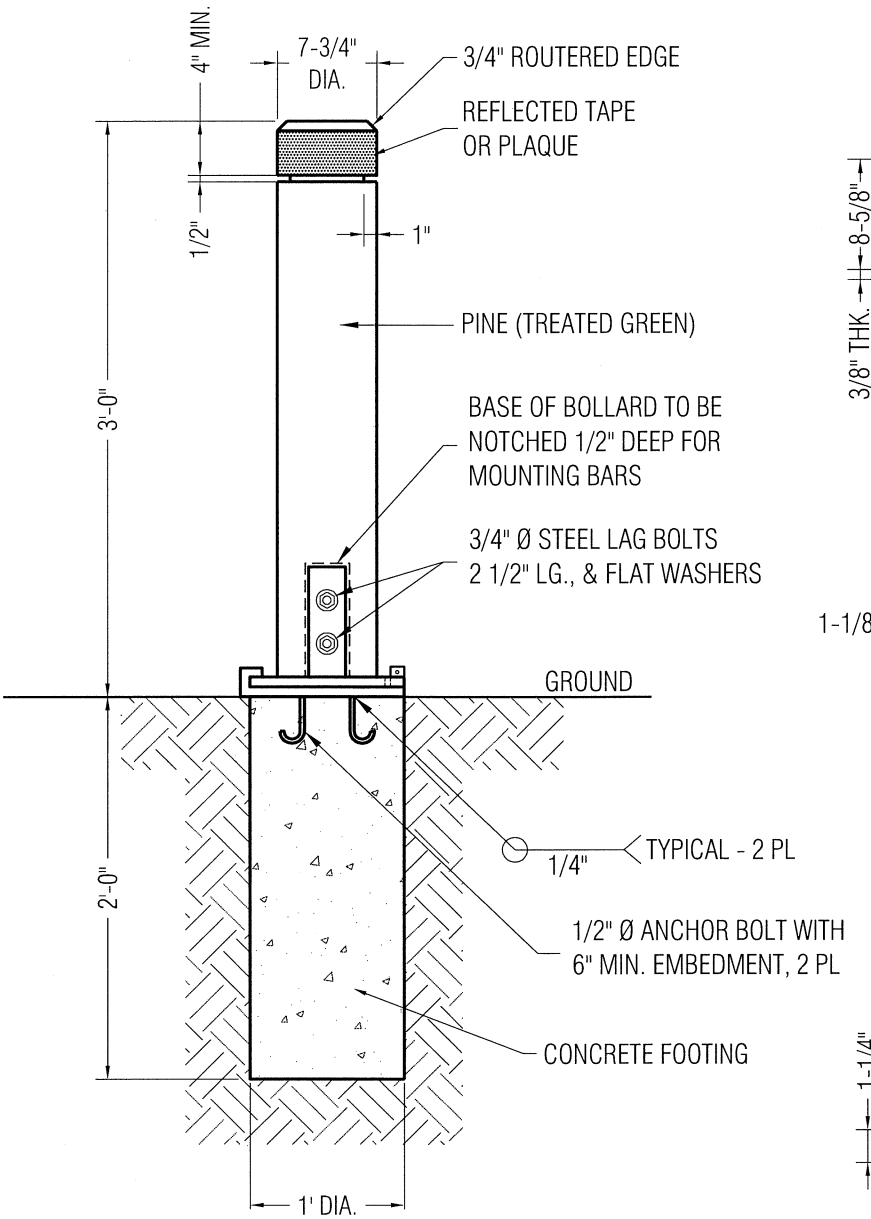

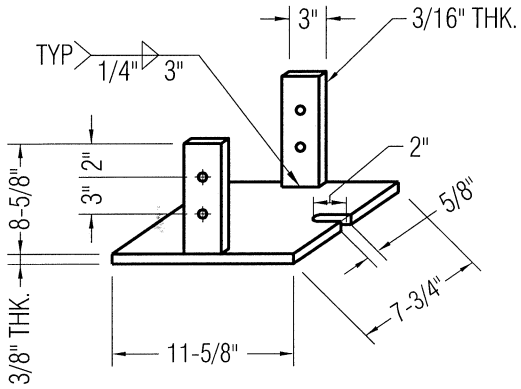

MOUNTING PLATE

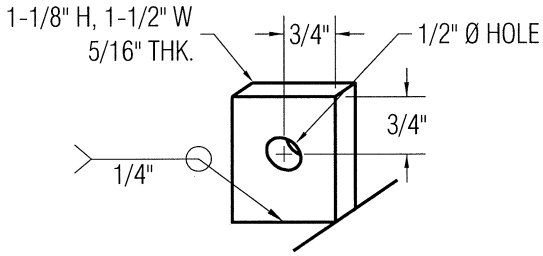

PADLOCK POST

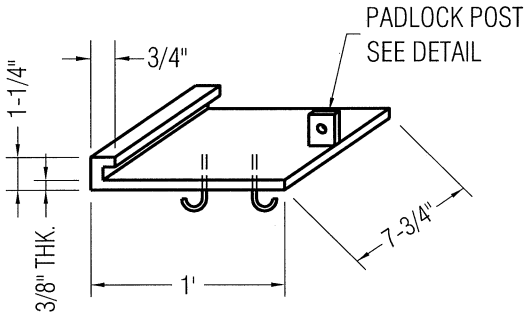

MOUNTING PLATE BASE

NOTE:
ALL METAL ITEMS SHALL BE MADE OF GALVANIZED STEEL

Approved: 1/4/10
City Engineer Date

CITY OF LOS ALTOS · CALIFORNIA · INCORPORATED DECEMBER 1, 1952

REVISION	
Description	Date

ENGINEERING DIVISION

REMOVABLE BOLLARD

LI-10

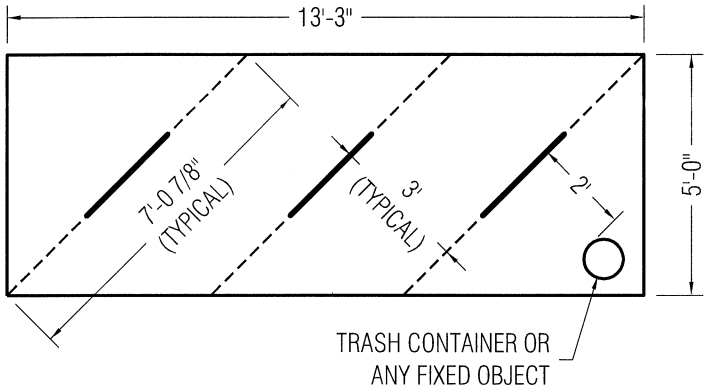

PLAN VIEW

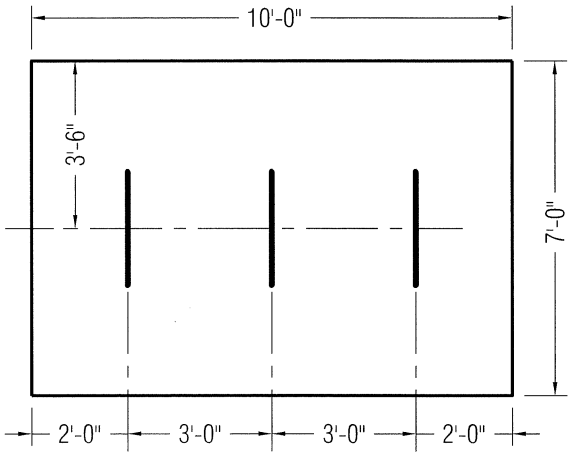

PLAN VIEW

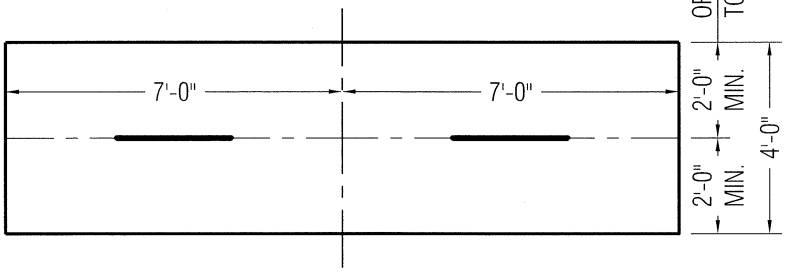

PLAN VIEW

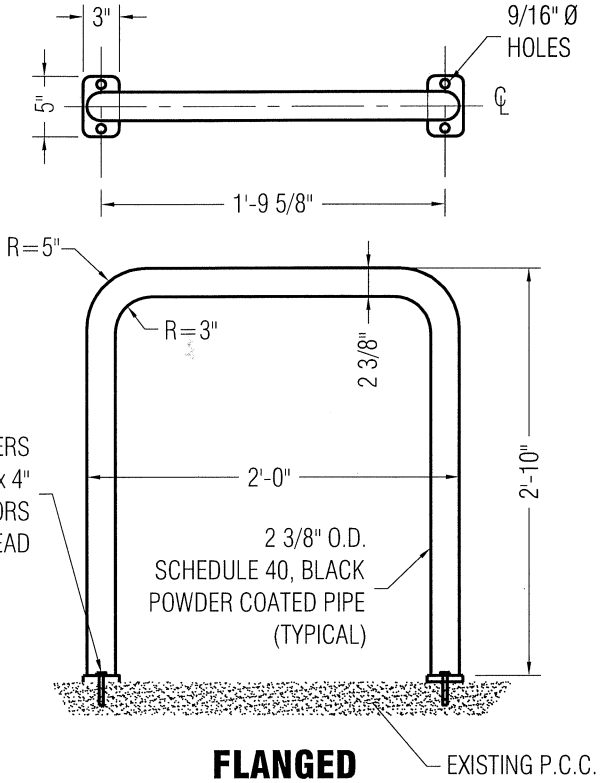

FLANGED

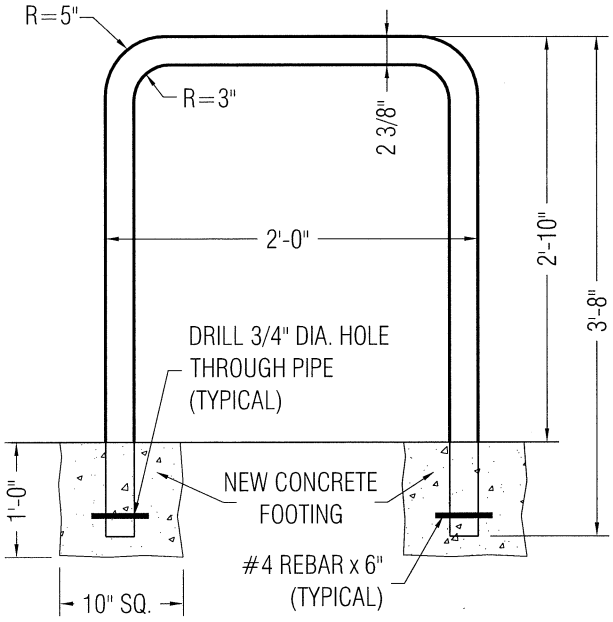

IN GROUND

Approved: _____ City Engineer 1/4/10 Date

REVISION	
Description	Date

ENGINEERING DIVISION

BICYCLE RACK DETAILS AND INSTALLATION PLANS

LI-11

STANDARD DETAILS MAY 2010

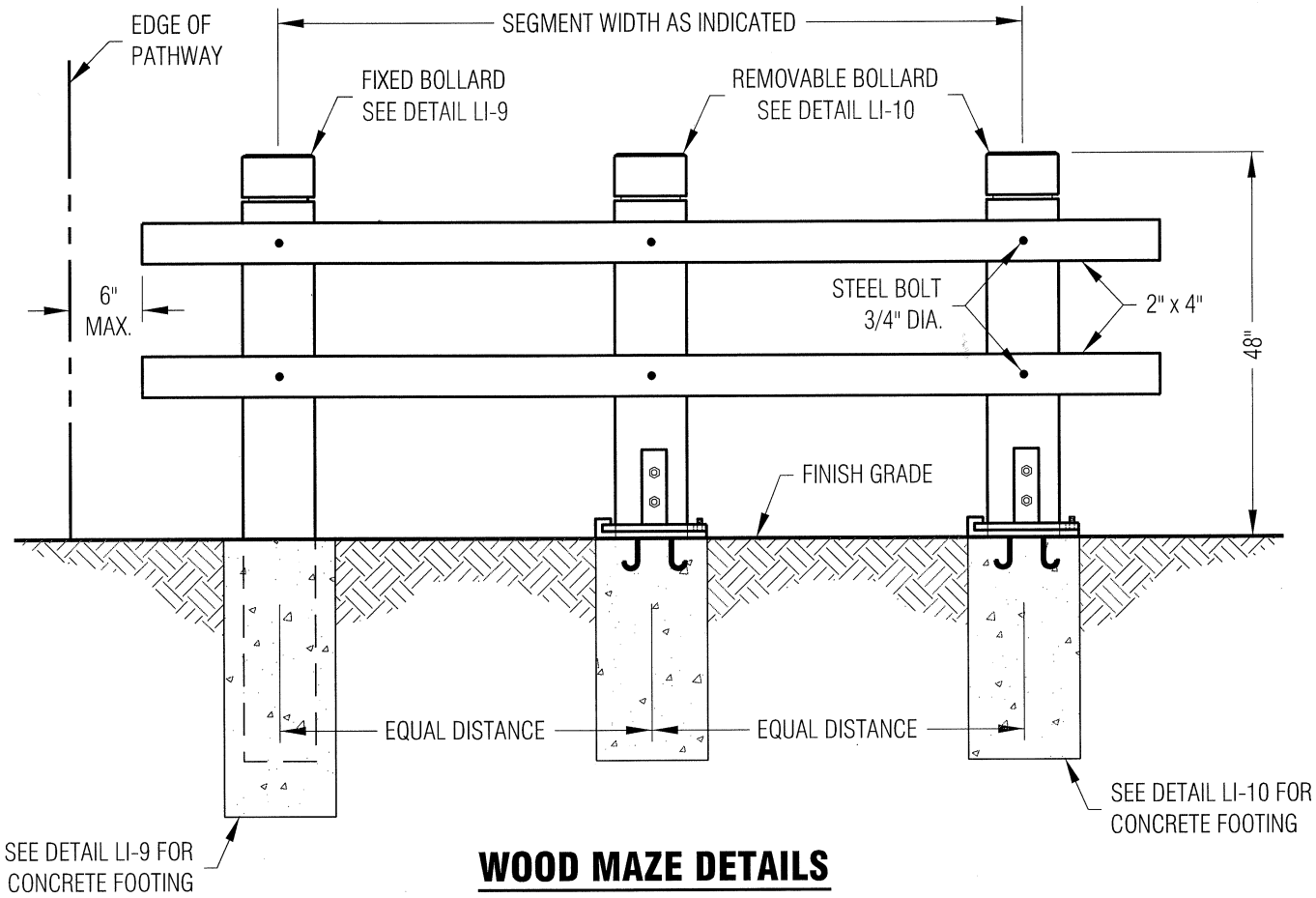

WOOD MAZE DETAILS

SEE DETAIL LI-9 FOR CONCRETE FOOTING

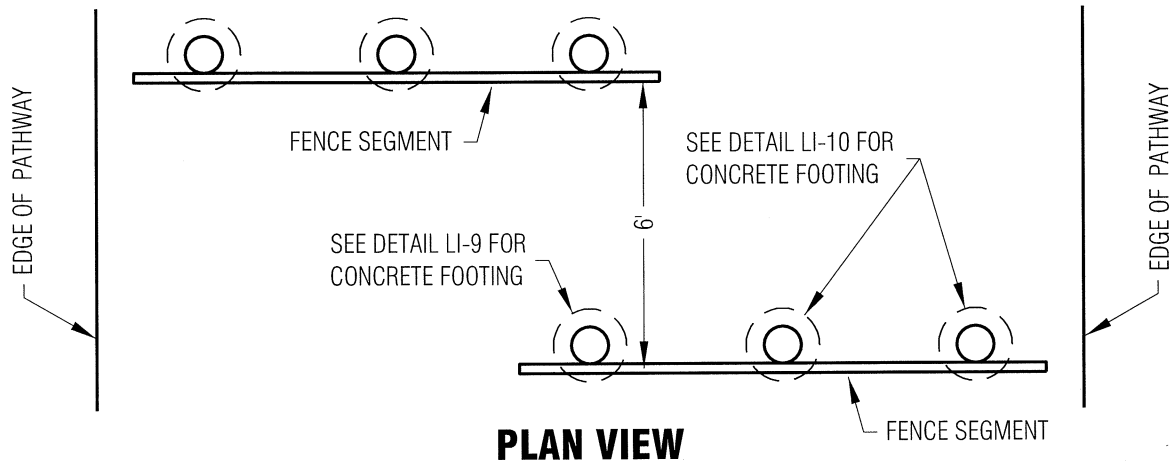

PLAN VIEW

Approved: _____ City Engineer 1/4/10 Date

REVISION	
Description	Date

ENGINEERING DIVISION

WOOD MAZE DETAILS

LI-12

CITY OF LOS ALTOS · CALIFORNIA · INCORPORATED DECEMBER 1 · 1952

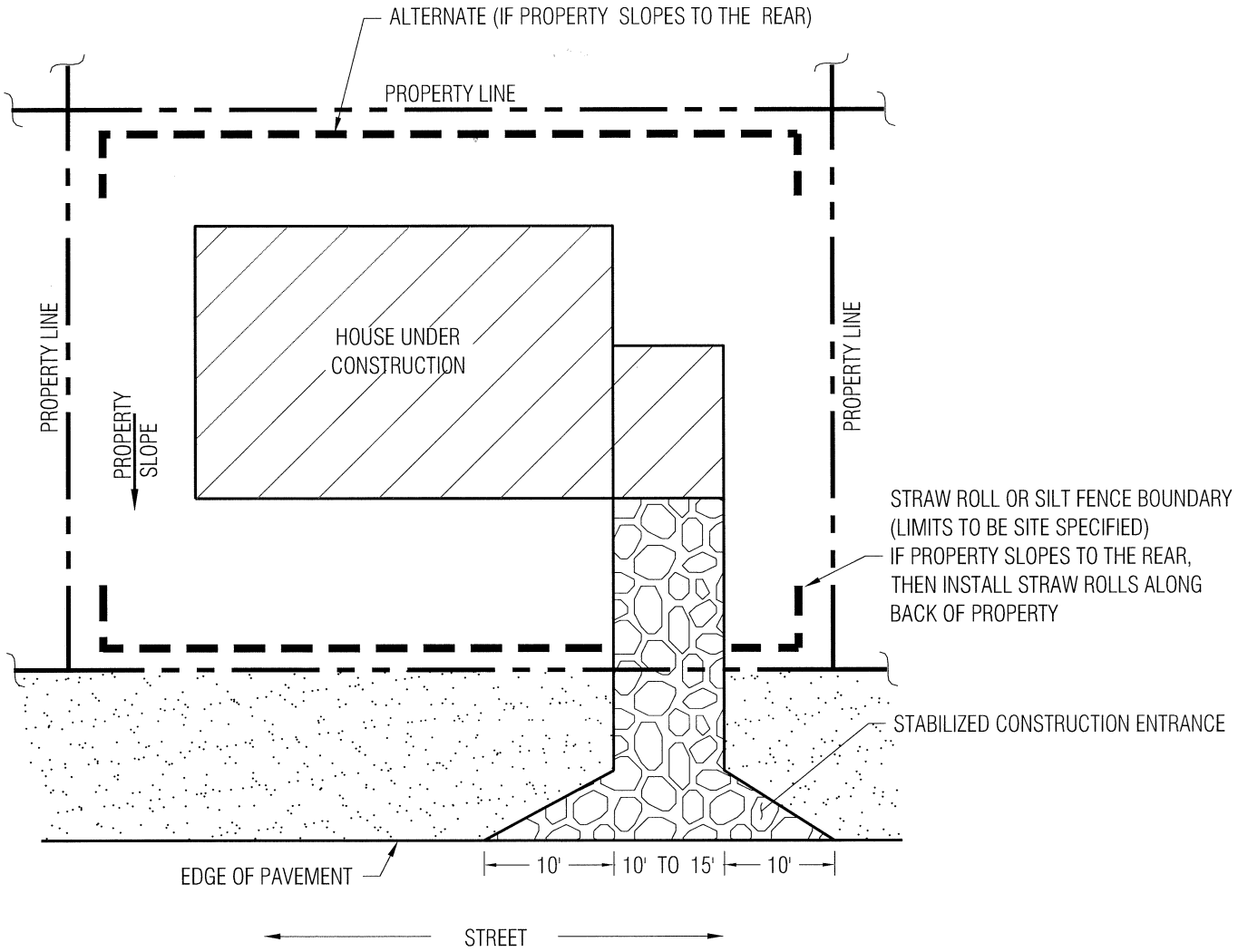

GENERIC CONSTRUCTION SITE PLAN

Approved: _____ City Engineer 1/4/10 Date

REVISION	
Description	Date

ENGINEERING DIVISION

TYPICAL EROSION AND SEDIMENT CONTROL AT SINGLE FAMILY CONSTRUCTION SITE

EC-1

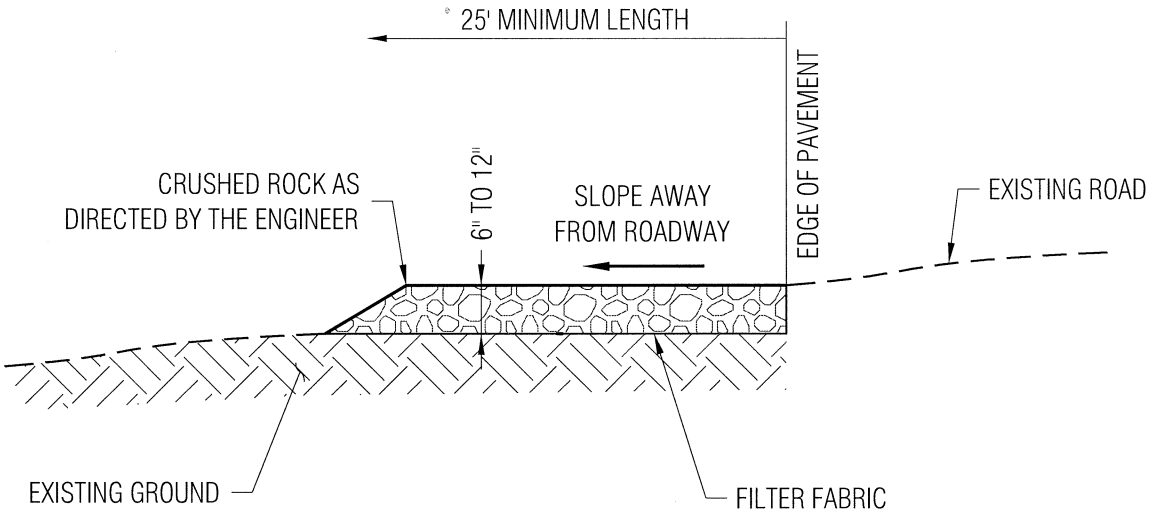

NOTES:

1. PROVIDE A FANNED STABILIZED CONSTRUCTION ENTRANCE TO ACCOMODATE THE TURNING RADIUS OF CONSTRUCTION EQUIPMENT ON AND OFF THE PUBLIC STREET

2. INSTALL STABILZED CONSTRUCTION ENTRANCE ALONG NEW DRIVEWAY CORRIDOR FOR THE FULL PROPOSED WIDTH

Approved: _____ City Engineer 1/4/10 Date

CITY OF LOS ALTOS · CALIFORNIA · INCORPORATED DECEMBER 1 · 1952

REVISION	
Description	Date

ENGINEERING DIVISION

STABILIZED CONSTRUCTION SITE ENTRANCE

EC-2

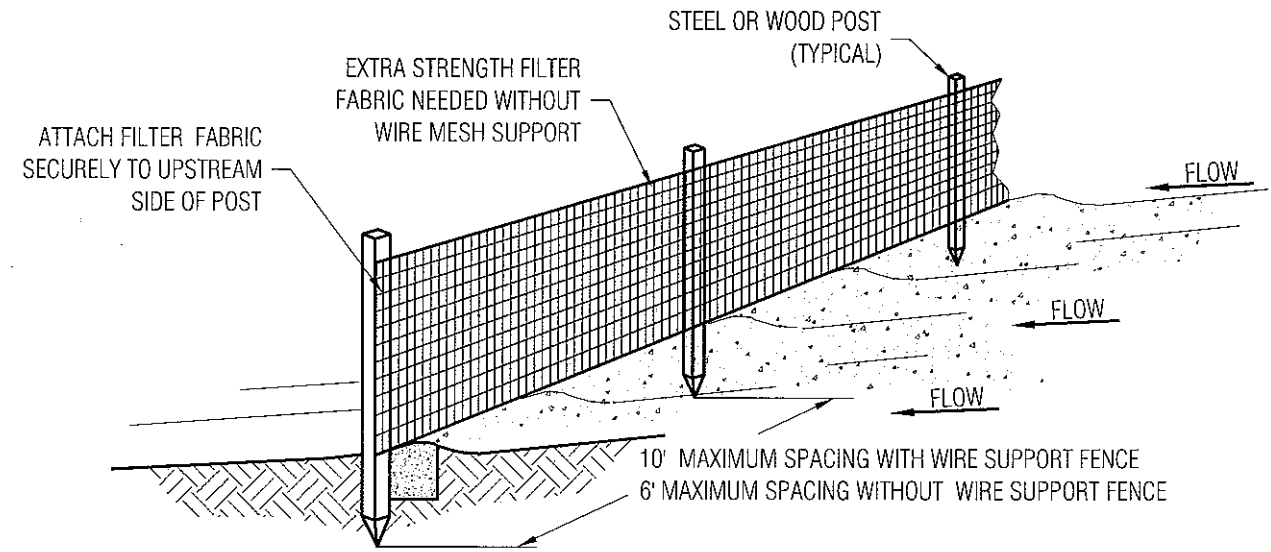

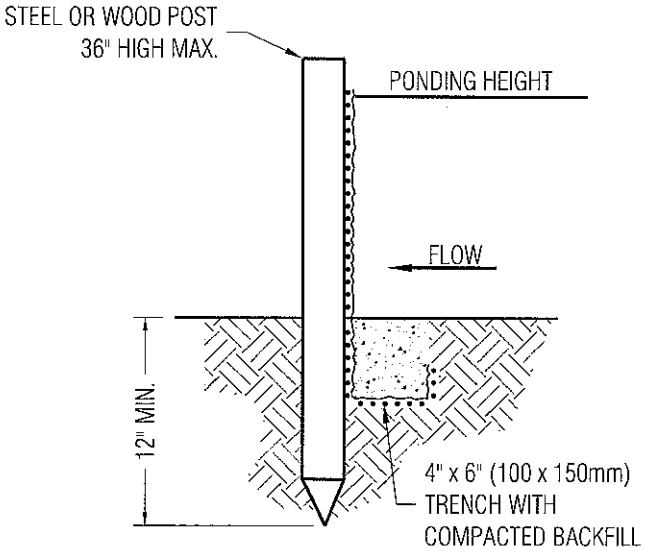

STANDARD DETAIL
TRENCH WITH NATIVE BACKFILL

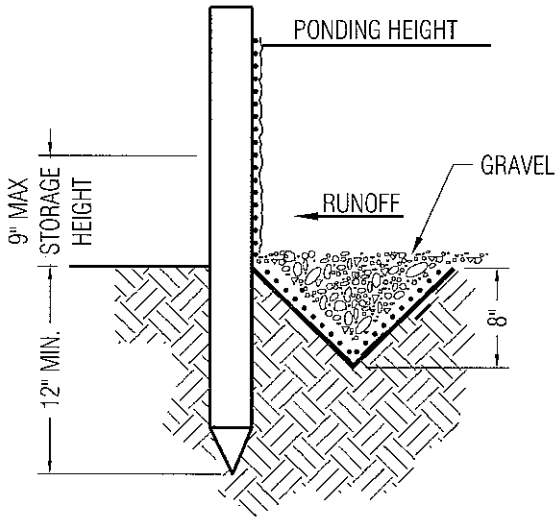

ALTERNATE DETAIL
TRENCH WITH GRAVEL

NOTES:

1. INSPECT AND REPAIR FENCE AFTER EACH STORM EVENT AND REMOVE SEDIMENT WHERE NECESSARY
2. REMOVED SEDIMENT SHALL BE DEPOSITED IN AN AREA THAT WILL NOT CONTRIBUTE SEDIMENT TO RUN OFF-SITE AND CAN BE PERMANENTLY STABILIZED
3. SILT FENCE SHALL BE PLACED ON SLOPE CONTOURS TO MAXIMIZE PONDING EFFICIENCY

Approved: _____ City Engineer 1/4/10 Date

CITY OF LOS ALTOS · CALIFORNIA · INCORPORATED DECEMBER 1 · 1952

REVISION	
Description	Date

ENGINEERING DIVISION

SILT FENCE

EC-3

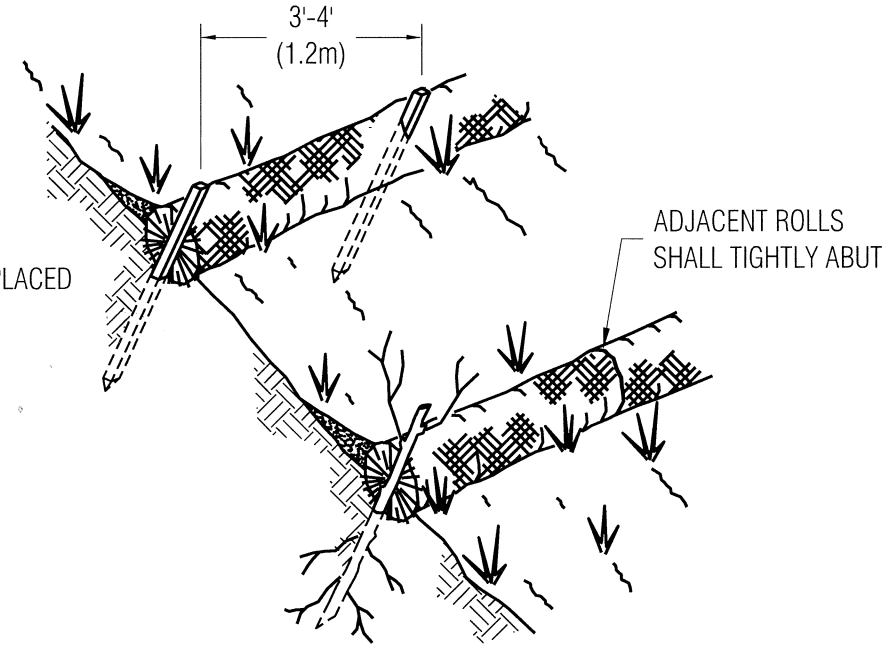

NOTE:
STRAW ROLLS MUST BE PLACED
ALONG SLOPE CONTOURS

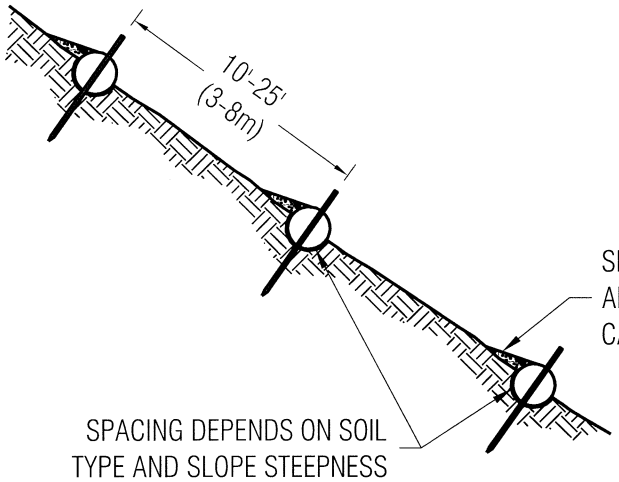

SEDIMENT, ORGANIC MATTER,
AND NATIVE SEEDS ARE
CAPTURED BEHIND THE ROLLS

SPACING DEPENDS ON SOIL
TYPE AND SLOPE STEEPNESS

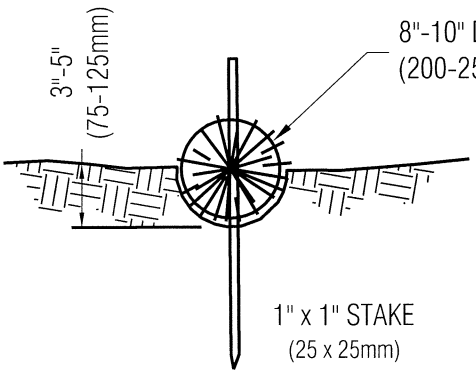

NOTES:

1. STRAW ROLL INSTALLATION REQUIRES THE PLACEMENT AND SECURE STAKING OF THE ROLL IN A TRENCH, 3"-5" (75-125mm) DEEP, DUG ON CONTOUR. RUNOFF MUST NOT BE ALLOWED TO RUN UNDER OR AROUND ROLL

2. VERTICAL SPACING FOR SLOPE INSTALLATIONS
   1:1 SLOPES = 10 FEET APART
   2:1 SLOPES = 20 FEET APART
   3:1 SLOPES = 30 FEET APART
   4:1 SLOPES = 40 FEET APART
   <4:1 SLOPE = ONE ROW AT LOW POINT

3. REMOVED SEDIMENT SHALL BE DEPOSITED IN AN AREA THAT WILL NOT CONTRIBUTE SEDIMENT TO RUN OFF-SITE AND CAN BE PERMANENTLY STABILIZED

Approved: _____ 1/4/10
City Engineer Date

CITY OF LOS ALTOS · CALIFORNIA · INCORPORATED DECEMBER 1 · 1952

REVISION	
Description	Date

ENGINEERING DIVISION

STRAW ROLLS

EC-4